SECOMP

CATALOG 2021/2022



roline®
Designed for Professionals

Value®



roline®
green



roline®
Designed for Professionals





Value®



roline®
GOLD

Hobbes®
INNOVATION





IT–Accessories | Network Components | Office Equipment

www.secomp-international.com

Catalog 2021/2022

Dear Customers!

After more than 27 years SECOMP International AG is well known in the European market for its

- PROFESSIONAL PRODUCTS FOR PROFESSIONAL USERS
- Offered BENEFITS (Packings with EAN-Code and 6-Language-Sticker • Methodical Quality Inspections for all Products • 2 Years Warranty for all ROLINE Products • Free Marketing and Technical Support • All Products available from Stock • Bonded Warehouse • Best Prices)

Besides the existing Brands (**ROLINE, ROLINE GOLD** and **VALUE**) we have decided to create a new one:
- ROLINE GREEN for an eco-friendly environment. Like the already existing ROLINE products, **ROLINE GREEN** fulfils the same high quality standards and on top it is environmentally friendly marked only with a paper tag and produced with TPE or LSOH materials without PVC, delivered without plastic bags and without plastic cable straps.

With our new product catalogue 2021/2022 we are offering, also during this Corona influenced time, an actual overview of our product assortment and brands in form of a paper catalogue.

We would like to say THANK YOU in advance for supporting **SECOMP** also in the future and we will never stop to offer you best possible service.

Your
SECOMP International AG Team

Our Administration Team



Leonarda Moccia
Executive Assistant



Annalena Greulich
Export Administration



Mathias Spörr
Shipping Department

Our Manager Team



José Horstman
Export Manager



Stefan Petri
Product Manager



Marius Sava
Product Manager



ROLINA
Our charming Mascot



Valued Customer OUR Commitment to YOU!



Product Selection

All products are acquired from established and experienced manufactures across the globe, which lead the way within the computer accessory industry.

To a large extent they are produced according to our internal specifications.
Our products comply with all relevant technical requirements including the RoHS, REACH, WEEE & CE regulations.

Quality Control

All our products are tested systematically according to DIN-ISO 2859 rules. They are tested under real working conditions, which shows confidence in the quality of product we supply to the trade.

On Stock

All catalogue products are on stock or will be available within a short period of time.

Competitive Price

High purchasing volume and long-term relationships with highly specialised manufactures gives you the advantage to buy always at competitive prices 'value for money'.

Service & Support

We provide assistance and guidance for technical questions & product enquiries regarding our entire Computer Accessory product portfolio.

roline®
Designed for Professionals

A Brand that you can trust!

ROLINE products are developed for professional users and differ considerably in their quality from comparable products in the IT environment. Their high compatibility in combination with other devices is excellent. Ideally for use in industrial environment.
ROLINE branded products come with a 2-year warranty.

roline® GOLD

ROLINE GOLD — stands for high quality without any compromises!

To meet even the most demanding requirements, we have improved our PC and multimedia cables of our own brand ROLINE and launched our product line ROLINE GOLD already years ago in terms of shielding and contact safety in an even higher quality.
ROLINE GOLD products come with a 2-year warranty.

Value®

Best Value for Money!

Quality products and highly aggressive pricing makes the VALUE range ideally suited for Distribution Partners.
All VALUE products are supplied with a 1-year warranty.

roline® green

NEW

Environment-friendly

A range of known ROLINE quality products marked only with a paper tag and build with TPE or LSOH material, without plastic bags and without plastic cable straps for use in eco-friendly environments.

ROLINE GREEN products come with a 2-year warranty.

Quality and Service Performance

CONTENTS - 11 product chapters providing easy selection.

N



NEWSSHOP - New Products

ROLINE GREEN Products ..... NEW.2 — NEW.4
ROLINE GREEN Network Cables NEW.2
ROLINE GREEN USB Cables NEW.2, NEW.3
ROLINE GREEN HDMI Cables NEW.3
ROLINE GREEN DisplayPort Cables NEW.4
ROLINE GREEN DisplayPort to HDTV Cables NEW.4
ROLINE Adapter HDMI to DisplayPort NEW.5
VALUE USB Wall Charger NEW.5
ROLINE PC Standing Workstation NEW.6
ROLINE Cable Underdesk Organizer NEW.6

1



Network Components / Cables

Fast- / Gigabit Ethernet Converter / Hub 1.02
Fast- / Gigabit Ethernet Switches ..... 1.03 – 1.07
Media Converters ..... 1.04 – 1.05, 1.11 – 1.13
PoE Injectors / PoE Switches ..... 1.05 – 1.09
Industrial Networking ..... 1.10 – 1.13
TP Cables Overview ..... 1.14 – 1.15
Installation Cables ..... 1.16 – 1.19
Patch Cords ..... 1.20 – 1.33
Patch Panels ..... 1.34 – 1.36
Patch Cables Management ..... 1.41, 1.47 – 1.51
Mount Boxes ..... 1.36 – 1.37
Modular Plugs, Couplers, Junction Boxes, Keystones ..... 1.38 – 1.40, 1.42 – 1.46
Fibre Optic Jumper Cables ..... 1.52 – 1.57
FO Cleaning Accessories 1.58
FO Adapter 1.59
MPO Cabling System 1.60
19" LCD KVM Consoles 1.61
19" Wall Cabinets 1.62

2



Switchboxes / Hubs

"Star" KVM Switches 2.02
19"Desktop" KVM Switches 2.03
19" KVM Switches ..... 2.04 – 2.05
19" LCD KVM Switches ..... 2.04 – 2.05
KVM DisplayPort Switches 2.06
KVM HDMI Switches ..... 2.06 – 2.07
KVM Extenders 2.07, 2.08, 2.09
KVM DVI Switches / Extender 2.08
Manual USB Switches ..... 2.09 – 2.10
USB 2.0 / 3.2 Gen 1 / 2 Hubs ..... 2.10 – 2.14

3



Computer Cables / Connectors / Adapters

ROLINE - THE difference ..... 3.02 – 3.03
USB Cables ..... 3.04 – 3.12, 3.28 – 3.29
USB Extenders ..... 3.08 – 3.10
9-pole / 25-pole / Serial / -Link Cables 3.14
Printer Cables, parallel 3.14
Keyboard Cables PS/2 ..... 3.15
Monitor Connection Cables VGA ..... 3.15 – 3.16
Monitor Connection Cables DVI ..... 3.16 – 3.17, 3.30 – 3.31
HDMI Cables ..... 3.17 – 3.21, 3.32 – 3.33
DisplayPort Cables ..... 3.22 – 3.27, 3.33
Thunderbolt Cables 3.24
Adapters VGA/DVI/HDMI/DP ..... 3.31, 3.34 – 3.38
USB Type C Display Adapters ..... 3.37 – 3.38, 3.40
Type C Audio Cables ..... 3.42 – 3.44
Audio / Video Cables / Adapters ..... 3.44 – 3.45
SATA Cables ..... 3.46 – 3.48
Internal Power Cables 3.48
Power Cords ..... 3.49 – 3.53
Telephone Cables / Accessories, Ferrites 3.54
Gender Changers 3.13, 3.55
Adapters / Converters ..... 3.55 – 3.60

4



Peripheral Devices

I/O Cards 4.02
Card Readers 4.03
HDD Docking Station 4.03
HDD Enclosures 4.03, 4.04
Mouses 4.04
Mouspads 4.04
Mounting Material 4.05
19" Industrial Server Chassis 4.05, 4.06

5



Mobile Computing

Fast- / Gigabit Ethernet Converter / Hub 5.02
Sync- & Charging Adapters 5.03
Sync- & Charging Cables ..... 5.04 – 5.05
USB Hubs 5.06
Docking Stations ..... 5.06 – 5.13
3.5mm Audio Adapters 5.14, 5.15
USB Charger ..... 5.16 – 5.18
Stand / Holder for Tablet 5.16
Security Locks 5.16
Charging Station 5.17
Wireless Charging 5.18

6



Multimedia

USB Display Adapters 6.02
Audio/Video Extenders over TP ..... 6.02 – 6.04
VGA / DP / HDMI Extenders ..... 6.02 – 6.04
Wireless HDMI Audio/Video Systems 6.04
UHD HDMI Active Cables ..... 6.05 – 6.07
Audio/Video Splitters ..... 6.08 – 6.10
Audio/Video Switches 6.11
HDMI Matrix Switches 6.12
Audio Extractor 6.13
Audio Adapters / Converters 6.13
Headsets 6.14
HDMI Emulator 6.14
Multimedia Audio/Video Modules 6.14

7



UPS Systems / Power Distribution

Line-Interactive UPS ..... 7.02 – 7.03
Online UPS 7.03
Power Strips ..... 7.04 – 7.05
USB Wall Mount Chargers ..... 7.05 – 7.06
USB Power Stations 7.06
USB Car Chargers 7.07
Universal Power Adapters 7.07
IP Power Strip / Remote Switch 7.08
PDU for Cabinets 7.09
Power Cords ..... 7.10 – 7.14

8



Test / Measurement / Tools

Cable Testers / Network Tools ..... 8.02 – 8.03
Non-Contact Voltage Tester 8.02
HOBBES Products ..... 8.02 – 8.04
Crimping Pliers / Tools ..... 8.05 – 8.06
Fiber Optic Cleaning Tools 8.07
Inspection Camera 8.09
Service Kits ..... 8.08 – 8.11
Cable Ties / Installation Tools / Clips 8.12
Cable Tunnel Organizers 8.12

9



Office Equipment / Consumables

Mouse Pads 9.02
Wristrests 9.02
VESA Adapters 9.03
LCD Monitor Arms / Mounts ..... 9.04 – 9.11, 9.19
Wall Mount Workstation 9.12
Mobile PC Cart ..... 9.12 – 9.13
PC Holder ..... 9.14 – 9.15
Cable Organizer 9.16
Wall / Ceiling Projector Mount 9.17
Monitor Stand ..... 9.18 – 9.19
Antifatigue Floor mat 9.19
PC Workstations 9.20, 9.21
Printer Tables 9.21
Cleaning Sets 9.22

10



TV Holders / Furnitures

TV Wall Holders ..... 10.02 – 10.06
Digital Signage ..... 10.06 – 10.07
TV Mobile Cart ..... 10.08 – 10.10
TV Ceiling Holders 10.11
Monitor /TV Board/Stand 10.11
Wall Cable Cover 10.12
Cable Box 10.12
Floor Cable Cover 10.12

%



SELLOFF - as long as we have stock

VALUE KVM Switches A.01
VALUE USB2.0 Type C Cables A.01
ROLINE Printer Switches A.01
ROLINE / VALUE Display Adapter ..... A.02 – A.03
ROLINE Device Server A.04
ROLINE Card Reader A.04
Audio-/ Video - Extender A.05
Audio-/ Video - Switch /Splitter A.06
DisplayPort Switch /Splitter A.07
VALUE Smartphone Holder A.08
Screwdriver Set A.08
ROLINE Mousepads A.09
Charging Station /Wireless Charging ..... A.09 – A.10
Car Charger A.10
ROLINE Internal PCI Cards A.10
PoE Tester A.11
VALUE Monitor Arms A.11

NEWSSHOP – New Products

ROLINE GREEN UTP Data Center Patch Cord Cat.6A /(Class EA), LSOH, Slim

Cat.6A Class EA | U/UTP

Category 6A twisted-pair patch cable with RJ-45 connectors on both sides. Particularly thin and flexible cable with individual pairs of wires for use in confined spaces, such as in data centres.

Halogenfree Flame retardant Low Smoke





- Durable thanks to moulded-on kink protection
- Suitable as patch cable in patch panels or as device connection cable and intended for use in the LAN
- Contact assignment: 1:1 according to EIA/TIA568, 8 cores
- Structure: 8 cores stranded wire

	Order-No.	– P.U.
ROLINE GREEN UTP Data Center Patch Cord Cat.6A (Class EA), LSOH, Slim, white, 0.5 m	21.44.0980	– 100
ROLINE GREEN UTP Data Center Patch Cord Cat.6A (Class EA), LSOH, Slim, white, 1 m	21.44.0981	– 100
ROLINE GREEN UTP Data Center Patch Cord Cat.6A (Class EA), LSOH, Slim, white, 2 m	21.44.0982	– 100
ROLINE GREEN UTP Data Center Patch Cord Cat.6A (Class EA), LSOH, Slim, white, 3 m	21.44.0983	– 50

roline green

Available February 2022

ROLINE GREEN U/FTP DataCenter Patch Cord Cat.6A /(Class EA), LSOH, Slim

Cat.6A Class EA | U/FTP

Category 6A twisted-pair patch cable with shielded RJ-45 connectors on both sides. Particularly thin and flexible cable with individual pairs of wires in aluminium-laminated foil for use in confined spaces, such as in data centres.

Halogenfree Flame retardant Low Smoke

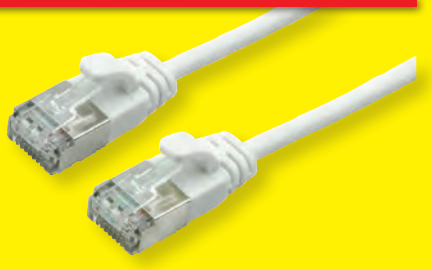

- Durable thanks to moulded-on kink protection
- Suitable as patch cable in patch panels or as device connection cable and intended for use in the LAN
- Contact assignment: 1:1 according to EIA/TIA568, 8 cores
- Structure: 8 cores stranded wire, pairs shielded with alu-laminated foil

	Order-No.	– P.U.
ROLINE GREEN U/FTP DataCenter Patch Cord Cat.6A (Class EA), LSOH, Slim, white, 0.5 m	21.44.1700	– 100
ROLINE GREEN U/FTP DataCenter Patch Cord Cat.6A (Class EA), LSOH, Slim, white, 1 m	21.44.1701	– 100
ROLINE GREEN U/FTP DataCenter Patch Cord Cat.6A (Class EA), LSOH, Slim, white, 2 m	21.44.1702	– 100
ROLINE GREEN U/FTP DataCenter Patch Cord Cat.6A (Class EA), LSOH, Slim, white, 3 m	21.44.1703	– 50

roline green

Available February 2022

ROLINE GREEN USB 2.0 Cable, A - B, M/M

High quality USB cable with one USB Type A and one USB Type B connector.



A-B M/M

- Improved shielding
- For the connection of devices with USB Type B connector; e.g. printer
- Meets standard USB 2.0 (transfer rate up to 480 Mbit/s)
- Colour: Black

	Order-No.	– P.U.
ROLINE GREEN USB 2.0 Cable, A - B, M/M, black, 0.8 m	11.44.8808	– 50
ROLINE GREEN USB 2.0 Cable, A - B, M/M, black, 1.8 m	11.44.8818	– 100

roline green

Available February 2022

ROLINE GREEN USB 3.2 Gen 1 Cable, A-C

- Improved data encoding for more efficient data transfer leading to higher through-put and improved I/O power efficiency
- Compatible with existing USB 3.0 / USB 3.2 Gen 1 software stacks and device protocols
- Works with both existing 5 Gbit/s USB 3.0 / USB 3.2 Gen 1 hubs and devices, as well as USB 2.0 products
- The USB type-C defines a new small reversible-plug connector for USB 3.0 / USB 3.2 Gen 1 devices
- USB 3.1 high-speed cable in high quality with improved shielding
- Data transfer rates up to 5 Gbit/s
- Only suitable for USB standard power supply to 5V / 900mA!
- Type: A-C
- Length: 0.5 m /1 m
- Colour: black

Note: According to the current specifications of USB.org we have adapted the technical data of our USB 3 products. The new designation for the already known USB specifications has been changed to USB 3.2 Gen 1 (formerly USB 3.0 / USB 3.1 Gen 1) and USB 3.2 Gen 2 (formerly USB 3.1 / USB 3.1 Gen 2).



	Order-No.	– P.U.
ROLINE GREEN USB 3.2 Gen 1 Cable, A-C, M/M, black, 0.5 m	11.44.9010	– 20
ROLINE GREEN USB 3.2 Gen 1 Cable, A-C, M/M, black, 1 m	11.44.9011	– 10

roline green

Available February 2022

NEWSSHOP – New Products

NEW

ROLINE GREEN USB 3.2 Gen 2 Cable, PD (Power Delivery) 20V5A, with Emark, C-C

Full-featured USB 3.1 / USB 3.2 Gen 2 cable with a data transmission rate of up to 10 Gbit/s and full Power Delivery support of up to 20V 5A!

- High quality USB 3.1 / USB 3.2 Gen 2 cable with improved shielding
- With the new reversible Type C connectors at both ends
- Gold-plated contacts for low wear at high plugging cycles
- Suitable for data transfer rates of up to 10 Gbit/s
- Supports USB Power Delivery to 20V / 5A
- Supports video transfer

Note: According to the current specifications of USB.org we have adapted the technical data of our USB 3 products. The new designation for the already known USB specifications has been changed to USB 3.2 Gen 1 (formerly USB 3.0 / USB 3.1 Gen 1) and USB 3.2 Gen 2 (formerly USB 3.1 / USB 3.1 Gen 2).



	Order-No.	– P.U.
ROLINE GREEN USB 3.2 Gen 2 Cable, PD (Power Delivery) 20V5A, with Emark, C-C, M/M, black, 0.5 m	11.44.9052	– 20
ROLINE GREEN USB 3.2 Gen 2 Cable, PD (Power Delivery) 20V5A, with Emark, C-C, M/M, black, 1 m	11.44.9053	– 10

roline green

Available February 2022

ROLINE GREEN HDMI High Speed Cable

HDMI (High-Definition Multimedia Interface) supports standard, enhanced, or high-definition video, plus multi-channel digital audio on a single cable.

- By delivering crystal-clear, all-digital audio and video via a single cable, HDMI dramatically simplifies cabling and helps provide consumers with the highest-quality home theater experience.
- Maximum resolution: 1920x1080 @60Hz
- HDMI High Speed increases single-link bandwidth to 340 MHz (10.2 Gbit/s)
- HDMI High Speed supports 10-bit, 12-bit and 16-bit (RGB or YCbCr) color depths, for stunning rendering of over one billion colors in unprecedented detail
- Cable with high quality shielding
- Colour: black



	Order-No.	– P.U.
ROLINE GREEN HDMI High Speed Cable, M/M, black, 1 m	11.44.5571	– 20
ROLINE GREEN HDMI High Speed Cable, M/M, black, 2 m	11.44.5572	– 20
ROLINE GREEN HDMI High Speed Cable, M/M, black, 3 m	11.44.5573	– 20
ROLINE GREEN HDMI High Speed Cable, M/M, black, 5 m	11.44.5575	– 10

roline green

Available February 2022

ROLINE GREEN HDMI High Speed Cable + Ethernet, TPE

4K 2160p 3D capable

ROLINE HDMI High Speed Cables with Ethernet - offering even more HDTV features, with a resolution of up to 3840x2160 @30Hz!

- HDMI Ethernet Channel
- Audio Return Channel
- 3D- Defines input/output protocols for major 3D video formats
- Quality cable with improved shielding
- Colour: black
- Cable with HDMI male connector on both sides
- Elastic and very flexible thanks to TPE outer sheath- best properties for cable ducts and similar applications where not much space is available
- Material: TPE (Thermoplastic Elastomer)



	Order-No.	– P.U.
ROLINE GREEN HDMI High Speed Cable + Ethernet, TPE, M/M, black, 1 m	11.44.5731	– 10
ROLINE GREEN HDMI High Speed Cable + Ethernet, TPE, M/M, black, 2 m	11.44.5732	– 10
ROLINE GREEN HDMI High Speed Cable + Ethernet, TPE, M/M, black, 3 m	11.44.5733	– 10
ROLINE GREEN HDMI High Speed Cable + Ethernet, TPE, M/M, black, 5 m	11.44.5735	– 10

roline green

Available February 2022

ROLINE GREEN HDMI High Speed Cable + Ethernet, A - C / A - D

2K 1080p FULL HD 3D capable

For the connection of e. g. mobile phones / smartphones or digital cameras / DSLRs.

- Colour: black
- HDMI Ethernet Channel
- Audio Return Channel
- 3D- Defines input/output protocols for major 3D video formats
- Video resolution: 1920 x 1080 Pixel
- Connectors: HDMI Type A M to HDMI Type C (Mini HDMI) M / Type D (Micro HDMI)
- Quality cable with improved shielding



	Order-No.	– P.U.
ROLINE GREEN HDMI High Speed Cable + Ethernet, A - C, M/M, 2 m	11.44.5580	– 10
ROLINE GREEN HDMI High Speed Cable + Ethernet, A - D, M/M, 2 m	11.44.5581	– 10

roline green

Available February 2022

ROLINE GREEN DisplayPort Cable, DP - Mini DP, TPE

2K 1600p

ROLINE DisplayPort Cable with one DP and one Mini DP connection for connecting an Ultrabook, Notebook/Laptop or PC to a monitor, TV or projector - for screen transmissions in excellent quality with resolutions of up to 2560x1600 @60Hz!

- DisplayPort is a universal connection standard for the transmission of picture and sound signals. Applications include mainly the connection of monitors and televisions to computers, BluRay players and similar devices.
- The connector requires less space and is therefore more suitable for portable display devices (ultrabooks, notebooks/laptops) or for 2 connectors on a graphics card (on a slot plate).

	Order-No.	– P.U.
ROLINE GREEN DisplayPort Cable, DP - Mini DP, M/M, black, 1 m	11.44.5634	– 20
ROLINE GREEN DisplayPort Cable, DP - Mini DP, M/M, black, 2 m	11.44.5635	– 20
ROLINE GREEN DisplayPort Cable, DP - Mini DP, M/M, black, 3 m	11.44.5636	– 20
ROLINE GREEN DisplayPort Cable, DP - Mini DP, M/M, black, 5 m	11.44.5637	– 10

- Mini DisplayPort connectors: Mini DisplayPort connector- DisplayPort connector; Mini DisplayPort is often used on monitors or graphics cards because it takes up less space than the conventional DisplayPort connector, despite having the same technology.
- Elastic and very flexible thanks to TPE outer sheath- best properties for cable ducts and similar applications where not much space is available
- Material: TPE (Thermoplastic Elastomer)
- Compliant DP v1.1 (max. 2560 x 1600 @60Hz)



Available February 2022

ROLINE GREEN DisplayPort Cable, DP-DP, TPE

4K 2160p

ROLINE DisplayPort Cable with DP connection on both sides for connecting an Ultrabook, Notebook/Laptop or PC to a monitor, TV or projector - for screen transmissions in excellent quality with resolutions of up to 3840x2160 / 4096x2560 @60Hz!

- DisplayPort is a universal connection standard for the transmission of picture and sound signals. Applications include mainly the connection of monitors and televisions to computers, BluRay players and similar devices.

	Order-No.	– P.U.
ROLINE GREEN DisplayPort Cable, DP-DP, TPE, M/M, black, 1 m	11.44.5761	– 20
ROLINE GREEN DisplayPort Cable, DP-DP, TPE, M/M, black, 2 m	11.44.5762	– 20
ROLINE GREEN DisplayPort Cable, DP-DP, TPE, M/M, black, 3 m	11.44.5763	– 20
ROLINE GREEN DisplayPort Cable, DP-DP, TPE, M/M, black, 5 m	11.44.5764	– 10

- The connector requires less space and is therefore more suitable for portable display devices (ultrabooks, notebooks/laptops) or for 2 connectors on a graphics card (on a slot plate).
- The practical plug design prevents the cable from slipping out of the DisplayPort socket.
- Elastic and very flexible thanks to TPE outer sheath- best properties for cable ducts and similar applications where not much space is available
- Material: TPE (Thermoplastic Elastomer)
- Compliant DP v1.2 (max. 4096 x 2560 @60Hz)



Available February 2022

ROLINE GREEN DisplayPort Cable, v1.4, DP-DP

8K 4320p

ROLINE DisplayPort Cable with DP connection on both sides for connecting an Ultrabook, Notebook/Laptop or PC to a monitor, TV or projector - for screen transmissions in excellent quality with resolutions of up to 7680x4320 @60Hz!

- DisplayPort is a universal connection standard for the transmission of picture and sound signals, widely known and appreciated in computer, industry and modern house wiring. Applications include mainly the connection of monitors or projectors to computers, notebooks/laptops, ultrabooks, NUCs and similar devices.

	Order-No.	– P.U.
ROLINE GREEN DisplayPort Cable, v1.4, DP-DP, M/M, black, 1 m	11.44.5810	– 20
ROLINE GREEN DisplayPort Cable, v1.4, DP-DP, M/M, black, 2 m	11.44.5811	– 10
ROLINE GREEN DisplayPort Cable, v1.4, DP-DP, M/M, black, 3 m	11.44.5812	– 10
ROLINE GREEN DisplayPort Cable, v1.4, DP-DP, M/M, black, 5 m	11.44.5813	– 10

- The connector requires less space than VGA or DVI and is therefore more suitable for portable devices for two connectors on a graphics card (on one slot plate).
- DisplayPort v1.4 supports Display Stream Compression 1.2a (DSC), Forward Error Correction and the HDR10 standard.
- Compliant DP v1.4 can reach a maximum resolution of 8K (7680x4320) @60Hz or 4K (3840x2160) @120Hz
- The practical plug design prevents the cable from slipping out of the DisplayPort socket and guarantees a stable audio and video transmission.



Available February 2022

ROLINE GREEN DisplayPort Cable, DP - HDTV

2K 1080p

DisplayPort to HDTV cable for transferring content from your graphics card (DisplayPort) to your TV (HDTV) - with a quality of up to 1920x1080 @60Hz, incl. audio transmission!

- HDTV is the standard for digital video transmission in the TV/multimedia sector for e. g.: Connection of a TV set with HDMI interface to a player with DisplayPort connection.

	Order-No.	– P.U.
ROLINE GREEN DisplayPort Cable, DP - HDTV, M/M, black, 1 m	11.44.5780	– 10
ROLINE GREEN DisplayPort Cable, DP - HDTV, M/M, black, 2 m	11.44.5781	– 10
ROLINE GREEN DisplayPort Cable, DP - HDTV, M/M, black, 3 m	11.44.5782	– 10

- Cable with one DisplayPort and one HDTV plug.
- Note: A DisplayPort HDTV cable can only be used in one direction: the DisplayPort connector can only be used on the data source side (e. g. graphics card).





Available February 2022

NEW

ROLINE 4K Adapter, Active, v1.2, HDMI - DP, M/F

4K 2160p

HDMI to DisplayPort cable adapter for connecting a graphics card with HDMI to a monitor with DP connection - with a resolution of up to 3840x2160 @60Hz!

- If you want to connect a graphic card with HDMI Female to a monitor by using a DisplayPort cable, you need this HDMI to DisplayPort adapter
- Connectors: HDMI Male, DisplayPort Female
- DisplayPort version 1.2 allows increased resolutions, higher refresh rates, and greater color depth
- Max. resolution: 3840 x 2160 (@60Hz)
- Active
- Remark: The HDMI- DisplayPort adapter is only working in one direction: the HDMI Port plug has to be connected to the source device (e.g. graphic card)

What are the benefits of using Active adapters and converters? Active products can have a huge advantage when working with long cable runs and video conversion applications. In terms of video converters, active units generally have hardware inside to improve your image.





roline® Designed for Professionals

Available February 2022

	Order-No.	– P.U.
ROLINE 4K Adapter, active, v1.2, HDMI - DP, M/F	12.03.3147	– 10

ROLINE Cable, UHDTV - DisplayPort

4K 2160p

UHDTV to DisplayPort cable for transferring content from your graphics card (UHDTV) to your monitor (DisplayPort) - with a quality of up to 3840x2160 @60Hz, incl. audio transmission!

- HDTV is the standard for digital video transmission in the TV/multimedia sector for e. g.: Connection of a device with HDMI interface to a monitor with DisplayPort connection.
- Cable with one DisplayPort and one HDTV plug.
- Note: A UHDTV cable can only be used in one direction: the HDMI connector can only be used on the data source side (e. g. graphics card).





roline® Designed for Professionals

Available February 2022

	Order-No.	– P.U.
ROLINE Cable, UHDTV - DisplayPort, M/M, black, 1 m	11.04.5991	– 10
ROLINE Cable, UHDTV - DisplayPort, M/M, black, 2 m	11.04.5992	– 10
ROLINE Cable, UHDTV - DisplayPort, M/M, black, 3 m	11.04.5993	– 10

VALUE USB Wall Charger, 1-Port, 12W

1-port USB charger, 1x Type A with maximum 12W for powering a smartphone/tablet, external SSD/HDD or other devices

- For charging or as a power supply from a device via its USB input
- Perfect supplement for your Wireless Charger, as the scope of delivery often does not include plug-in power supplies
- Suitable, for example, for smartphone/tablet, external SSD/HDD enclosures and other devices
- Charger with one USB Type A socket
- Matt black PVC housing and Euro flat plug

Technical data

- Plug-in power supply with one USB output, type A socket
- Input voltage: 100- 240V AC, 50- 60Hz
- Output voltage: 5VDC
- Output power: 12W (2.4A)
- Dimensions: 36 x 24 x 84 mm



Available February 2022

Value®

	Order-No.	– P.U.
VALUE USB Wall Charger, 1-Port, 12W	19.99.1093	– 10

VALUE USB Wall Charger, QC3.0, 1-Port, 18W

1-port USB charger, 1x Quick Charge 3.0 Type A with maximum 18W for powering a smartphone/tablet, external SSD/HDD or other devices

- For charging or as a power supply from a device via its USB input
- Perfect supplement for your Wireless Charger, as the scope of delivery often does not include plug-in power supplies.
- Suitable, for example, for smartphone/tablet, external SSD/HDD enclosures and other devices
- Charger with one USB Type A Quick Charge 3.0 socket
- Matt black PVC housing and Euro flat plug

Technical data

- Power supply with one USB output, type A Quick Charge 3.0 female connector
- Input voltage: 100- 240V AC, 50- 60Hz
- Output voltage: 3,6-6,5VDC, 6,5-9VDC, 9V-12VDC
- Output power: 18W (3A, 2A, 1.5A)
- Dimensions: 36 x 24 x 84 mm



Available February 2022

Value®

	Order-No.	– P.U.
VALUE USB Wall Charger, QC3.0, 1-Port, 18W	19.99.1092	– 10

NEWSSHOP – New Products

ROLINE PC Standing Workstation, Height adjustable, tiltable

Work healthier! A change from sit to stand is good for your spine. With our height adjustable ROLINE PC-Stand-Workplace you can do your work standing.

- This workstation is easy to operate and a great addition for use in offices, schools, homes, conference rooms and more
- Pneumatic Height Adjustment: easy operation to adjust the height for dynamic work
- Foot Pedal: effortlessly adjusts your workstation to desired height
- Stable metal/plastic frame
- Offers a tiltable desktop in 4 tilt angles (0° /10° / 20° / 30°) to create a comfortable working or presentation style, and its paddle lever ensures an effortless tilt adjustment.
- The combination of the single leg and four casters enables the workstation to be portable and mobile to go anywhere you want
- Max. load : up to 8 kg
- Mobile workstation with height adjustable from min. 82 / max. 119 cm
- Mobile via 4 wheels, 2 of which can be locked
- Colour: white
- Dimensions (W x D x H): min. 82 / max. 119 cm x 60 x 53,1 cm
- Table top thickness 16mm (Melamine)

The furniture is height adjustable just as you need it and helps to create an ergonomic, healthy workplace by allowing users to sit or stand throughout the day.



roline®
Designed for Professionals

Available February 2022

	Order-No.	– P.U.
ROLINE PC Standing Workstation, height adjustable, tiltable, white	17.02.1548	– 1

ROLINE Gas Spring Side Table / Workstation, Height adjustable

Work healthier! A change from sit to stand is good for your spine. With our height adjustable ROLINE Gas Spring Side Table / Workstation you can do your work standing.

- Offers maximum comfort and adaptability to multiple requirements / applications
- Frees users from a fixed working area
- Smooth and quiet height adjustment
- A gas spring with a self-locking mechanism provides smooth and effortless height adjustment
- A sturdy column along with heavy-duty frame enhances the stability while writing or typing
- Built-in cup slot prevents the cup from falling or slipping while moving
- Squeeze Lever: makes the adjustment easy, creates smooth and quick transitions
- Heavy-Duty Casters with Locking Mechanism
- Stable metal/plastic frame
- Eco-Friendly Particle Board: features heavy-duty and moisture resistance
- High-Strength Steel Frame: better durability to weight and wear
- Drink Holder: for cups or cans
- Top shelf (W x D: 71 x 40 cm)
- Mobile via 4 wheels, 2 of which can be locked
- Max. Load: 7 kg
- Colour: white
- Dimensions (H x W x D): min. 71 / max. 106 x 71 x 40 cm
- Table top thickness 16mm (Melamine)

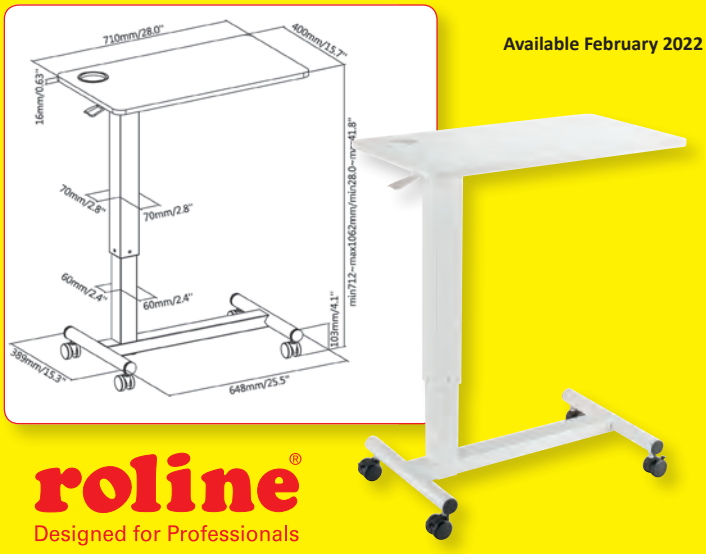

roline®
Designed for Professionals

Available February 2022

	Order-No.	– P.U.
ROLINE Gas Spring Side Table / Workstation, height adjustable, white	17.02.1549	– 1

ROLINE Grid Cable Organizer, Under Desk Mount (2 pieces)

- Desktop grid cable tray organizer
- Simple design: hides wire and power cords for a clean workspace
- Manage all cables: enough room for power stripes, network, and computer cabling
- Max. Load: 5 kg
- Dimensions: 2 pieces á 600 x 132 x 99 mm
- Easy installation
- Contents:2x cable manager à 600 x 132 x 99 mm

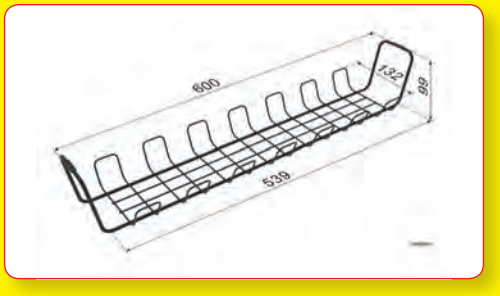



roline®
Designed for Professionals

Available February 2022

	Order-No.	– P.U.
ROLINE Grid Cable Organizer, Under Desk Mount (2 pieces), black	17.03.1305	– 4



roline®
Designed for Professionals

Network Components / Cables

1

Fast- / Gigabit Ethernet Converter / Hub 1.02
Fast- / Gigabit Ethernet Switches . . . . . 1.03 – 1.07
Media Converters . . . . . 1.04 – 1.05, 1.11 – 1.13
PoE Injectors / PoE Switches . . . . . 1.05 – 1.09
Industrial Networking . . . . . 1.10 – 1.13
TP Cables Overview . . . . . 1.14 – 1.15
Installation Cables . . . . . 1.16 – 1.19
Patch Cords . . . . . 1.20 – 1.33
Patch Panels . . . . . 1.34 – 1.36
Patch Cables Management . . . . . 1.41, 1.47 – 1.51
Mount Boxes . . . . . 1.36 – 1.37
Modular Plugs, Couplers, Junction Boxes,
Keystones . . . . . 1.38 – 1.40, 1.42 – 1.46
Fibre Optic Jumper Cables . . . . . 1.52 – 1.57
FO Cleaning Accessories 1.58
FO Adapter 1.59
MPO Cabling System 1.60
19” LCD KVM Consoles 1.61
19’’ Wall Cabinets 1.62

VALUE / ROLINE USB to Fast / Gigabit Ethernet Converter

These converters are a cost effective solution to convert a USB port into a Fast- or Gigabit Ethernet port

- Easy installation- just plug the converter into the USB port, connect the LAN cable- done!
- Bus Powered- no external power supply required
- Supports 10/100/1000 Mbit/s auto-sensing capability in Gigabit Ethernet
- Supports both full-duplex and half-duplex operation in Gigabit Ethernet

Value® roline® Designed for Professionals

Ethernet continues to be the most used network interface as the standard evolves to meet the massive data bandwidth requirements of different markets.
Due to the upward trend in data traffic, new Ethernet rates have been developed to alleviate the traffic bottlenecks created by the data explosion, therefore the 2.5 Gigabit Ethernet standard was designed to bridge the copper-twisted-pair gap between Gigabit Ethernet and 10 Gigabit Ethernet.

12.99.1105



12.02.1106



12.99.1107



12.99.1116



12.02.1107



12.02.1108



12.02.1109



12.99.1115





12.02.1110



12.02.1111



2.5 Gbit/s - 12.02.1103

Brand	Description	USB Compliant	Network Connection	USB Type	Color	Supported OS	Hub Function	Item Number	PU
VALUE	USB to Fast Ethernet Converter	USB 2.0	Fast Ethernet	A	black	Win XP / 7 / 8 / 10, Mac OS X		12.99.1107	– 10
VALUE	USB to Gigabit Ethernet Converter	USB 3.2 Gen 1	Gigabit Ethernet	A	black	Win XP / 7 / 8 / 10, Mac OS X		12.99.1105	– 10
VALUE	USB to Gigabit Ethernet Converter	USB 3.2 Gen 2	Gigabit Ethernet	C	black	Win XP / 7 / 8 / 10, Mac OS X		12.99.1115	– 10
VALUE	USB to Gigabit Ethernet Converter + 3x Hub	USB 3.2 Gen 1	Gigabit Ethernet	A	black	Win XP / 7 / 8 / 10, Mac OS X	3x USB A	12.99.1116	– 10
ROLINE	USB to Gigabit Ethernet Converter	USB 3.2 Gen 1	Gigabit Ethernet	A	black	Win XP / 7 / 8 / 10, Mac OS X		12.02.1106	– 10
ROLINE	USB to Gigabit Ethernet Converter + 3x Hub	USB 3.2 Gen 1	Gigabit Ethernet	A	black	Win XP / 7 / 8 / 10, Mac OS X	3x USB A	12.02.1107	– 5
ROLINE	USB to Gigabit Ethernet Converter + 3x Hub	USB 3.2 Gen 1	Gigabit Ethernet	C	black	Win XP / 7 / 8 / 10, Mac OS X	3x USB A	12.02.1108	– 10
ROLINE	USB to Gigabit Ethernet Converter	USB 3.2 Gen 2	Gigabit Ethernet	C	white	Win XP / 7 / 8 / 10, Mac OS X		12.02.1109	– 10
ROLINE	USB to Gigabit Ethernet Converter	USB 3.2 Gen 2	Gigabit Ethernet	C	silver	Win XP / 7 / 8 / 10, Mac OS X		12.02.1110	– 10
ROLINE	GOLD USB to Gigabit Ethernet Converter	USB 3.2 Gen 2	Gigabit Ethernet	C	golden	Win XP / 7 / 8 / 10, Mac OS X		12.02.1111	– 10
ROLINE	USB to 2.5 Gigabit Ethernet Adapter	USB 3.2 Gen 2	2.5 Gigabit Ethernet	C	black	Win XP / 7 / 8 / 10, Mac OS X		12.02.1103	– 5

ROLINE Fast Ethernet Switch, Pocket

Very flat pocket size switch in stable metal casing.

- Ports: 5x/8x 10/100BaseTX
- Metal casing
- Auto-MDI/MDIX
- Auto-Negotiation
- Store and Forward
- Non-Blocking
- Supports full-duplex and Flow Control
- MAC addresses: 2K
- Dimensions: 79 × 62 × 20 mm / 94 x 62 x 20 mm
- Power supply: 5 VDC 1.2A or over USB connection from the PC
- Contents: Switch, power supply, USB power cable, manual





roline®
Designed for Professionals

	Order-No. – P.U.
ROLINE Fast Ethernet Switch, Pocket, 5 Ports	21.14.3133 – 4
ROLINE Fast Ethernet Switch, Pocket, 8 Ports	21.14.3134 – 4

ROLINE Gigabit Ethernet Switch, Pocket

This product is compact in size, making it ideal for SOHO users with limited space to strengthen its network connection.

- 4x / 8x 10/100/1000BaseTX ports
- Very compact, metal pocket size casing
- Auto-MDI/MDIX
- Auto-negotiation
- Store and forward switching
- Non-blocking
- MAC addresses: 1K / 8K
- Power supply: 5 VDC 1.2A or over USB connection from the PC
- Contents: Switch, power supply, USB power cable, manual





roline®
Designed for Professionals

	Order-No. – P.U.
ROLINE Gigabit Ethernet Switch, Pocket, 4 Ports	21.14.3514 – 4
ROLINE Gigabit Ethernet Switch, Pocket, 8 Ports	21.14.3530 – 4

ROLINE Gigabit Ethernet Switch, unmanaged

- Provides 8x 10/100/1000Mbit/s Gigabit Ethernet ports
- All 10/100/1000M ports support auto-negotiation and auto-MDI/MDI-X detection
- Supports full/half-duplex transfer mode for 10/100Mbit/s
- Supports full-duplex transfer mode for 1000Mbit/s
- Store-and-Forward switching method
- Wire-speed packet filtering and forwarding rate
- Supports IEEE 802.3x flow control
- Supports Jumbo Frame up to 9.6K bytes
- MAC Address Table: 8K
- Buffer Memory: 256K bytes
- LED Indication
- Environment Operating Temperature: 0°C ~ 40°C (main device)
- Dimensions (WxDxH): 155 x 86 x 26 mm
- Contents: Switch, power supply (5V DC, 1A), manual



roline®
Designed for Professionals

	Order-No. – P.U.
ROLINE Gigabit Ethernet Switch, 8x RJ-45, unmanaged	21.14.3521 – 10

ROLINE Gigabit Ethernet Switch, 5x (4xGbE + 1xGbic(SFP))

- Provides 4x TP 10/100/1000Mbit/s Gigabit Ethernet ports and 1x Gbic (SFP)) 100/1000Mbit/s Fibre: MultiMode 50/125µm, 60/125µm, SingleMode 9/125µm
- All 10/100/1000M ports support auto-negotiation and auto-MDI/MDI-X detection
- Supports full/half-duplex transfer mode for 10/100Mbit/s
- Supports full-duplex transfer mode for 1000Mbit/s
- Store-and-Forward switching method
- Wire-speed packet filtering and forwarding rate
- Supports IEEE 802.3x flow control
- Supports Jumbo Frame up to 8K Bytes
- MAC Address Table: 2K
- Buffer Memory: 128 kBytes
- LED Indication
- Environment Operating Temperature: 0°C ~ 40°C (main device)
- Dimensions (WxDxH): 148 x 107 x 29 mm
- Contents: Switch, power supply (5V DC, 1A), manual



roline®
Designed for Professionals

	Order-No. – P.U.
ROLINE Gigabit Ethernet Switch, 5x (4xGbE + 1xGbic(SFP))	21.14.3522 – 1

VALUE Fast Ethernet Converter, RJ-45 to SC

Converter from Fast Ethernet TP port to multimode fiber
- Supports full wire speed conversion for 10/100Mbit/s speed and media types
- Transparent conversion to 802.1Q VLAN tagged packets
- TP port:
- IEEE 802.3 10Base-T, IEEE 802.3u 100Base-TX
- Shielded RJ-45 jacks with auto MDI/MDI-X detection
- Auto-negotiation for speed and duplex auto detection
- Speed for 10/100 Mbit/s, Full/half-duplex support
- FX port: Duplex SC
- IEEE 802.3u 100Base-FX compliant
- Forced 100Mbit/s, Full-duplex
- For multimode fibre cable: 62.5/125µm and 50/125µm
- Low power consumption: 2.5W
- Power over included power supply (5VDC, 1A)
- Remark: The converters do not offer a repeater function!
- Contents: Converter, power supply (5V DC, 1000mA), manual



	Order-No.	P.U.
VALUE Fast Ethernet Converter, RJ-45 to SC	21.99.1069	5

VALUE Fast Ethernet Converter, incl. mini GBIC, RJ45 to LC

For converting a Fast Ethernet TP port to multimode fiber
- These converters convert a Fast Ethernet TP port to fiber optic
- Connections: RJ-45 on the TP side / Mini-GBIC slot on the fiber side
- Mini-GBIC module LC: The maximum cable length on the fiber side is 220m when using a 62.5/125µm fiber and 500m when using a 50/125µm fiber.
- Dimensions (WxDxH): 70x108x25mm
- Colour: black
- Power is supplied via an external power supply unit
- Note: The converters do not have a repeater function
- Scope of delivery: Converter, manual, power supply (5V DC, 1A), Mini-GBIC module SX/LC
- Contents: Converter, Manual, PSU



	Order-No.	P.U.
VALUE Fast Ethernet Converter, incl. mini GBIC, RJ45 to LC	21.99.1070	5

ROLINE Gigabit Switch, Web-Smart

This Gigabit switch allows the transfer of data over Gigabit Ethernet through copper or fibre optical connections.
- Connections: 5x shielded RJ-45 ports and 1x mini GBIC modular slot (fibre optical)
- Mini GBIC port enables the installation of one SX/LC module (21.14.3500/1/2)
- Supports auto-negotiation, full-duplex mode and auto-MDI/MDIX detection
- Supports store and forward switching
- Web Smart management
- Dimensions (WxDxH): 144 x 105 x 26 mm
- Power supply over included external power adapter
- Contents: Switch, power supply (7,5V DC, 1A), CD (manual)





roline®
Designed for Professionals

	Order-No.	P.U.
ROLINE Gigabit Switch, 5x RJ-45 + 1 SFP-Slot, Web-Smart	21.14.3523	1
ROLINE Mini-GBIC Modul SX/LC, Multi Mode	21.14.3500	10
ROLINE Mini-GBIC Module LX/LC, Single Mode, 10 km	21.14.3501	10
ROLINE Mini-GBIC Module LX/LC, Single Mode, 20 km	21.14.3502	10

ROLINE 19“ Gigabit Ethernet Switch

- 24x 10/100/1000Mbit/s Gigabit Ethernet ports
- 2x 10/100/1000Mbit/s SFP Ports
- Compliant with the IEEE802.3 10Base-T Ethernet, IEEE802.3u 100Base-TX, IEEE802.3ab 1000Base-T specifications
- Supports auto-negotiation and auto-MDI/MDI-X detection
- Supports full/half-duplex transfer mode
- Store-and-Forward switching method
- IEEE 802.3x flow control for full-duplex mode
- Backpressure flow control for half-duplex mode
- MAC addresses: 8K
- 19“ rack mountable
- Contents: Switch, power cord, 19“ rack mount kit, driver CD, manual





roline®
Designed for Professionals

	Order-No.	P.U.
ROLINE Gigabit Ethernet Switch, 24x 10/100/1000 Ports + 2x SFP Ports	21.14.3519	1

ROLINE RC-100FX/ST Fast Ethernet Converter, RJ-45 to ST, Loop-back

- These converters are the ideal connectivity solution for networks using a combination of STP and fiber optic types
- Provides media conversion from STP to multimode ST media type
- RC-100FX/ST: The maximum cable length for fiber is 2000 m by using a 50/125µm fiber
- Loop-back-test
- Configration: TP Mode, TP Duplex, TP Speed
- 6 LEDs: TP Speed, Link/Activity, Power, Duplex, Fiber Signal
- Power supplied by included external power supply
- Colour: grey
- Dimensions (WxLxH): 72.5 x 108 x 23 mm
- Contents: Converter, power supply (7.5V DC, 500mA), manual



roline®
Designed for Professionals

	Order-No. – P.U.
ROLINE RC-100FX/ST Fast Ethernet Converter, RJ-45 to ST, Loop-back	21.13.1070 – 5
ROLINE RC-100FX/SC Fast Ethernet Converter, RJ-45 to SC, Loop-back	21.13.1071 – 5

ROLINE Gigabit Converter

Convert a fiber optic (FX) signal into a Twisted Pair (TP) signal. And we offer you the according modules.

- Connections: 1x RJ-45 on the TP side / 1x (21.13.1069) resp. 2x (21.13.1067) Mini GBIC modular slot on the fibre optical side
- Compliant with 1000BaseT and 1000BaseSX/LX Gigabit Ethernet standards
- TP port supports full-duplex, auto-MDI/MDIX, auto-negotiation
- Each SFP slot supports both singlemode and multimode, or mixed
- Link Loss Forwarding (LLF) / Link Fault Pass Through (LFP)
- Power supply over included external power supply
- Contents: Converter, power supply, CD

21.13.1069:
- Dimensions (WxDxH): 73 x 108 x 23 mm

21.13.1067:
- Dimensions (WxDxH): 74 x 102 x 22 mm

21.14.3500:
- Mini GBIC Modul SX/LC: The maximum cable length for the fibre optic cable is 220 m (62.5/125 µm fibre) and 500 m (50/125 µm fibre)



roline®
Designed for Professionals

	Order-No. – P.U.
ROLINE Gigabit Converter, incl. mini GBIC, RJ45 to LC	21.13.1069 – 5
ROLINE Gigabit Converter, RJ-45 to Mini GBIC	21.13.1067 – 2
ROLINE Mini-GBIC Modul SX/LC, Multi Mode	21.14.3500 – 10
ROLINE Mini-GBIC Module LX/LC, Single Mode, 10 km	21.14.3501 – 10
ROLINE Mini-GBIC Module LX/LC, Single Mode, 20 km	21.14.3502 – 10

ROLINE 10/100/1000Base-T to Dual-speed Fiber Media Converter

Ethernet-Fiber converter which enables connections of copper-based Ethernet equipment over a fiber optic link

- Tri-speed 10/100/1000Mbit/s copper to dual-speed 1G/100Mbps fiber conversion
- Support full wire speed conversion for Gigabit copper to Gigabit fiber
- Comply with IEEE 802.3, 802.3u, 802.3ab, 802.3z standard
- Auto-negotiation
- Auto-MDI/MDI-X detection
- Supports jumbo frame length of 9.2K bytes
- Supports 802.3x flow control
- LED Indication Unit: Power status, per port: Fiber Speed/Link/Activity, Copper Speed/Link/Activity
- Metal casing
- Contents: Converter, power supply, manual



roline®
Designed for Professionals

	Order-No. – P.U.
ROLINE 10/100/1000Base-T to Dual-speed Fiber Media Converter	21.13.1174 – 6

VALUE PoE Fast Ethernet Switch, 4 Ports + 2 Uplink Ports

The VALUE PoE+ Fast Ethernet Switch with 4 ports is ideal for small and medium networks, CCTV transmission, access connectivity.

- 6x 10/100 Mbit/s Fast Ethernet ports (2 Uplink ports)
- 4 ports are 802.3af / at-compliant PoE ports
- Each of the 4 ports provides up to 30W Output Power
- All ports support Auto-MDI / MDI-X, auto-negotiation and flow control (802.3x for full duplex and backpressure for half-duplex)
- Status LEDs: Power, PoE, link / activity
- Compact metal housing
- Internal power supply
- Dimensions (WxDxH): 190 × 130 × 32 mm



Value®

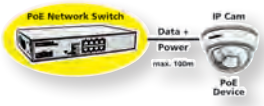



	Order-No. – P.U.
VALUE PoE Fast Ethernet Switch, 4 Ports + 2 Uplink Ports	21.99.1192 – 4

VALUE PoE Fast Ethernet Switch, 4 Ports + 1 Uplink Port (non PoE)

NEW

The VALUE PoE+ Fast Ethernet Switch with 4 ports is ideal for small and medium networks, CCTV transmission, access connectivity.

- 5x 10/100 Mbit/s Fast Ethernet ports (1 Uplink port)
- 4 ports are 802.3af / at-compliant PoE ports
- Each of the 4 ports provides up to 30W Output Power
- All ports support Auto-MDI / MDI-X, auto-negotiation and flow control (802.3x for full duplex and backpressure for half-duplex)
- Status LEDs: Power, PoE, link / activity
- Compact metal housing
- Internal power supply
- Dimensions (WxDxH): 125 × 75 × 27 mm



	Order-No. – P.U.
VALUE PoE Fast Ethernet Switch, 4 Ports + 1 Uplink Port (non PoE)	21.99.1190 – 4

VALUE PoE Fast Ethernet Switch, 8 Ports + 2 Uplink Ports (non PoE)

NEW

The VALUE PoE+ Fast Ethernet Switch with 8 ports is ideal for small and medium networks, CCTV transmission, access connectivity.

- 8x 10/100 Mbit/s Fast Ethernet ports (+2 Uplink ports)
- 8 ports are 802.3af / at-compliant PoE ports
- Each of the 8 ports provides up to 30W Output Power
- All ports support Auto-MDI / MDI-X, auto-negotiation and flow control (802.3x for full duplex and backpressure for half-duplex)
- Status LEDs: Power, PoE, link / activity
- Compact metal housing
- Internal power supply
- Dimensions (WxDxH): 210 × 152 × 40 mm

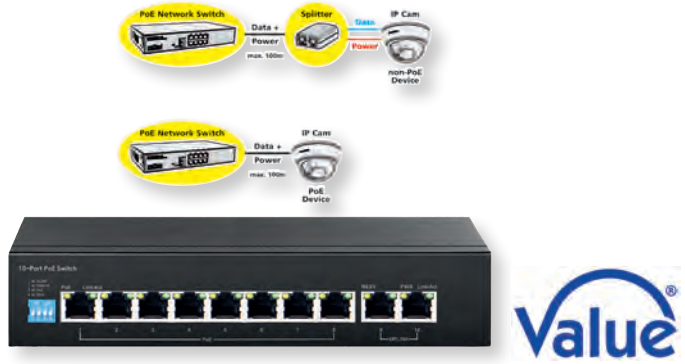

	Order-No. – P.U.
VALUE PoE Fast Ethernet Switch, 8 Ports + 2 Uplink Ports (non PoE)	21.99.1191 – 3

VALUE PoE Switch, Gigabit Ethernet, 8+2 Uplink Ports (1x GbE + 1x SFP)

Gigabit Ethernet PoE switch with 8+2 ports for small or medium-sized network environments.

This Gigabit Ethernet PoE switch is designed for small or medium network environments to strengthen its network connection. It converts standard 100~240V/AC power into low-voltage DC that runs over an existing LAN cable to power up Power over Ethernet (PoE) compliant network accessories like e.g. workgroup switches, network cameras, access points, IP-phones.

- 8x 10/100/1000 Mbit/s Auto-Negotiation PoE ports with 1 Gigabit Uplink or 1x SFP Port
- Compliant with IEEE802.3af/at standard (IEEE802.3, 802.3u, 802.3af, 802.3x)
- IEEE802.3x flow control for Full-Duplex Mode and back-pressure for Half-Duplex Mode
- Bandwidth 18Gbit/s
- Detects your PoE devices according to PoE standard
- Supports automatic detect functionality to protect the system when the system power is overloaded or there is non-POE device
- LED indicators for monitoring power, link,activity and speed
- Switching method: Store-and-forward
- Metal casing
- Contents: Switch, power cord, manual



	Order-No. – P.U.
VALUE PoE Switch, Gigabit Ethernet, 8+2 Uplink Ports (1x GbE + 1x SFP)	21.99.1193 – 4

VALUE PoE Switch, Gigabit Ethernet, 8+2 Ports

Gigabit Ethernet PoE switch with 8+2 ports for small or medium-sized network environments.

This Gigabit Ethernet PoE switch is designed for small or medium network environments to strengthen its network connection. It converts standard 100~240V/AC power into low-voltage DC that runs over an existing LAN cable to power up Power over Ethernet (PoE) compliant network accessories like e.g. workgroup switches, network cameras, access points, IP-phones.

- 8x 10/100/1000 Mbit/s Auto-Negotiation PoE ports with 2 Gigabit Uplink Ports
- Compliant with IEEE802.3af/at standard (IEEE802.3, 802.3u, 802.3af, 802.3x)
- IEEE802.3x flow control for Full-Duplex Mode and back-pressure for Half-Duplex Mode
- Bandwidth 18Gbit/s
- Detects your PoE devices according to PoE standard
- Supports automatic detect functionality to protect the system when the system power is overloaded or there is non-POE device
- LED indicators for monitoring power, link,activity and speed
- Switching method: Store-and-forward
- Metal casing
- Contents: Switch, power cord, manual



	Order-No. – P.U.
VALUE PoE Switch, Gigabit Ethernet, 8+2 Ports	21.99.1195 – 4

ROLINE PoE Fast Ethernet Switches, 5 Ports (1x PoE) / 8 Ports

The ROLINE PoE Fast Ethernet Switch is designed for small network environment to strengthen its network connection. It's also specially designed for video surveillance in buses, trains, subway cars and emergency vehicles. This product is compact in size, making it ideal for every user with limited space.

- 5x 10/100BaseTx ports, including 1xPoE (Power over Ethernet) port (21.13.1190)
- 8x 10/100BaseTx Fast Ethernet ports (21.13.11901
- PoE port 802.3af compliant
- PoE port provides 48 VDC with up to 15.4 W power
- Auto-MDI/MDIX
- Auto-negotiation
- Full wire speed forwarding
- MAC addresses: 1K
- Casing: metal
- External power supply (40 W)





roline®
Designed for Professionals

	Order-No. – P.U.
ROLINE PoE Fast Ethernet Switch, 5 Ports (1x PoE)	21.13.1190 – 2
ROLINE PoE Fast Ethernet Switch, 8 Ports	21.13.1191 – 2

ROLINE Gigabit Ethernet Switch, 6x (5xGbE + 1x Gbic(SFP), 4x PoE+)

NEW

- Provides 5x TP 10/100/1000Mbps Gigabit Ethernet ports and 1x Gbic (SFP))
  100/1000Mbit/s Fibre: MultiMode 50/125µm, 60/125µm, SingleMode 9/125µm
- All 10/100/1000M ports support auto-negotiation and auto-MDI/MDI-X detection
- Supports full/half-duplex transfer mode for 10/100Mbps
- Supports full-duplex transfer mode for 1000Mbps
- Store-and-Forward switching method
- Wire-speed packet filtering and forwarding rate
- Supports IEEE 802.3x flow control
- 4x PoE Ports (IEEE 802.3at)
- Supports Jumbo Frame up to 9K Bytes
- MAC Address Table: 2K
- Buffer Memory: 128 kBytes
- LED Indication
- Environment Operating Temperature: 0°C ~ 40°C (main device)
- Dimensions (WxDxH): 147 x 106 x 28 mm

- Contents: Switch, power supply (54V DC, 1.6A), manual

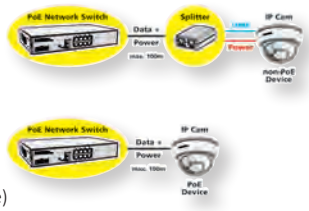



roline®
Designed for Professionals

	Order-No. – P.U.
ROLINE Gigabit Ethernet Switch, 6x (5xGbE + 1x Gbic(SFP), 4x PoE+)	21.14.3524 – 1

ROLINE Industrial Gigabit PoE++ Mid-Span Injector, 90W

The ROLINE Gigabit PoE Injector is a so-called PSE (Power Source Equipment), a unit to supply power for e.g. surveillance cameras, and LAN devices such as access points, bridges and routers over Ethernet cable.

A PSE supplies the current together with the data in the network cable. It doesn't need no longer an additional own power supply of the device.

- Supply of data and power into the network cables
- Connectors: 1x RJ-45 port (Data In, Data input), 1x power socket (Power In, input power supply), 1x RJ-45 port (Data & Power Out, output data and power)
- Compatible with 802.3af and 802.3at
- Power via PoE++: up to 90W
- LED indicators for Power, Link / Act. and PoE
- Output voltage: 802.3af standard (45V-57V DC)
- Contents: Injector, manual





roline®
Designed for Professionals

	Order-No. – P.U.
ROLINE Industrial Gigabit PoE++ Mid-Span Injector, 90W	21.13.1202 – 1

VALUE Gigabit PoE Injector

The VALUE Gigabit PoE Injector is a so-called PSE, a unit to supply power for e.g. surveillance cameras, and LAN devices such as access points, bridges and routers over Ethernet cable.
A PSE supplies the current together with the data in the network cable. It doesn't need no longer an additional own power supply of the device.

- Supply of data and power into the network cables
- Connectors: 1x RJ-45 port (Data In, Data input), 1x IEC power socket (Power In, input power supply), 1x RJ-45 port (Data & Power Out, output data and power)
- Compatible with 802.3af and 802.3at
- Power via PoE: up to 30W
- LED indicators for Power, Link / Act. and PoE
- Output voltage: 802.3af standard (46V-55V DC)
- Contents: Injector, manual





	Order-No. – P.U.
VALUE Gigabit PoE Injector	21.99.1498 – 10

ROLINE Gigabit PoE Injector

The ROLINE Gigabit PoE Injector is a so-called PSE, a unit to supply power for e.g. surveillance cameras, and LAN devices such as access points, bridges and routers over Ethernet cable.
A PSE supplies the current together with the data in the network cable. It doesn't need no longer an additional own power supply of the device.

- Supply of data and power into the network cables
- Connectors: 1x RJ-45 port (Data In, Data input), 1x IEC power socket (Power In, input power supply), 1x RJ-45 port (Data & Power Out, output data and power)
- Compatible with 802.3af and 802.3at
- Power via PoE: up to 30W
- LED indicators for Power, Link / Act. and PoE
- Output voltage: 802.3af standard (46V-52V DC)
- Contents: Injector, manual

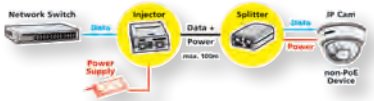



roline®
Designed for Professionals

	Order-No. – P.U.
ROLINE Gigabit PoE Injector	21.13.1199 – 6

ROLINE PoE Gigabit Injector

With this ROLINE Gigabit Ethernet PoE injector you can supply with power simultaneously 4 PoE-capable workgroup switches, network cameras, access points, IP phones, etc. via TP connecting cable

- Inputs: 4x 10/100/1000 ports for data
- Outputs: 4x 10/100/1000 ports for data and power
- Supports PoE IEEE 802.3af / at: Up to 30 W per port can be fed into the TP cable
- Power supply via terminal block or external DC power supply (48V to) 56V DC Port
- Weight: 190 g
- Dimensions (L x W x H): 94 × 62 × 20 mm
- Metal housing



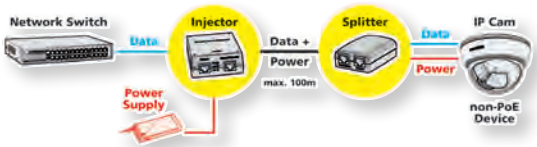



roline®
Designed for Professionals

	Order-No. – P.U.
ROLINE PoE Gigabit Injector, 4 Ports	21.13.1198 – 2

ROLINE Gigabit PoE+ Extender

- 2 port Gigabit PoE extender designed for extending connection distance for another 100m on both ends via Cat-5e cable or better
- For covering longer distances by cascading multiple PoE extender together on a network
- No need any additional power supply
- LAN cable to power IEEE 802.3at compliant network accessories
- Features PoE awareness to verify whether the network device receive power is IEEE 802.3at compliant, or only the data will be sent through LAN cable
- No special networking cable required
- Input: 1x 10/100/1000 ports for data and power
- Output: 1x 10/100/1000 ports for data and power
- By adding PoE devices, it's possible to use an existing standard Cat.5e/6 Ethernet cable without a new electrical outlet for both power and data
- Supports PoE IEEE 802.3af/at
- Own power supply via PoE-consumption about 2W
- Metal enclosure- Wall mounting
- Contents: Power over Ethernet Injector (incl. power cable, 1.5 m), manual



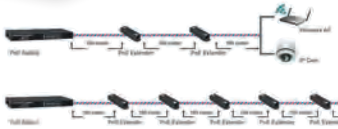

roline®
Designed for Professionals

	Order-No. – P.U.
ROLINE Gigabit PoE+ Extender, 2 Port	21.13.1188 – 12

ROLINE Industrial Gigabit PoE++ Mid-Span Injector (IEEE 802.3bt), 90W

NEW

The ROLINE Gigabit PoE Injector is a so-called PSE, a unit to supply power for e.g. surveillance cameras, and LAN devices such as access points, bridges and routers over Ethernet cable.

A PSE supplies the power together with the data in the network cable. There is no longer need for an additional own power supply of the device.

- Supply of data and power into the network cables
- Connectors: 1x RJ-45 port (Data In, Data input), 1x RJ-45 port (Data & Power Out, output data and power)
- Compatible with 802.3af and 802.3at
- Power via PoE++: up to 90W
- LED indicators for Power status, PD mode detection
- Output voltage: 56V DC
- Contents: Injector, manual







	Order-No. – P.U.
ROLINE Industrial Gigabit PoE++ Mid-Span Injector (IEEE 802.3bt), 90W	21.13.1203 – 1

roline® Designed for Professionals

ROLINE 19“ PoE MID-Span Power Supply

8-way injector that supplies IEEE 802.3af Power over Ethernet (PoE) compliant network accessories like e. g. workgroup switches, network cameras, access points, IP-phones with data and power over one LAN cable.

- Data-in Ports: 8x 10/100BaseTX, Data + Power-out Ports: 8x 10/100BaseTX
- Standards: IEEE 802.3 10BaseT , IEEE 802.3u 100BaseTX, IEEE 802.3x Flow Control, IEEE 802.3af PoE
- Max. power output: 48 VDC / 15.4 W per port
- PoE capable ports: Port 1-8 up to 15.4 W per port
- PoE power budget: 110 W
- Max. power consumption (without PoE): 122 W (12 W)
- Status LEDs
- Metal casing, 19“ rack-mountable (rack-mount kit included)
- Active cooling with integrated fan
- Internal power supply
- Dimensions (WxDxH): 440 x 220 x 44 mm
- Contents: Switch, power cord, rack mount kit, manual





	Order-No. – P.U.
ROLINE 19“ PoE MID-Span Power Supply, 8 Midspanports	21.13.1181 – 1

roline® Designed for Professionals

ROLINE High Power PoE Splitter, 30W

- High power PoE splitter which integrates Power over Ethernet (PoE) technology to PoE incapable network device by just using a single Cat.5 cable for both power and data transaction
- For easier, cost-effective PoE network installation, the PoE splitter is the best solution to protect original investment.
- IEEE 802.3at and 802.3af compliance
- Support 10BASE-T, 100BASE-TX, and 1000BASE-T
- Support Alternative A or Alternative B PoE input over Cat.5
- Provide a power class selection DIP for demanding power from PSE
- Support Type 1 PSE classification (for power up to 13 Watts min.) and Type 2 PSE 2-event classification (for power up to 30 Watts)
- Regulated DC power output with four optional voltages
- Flexible mounting support, light weight and compact
- Metal housing
- Dimension: 73 x 85 x 24 mm

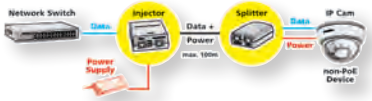





	Order-No. – P.U.
ROLINE High Power PoE Splitter, 30W	21.13.1172 – 1

roline® Designed for Professionals

ROLINE High Power PoE++ Splitter, 128W

High power PoE++ splitter which integrates Power over Ethernet (PoE) technology to PoE incapable network device by just using a single twisted pair cable for both power and data transaction.

- Enables PoE incapable network device with PoE capability
- IEEE 802.3at PoE+ and 802.3af PoE compliance
- Supports proprietary high power PoE++ up to 128W
- Supports 10BASE-T, 100BASE-TX, and 1000BASE-T
- Supports Alternative A or Alternative B PoE input over Cat.5/6
- Provides power class selection DIP for demanding power from PSE- allows user to select one from nine different classes for demanding power from a remote PoE switched port or mid-span injector
- Supports Type 1 PSE classification and Type 2 PSE 2-event classification
- Short-circuit protection, low voltage lock out, inrush current limit and thermal protection
- Flexible mounting support, light weight and compact
- Metal housing
- Dimension: 73 x 85 x 24 mm

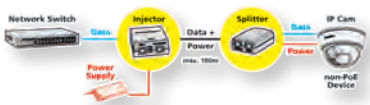





	Order-No. – P.U.
ROLINE High Power PoE++ Splitter, 128W	21.13.1173 – 1

roline® Designed for Professionals

ROLINE Fast Ethernet Switches for Industrial Environments, unmanaged

- Fast Ethernet switch with 5/8 shielded 10/100 Base-T copper ports
- Wide operating temperature range for temperature critical environment
- Auto MDI/MDI-X crossover function
- Supports IEEE 802.3x flow control for full-duplex operation
- Supports back-pressure flow control for half-duplex operation
- Supports DIN-rail mounting and panel mounting
- Fanless, rugged metal casing
- Operating Temperature:- 20 ºC- +70 ºC
- DC Input via terminal block or DC power jack (6.3mm / 2.0mm)
- Contents: Switch

21.13.1155/21.13.1156
- Power: Input: 5- 30 VDC, consumption: 2.15W resp. 2.3W (max)
- Dimensions: 95 x 40 x 80 mm (WxDxH)

21.13.1157
- Power: Input: 4.5- 50V DC, consumption: 3.4W (max.)
- Dimensions: 140 x 106 x 40 mm (WxDxH)





		Order-No.	– P.U.
ROLINE Industrial Switch, 5x RJ-45, unmanaged	A	21.13.1155	– 1
ROLINE Industrial Switch, 8x RJ-45, unmanaged	B	21.13.1156	– 1
ROLINE Industrial Switch, 16x RJ-45, unmanaged	C	21.13.1157	– 1

roline®
Designed for Professionals

ROLINE Gigabit Ethernet Industrial Switch

- Provides 8 10/100/1000Mbps copper ports
- Auto-negotiation
- Auto MDI/MDI-X crossover function
- Supports IEEE 802.3x flow control for full duplex
- Supports back pressure flow control for half duplex
- Fully non-blocking Gigabit full wire speed switching performance
- Jumbo frame support
- Alarm relay output for power failure event and configured port link fault events
- Wide operating temperature range
- Supports Green Ethernet power saving
- Supports IEEE 802.3az Energy Efficient Ethernet
- Supports DIN-Rail mounting and panel mounting
- Industrial-rated emission and immunity performance
- Contents: Switch, power supply, manual





roline®
Designed for Professionals

	Order-No.	– P.U.
ROLINE Gigabit Ethernet Industrial Switch, 8x	21.13.1161	– 1

ROLINE Fast Ethernet Switches with Fiber Port for Industrial Environments

- Eight Fast Ethernet copper ports and (optional) fiber ports
- Port 7 and Port 8 provide either 10/100BaseT or 100BaseFX (model dependent)
- All copper ports support auto-negotiation and auto-MDI/MDIX configuration
- Unmanaged switches for industrial environments
- Provides wire speed store and forward switching
- Wide operating temperature range for temperature critical environment
- Industrial-rated emission and immunity performance
- Fanless, extra rugged metal housing
- Support DIN rail mounting and panel mounting



roline®
Designed for Professionals

		Order-No.	– P.U.
ROLINE Industrial Switch, 7x RJ-45, 1x ST, unmanaged	A	21.13.1151	– 1
ROLINE Industrial Switch, 7x RJ-45, 1x SC, unmanaged	B	21.13.1152	– 1
ROLINE Industrial Switch, 6x RJ-45, 2x ST, unmanaged	C	21.13.1153	– 1
ROLINE Industrial Switch, 6x RJ-45, 2x SC, unmanaged	D	21.13.1154	– 1

ROLINE Gigabit Ethernet Industrial Switch, 5x RJ45 + 1x SFP

5-Port Gigabit network switch for use in a industrial environment - including an additional SFP-Port!

- Provides 5x 10/100/1000Mbps copper ports + 1x dual SFP slot
- Auto-negotiation
- Auto MDI/MDI-X crossover function
- Provides in-band web-based management interface
- Supports IEEE 802.3x flow control for full duplex
- Supports back pressure flow control for half duplex
- Supports port-based and 802.1Q Tag-based VLAN
- Provides QoS function
- Provides 802.1x authentication
- Supports configuration backup and upload
- Provides port mirroring function
- Supports 802.1w RSTP
- Provides IGMP snooping
- MAC Address Table 8K entries
- Buffer Memory 136K bytes
- Operating Power: +6.5VDC to +32VDC
- DC Power Input Screwed Terminal Block: +6.5VDC- +32VDC
- DC IN Jack:-D 6.3mm/+D 2.0mm
- External power adapter rating: +6.5VDC- +32VDC



roline®
Designed for Professionals

	Order-No.	–	P.U.
ROLINE Gigabit Ethernet Industrial Switch, 5x RJ45 + 1x SFP	21.13.1162	–	1

ROLINE Converter for Indusrial Environments, RS232 - Multimode Optical Fiber

- Transparent conversion for all RS-232 signals
- Designed for industrial environments
- RS-232 surge, ESD, and isolation protection
- DIN-rail and panel mounting support
- Wide power voltage range support
- Terminal block and DC plug power connectors
- Wide operating temperature range
- Industrial-rated emission and immunity performance
- Fanless, rugged metal housing
- Power: Input: 7-30 VDC









roline®
Designed for Professionals

		Order-No.	–	P.U.
ROLINE Industrial Converter RS232 - Multimode Optical Fiber, ST	A	21.13.1140	–	1
ROLINE Industrial Converter RS232 - Multimode Optical Fiber, SC	B	21.13.1141	–	1

ROLINE Converter for Industrial Environments, 10/100Base-T - Multimode Optical Fiber

- Support full wire speed copper-to-fiber media conversion for 10/100Mbit/s speed and media types
- Support auto-negotiation 10/100Mbit/s or forced mode on TP copper port
- Auto MDI/MDIX
- Provide comprehensive manual configuration settings
- Transparent conversion to 802.1Q VLAN tagged packets
- Low power consumption
- Two power interface types: screw terminal block and DC plug
- Supports DIN-rail mounting and optional screwed plane mounting
- Industrial-rated emission and immunity performance
- Fanless, rugged metal casing





roline®
Designed for Professionals

	Order-No.	–	P.U.
ROLINE Industrial Converter 10/100Base-T - Multimode Optical Fiber, ST	21.13.1142	–	1
ROLINE Industrial Converter 10/100Base-T - Multimode Optical Fiber, SC	21.13.1143	–	1
ROLINE Industrial Mini Converter, 10/100TX - 100FX (SC)	21.13.1147	–	1

ROLINE Industrial Converter, 10/100/1000T - 100/1000 Fiber

- Support full wire speed copper-to-fiber media conversion for 10/100Mbit/s speed and media types
- Tri-speed 10/100M/1Gbit/s copper to dual-speed 100M/1Gbit/s fiber conversion
- Comply with IEEE 802.3, 802.3u, 802.3ab, 802.3z standard
- Choice for SFPs for 100Base-FX (21.14.3499) or for Gigabit Ethernet (Mini-GBICs: 21.14.3500, 21.14.3501, 21.14.3502)
- Support full wire speed conversion for Gigabit copper to Gigabit fiber SFP port
- Support auto-negotiation with link partners
- Supports auto-negotiation 10/100Mbps or forced mode on the copper port
- Auto-MDI/MDIX on the copper port
- Ideal solution for multimode, short reach up to long reach single mode fiber, Bi-Di applications
- Provide dual-speed SFP on fiber port for mounting variety of fiber options
- Provide important LFPT (Link Fault Pass Through) media converter function
- Support Jumbo frame conversion
- Energy efficient ethernet (EEE) support
- Alarm events relay output
- Operation temp. :- 20 ºC- +70 ºC
- Supports DIN rail mounting
- DC Input via terminal block





	Order-No. – P.U.
ROLINE Industrial Converter, 10/100/1000T - 100/1000 Fiber	21.13.1149 – 1
ROLINE SFP 100Base-FX, Multimode, 2km	21.14.3499 – 10
ROLINE Mini-GBIC Modul SX/LC, Multi Mode	21.14.3500 – 10
ROLINE Mini-GBIC Module LX/LC, Single Mode, 10 km	21.14.3501 – 10
ROLINE Mini-GBIC Module LX/LC, Single Mode, 20 km	21.14.3502 – 10

roline®
Designed for Professionals

ROLINE Industrial Managed 8-Port L2 Gigabit Ethernet Switch

ROLINE Industrial Managed 8-Port L2 Gigabit Ethernet Switch which enables up to 8 connections of copper-based Ethernet equipment

- Provides 8 10/100/1000Mbps copper ports
- Complies with IEEE 802.3, 802.3u, 802.3ab, 802.3x and 802.3az standards
- Auto-negotiation / Auto MDI/MDI-X crossover function
- Supports IEEE 802.3x flow control for full duplex
- Supports back pressure flow control for half duplex
- Fully non-blocking Gigabit full wire speed switching performance
- Jumbo frame support (9.6K bytes)
- Alarm relay output for power failure event and software configured port link fault events
- 802.1Q VLAN / QoS (Quality of Service) function
- Port mirroring / IGMP snooping function
- Web management
- SNMP MIB-II support and trap function
- Wide operating temperature range
- Supports IEEE 802.3az Energy Efficient Ethernet
- Supports DIN-Rail mounting and panel mounting
- LED Indication Unit: Power status, per port: Speed/Link/Activity
- Metal casing
- Contents: Switch, manual



	Order-No. – P.U.
ROLINE Industrial Managed 8-Port L2 Gigabit Ethernet Switch	21.13.1136 – 1

roline®
Designed for Professionals

ROLINE Gigabit Switch 10-Port(8x RJ45+2x SFP) Layer2 PoE+ Smart Managed

- Eight 10/100/1000Mbps RJ-45 and two dual-speed SFP slots
- All copper ports support auto-negotiation and auto-MDI/MDI-X detection
- All copper ports are equipped with 802.3at-compliant PoE PSE
- Two SFP slots support dual speed for 100BASE-FX and 1000BASE-X SFP transceivers
- Full wire speed forwarding
- Supports 802.3x flow control for full-duplex and backpressure for half-duplex
- Supports SFP with Digital Diagnostic Monitoring (DDM)
- Provides PoE PSE redundancy function
- Provides fiber optical power alarm function, Automatic Laser Shutdown function
- Power voltage DC 12V-30V

- **Management:**
  - HTTP/HTTPS/SSHv2/CLI telnet/CLI console/SNMP v1/v2c/v3/RMON
  - DHCP/DHCPv6 client, DNS client, NTPv4
  - IPv6 support, System Syslog, Configuration down/upload, Software upload
  - private MIB for DDM monitoring, Remote boot, TFTP firmware update via SNMP

- **Security:**
  - NAS, 802.1X, MAC-based/Web/CLI authentication, IP MAC binding, TACACS+, IP source guard

- **Layer 2:**
  - QoS, 802.1Q/MAC-based/Protocol-based/Private/IP subnet VLAN, Port Isolation
  - Storm control for UC/MC/BC packets
  - Static MAC configuration
  - IGMP v2/v3 snooping, MLD v1/v2 snooping, DHCP snooping
  - Multiple Spanning Tree – MSTP, RSTP, STP

- **Auto Multi-Ring (KAMR) Technology:**
  - Fast failover response time
  - Auto recovery when failure is repaired
  - Supports up to Five redundant rings
  - Works with RSTP network
  - Supports ring member status monitoring for up to 100 units



	Order-No. – P.U.
ROLINE Gigabit Switch 10-Port(8x RJ45+2x SFP) Layer2 PoE+ Smart Managed	21.13.1137 – 1

roline®
Designed for Professionals

ROLINE Industrial Converter RJ-45, Fiber Optic 1000SX/LC

NEW



- Provides direct media conversion for Gigabit copper and Gigabit fiber
- Plug and play design with no configuration setting
- Support DIN-rail mounting and panel mounting
- Two power interface types: screw terminal block and DC Jack
- Low power consumption
- Support full wire speed conversion
- Support transparent conversion of any packet types with no packet length limitation
- Support auto-negotiation with link partners
- Provide link pass through between copper and fiber link
- Supports DIN-rail mounting
- Copper port:
- Shielded RJ-45,1000Mbps
- Auto-negotiation capable
- Auto-MDI/MDI-X crossover function
- Fiber port:
- SFP connector with pre-configured SFP fiber transceiver
- Far End Fault support
- Power: Input: 7- 30V DC, consumption: 2,5W (max.)
- Operating Temperature:- 20 °C- +70 °C
- Dimensions: 28 x 82 x 95 mm (WxDxH)

roline®
Designed for Professionals

	Order-No. – P.U.
ROLINE Industrial Converter RJ-45, Fiber Optic 1000SX/LC	21.13.1144 – 1

ROLINE Industrial Ethernet to Serial Media Converters (RS-232), 1x SFP



Network media converter from Ethernet (RJ-45) to serial (RS-232), for use in industrial environments - including an additional SFP port!

- Ethernet interface provides combo port of 10/100Mbps copper RJ-45 and 100M fiber SFP slot
- Serial interface RS-232
- Serial port supports baud-rate up to 230400bps
- Galvanic isolation on serial interface
- Data conversion throughput up to 230Kbps
- Wide range of direct power voltage support, DC 8V-60V
- Powered over Ethernet through RJ-45 interface (PoE-enabled)
- Alarm relay output for power failure, port link down and failure in connecting to server
- Application support for remote COM port, serial server over TCP, reverse telnet, pair connection, and serial broadcast
- Remote COM driver support for Windows PC
- Web-based and serial-based console configuration
- Event notification over SMTP and SNMP traps
- Designed for industrial environments with:
- Terminal block and DC plug (6.3 mm/2.0 mm) power connectors
- Fanless, rugged metal housing
- Power: Input: 8- 60 VDC
- Power over Ethernet:
- IEEE 802.3af, voltage input range: +36- +57VDC
- Operating Temperature:- 30 °C- +70 °C

roline®
Designed for Professionals



	Order-No. – P.U.
ROLINE Industrial Ethernet to Serial Media Converters (RS-232), 1x SFP	21.13.1138 – 1

ROLINE Industrial Converter RS422/485 - Multimode Optical Fiber, 1x SFP

%



Network media converter from Ethernet (RJ-45) to serial (RS-422/RS-485), for use in industrial environments - with an additional SFP port!

- Ethernet interface provides combo port of 10/100Mbps copper RJ-45 and 100M fiber SFP slot
- Serial interface RS-422/485
- Serial port supports baud-rate up to 230400bps
- Galvanic isolation on serial interface
- Data conversion throughput up to 230Kbps
- Wide range of direct power voltage support, DC 8V-60V
- Powered over Ethernet through RJ-45 interface (PoE-enabled)
- Alarm relay output for power failure, port link down and failure in connecting to server
- Application support for remote COM port, serial server over TCP, reverse telnet, pair connection, and serial broadcast
- Remote COM driver support for Windows PC
- Web-based and serial-based console configuration
- Event notification over SMTP and SNMP traps
- Designed for industrial environments with:
- Terminal block and DC plug (6.3 mm/2.0 mm) power connectors
- Fanless, rugged metal housing
- Power: Input: 8- 60 VDC
- Power over Ethernet:
- IEEE 802.3af, voltage input range: +36- +57VDC
- Operating Temperature:- 30 °C- +70 °C

roline®
Designed for Professionals



	Order-No. – P.U.
ROLINE Industrial Converter RS422/485 - Multimode Optical Fiber, 1x SFP	21.13.1139 – 1

TWISTED-PAIR-CABLES

OVERVIEW

On the following pages we keep repeating the aspects described herein.
– Please pay attention in particular on the notes shielding, transmission quality and fire protection.
– You will find the corresponding buttons and logos, placed again at the various products.



General Information

„Twisted pair“ is the English name for network cable with twisted or stranded wire pairs. Twisted pair cables provide a better protection against external alternating magnetic fields and electrostatic interference. Likewise, the crosstalk between adjacent pairs is reduced within the cable.

The copper wires of installing cables are made of solid wires while patch cables are made of stranded wires, usually produced with 7 individual wires.
– The diameter of the wires are defined in AWG. Solid wires typically have a thickness of 22 to 24 AWG, stranded wires AWG 24-27th

– The insulation of the wires as well as the sheath of the cable as a whole are often made of PVC, but now often made of a halogen-free low-smoke plastic mixture.

More on this in the section fire safety.

	Diameter		Cross section
AWG	(inch)	(mm)	(mm2)
22	0.0253	0.644	0.326
23	0.0226	0.573	0.258
24	0.0201	0.511	0.205
25	0.0179	0.455	0.162
26	0.0159	0.405	0.129
27	0.0142	0.361	0.102

Shielding

There are different approaches whether and how twisted-pair cables are being protect. In this case, significant differences in the quality of the cable are related to the intended use. Especially at higher transmission rates and for greater lengths shielded cables have a significantly better transmission quality.
– It is important that the decision is made consistently in terms of shielding for an installation.
– The following shielding types are within our product portfolio:

U / UTP (unscreened / unshielded twisted pair) or short-UTP:
– These cables have neither a common shield, nor an individual shield for each separate twisted pair.
– They have the lowest protection against electromagnetic influences.



F / UTP (Foiled / Unshielded Twisted Pair) or short FTP:
– The pairs are unshielded, the cable has a full shield aluminium-laminated foil that wraps all the pairs together.
– A version thereof is S / UTP (Screened / Unshielded Twisted Pair):
– The pairs are also unshielded, the overall shield consists of a tinned copper braid. The quality of this cable is much higher than for U / UTP cables.



SF / UTP (Foiled / Unshielded Twisted Pair) or simply S / FTP:
– The pairs are unshielded, there is an overall shield made of aluminium-laminated foil and also a tinned copper braid.
– The protective effect of this combination is again higher than with a simple shielding.



S / FTP (screened / shielded twisted pair) or simply S / FTP:
– All wire pairs are shielded with aluminium laminated foil, and there is an overall shielding of a tinned copper braid.
– The paired shielding attenuates the disruption of the pairs („crosstalk“) considerably. The combination of foil and braid also has the highest possible protection against electromagnetic influences from outside.
(Green: laminated aluminum foil / Red: tinned copper braid)



Quality

Twisted pair cable – as well as the associated components (e.g., junction boxes) – are classified according to transmission quality into classes or categories. Each class or category covers various requirements and quality standards. The concept of category (abbreviated „Cat.“) is mainly extracted from the American standardization (EIA / TIA), the class of the international (ISO / IEC) or from the European (EN).

– There is a distinction between data for individual parts or components (patch cables, connectors, installation cables, patch panels, etc.) and information for so-called links. Links can be used as a permanent link (Patch Panel + Installation + cable junction box) and as a channel (s. Figure above), which includes the patch cable.

– The class C to EA (corresponding categories 3 to 6A) are defined and valid. Class F (equivalent to Category 7) is defined, but the standardization is not further pursued. The FA class is currently in the process of standardization.

Two comments on it:
1. The Class EA (equivalent to Category 6A) was specified so that 10 Gigabit Ethernet can be transmitted.
2. For classes from F (equivalent categories as of 7) the current state of RJ-45 due to the close contact assembly cannot meet the required specifications.
– If patch cables are still designated „Cat.7“, it is just because the cable (material) meets the requirements of Cat.7 – even the highest quality RJ-45 maximum fulfills Cat.6A.

– In order to achieve optimal performance from your network, all components (patch cables, connectors, installation cables, patch panels, etc.) of a link must support the same category or class.
– The component with the lowest performance determines the transmission class (Link Class) of the entire system. When using e.g. a Cat 5e cable with Cat. 6 connector components, the entire link still only fulfils Class D (Cat.5e).



Category	Class	Max. Frequency	Application
3	C	16 MHz	Fast Ethernet
5e	D	100 MHz	Gigabit Ethernet
6	E	250 MHz	Gigabit Ethernet
6A	EA	500 MHz	10 Gigabit Ethernet
7	F	600 MHz	10 Gigabit Ethernet
8	G	2 GHz	40 Gigabit Ethernet

OVERVIEW

Fire protection: flame resistance, smoke-free, halogen-free

Particularly in large installations, it is important that attention is paid to the needs of fire protection. There are three important must– haves for the cable sheath and wire insulation. These properties are flame resistance, low-smoke and zero halogen.

Flame resistance:
– A cable is classified as flame retardant in accordance with IEC 60332, if it does not or only a specified short piece continues to burn, while the rest of the cable is set on fire for a long time.

Smoke poverty:
– The idea is that in case of fire not too much smoke may be released. To test the smoke poverty according to IEC 61034 cable pieces are placed in a chamber for a long time under fire and the light transmittance of the resulting smoke measured by photocell inside the chamber.

Halogen-free:
– The measurement of halogen-free is prescribed in IEC 60754. Halogens in the material on the one hand lead to combustion toxic fumes and on the other hand to the formation of corrosive or caustic acids.

LS0H:
– There is often also the name Low Smoke Zero Halogen (LSZH or LS0H) for the classification of cable material. In this case, although reference is made to smoke and zero halogen poverty, but not on the flame resistance.

Therefore, we call on the following pages individually the three properties described above.

**** Halogenfree***
Flame retardant
Low Smoke

Our products

Cat.5e | Cat.6 | Cat.6A | Cat.7 | Cat.8

Value® roline®
Designed for Professionals

VALUE Patchcords
VALUE has a budget patch cables product line with a very good price / performance ratio. Available in the Category 5e, 6, 6A and „7“ in various shielding types, lengths and colors.

ROLINE Patchcords
Quality makes the difference!
ROLINE offers a wide range of high quality patch cables with reserves in the transmission quality even in critical environments.
Available in the Category 5e, 6, 6A, „7“ and 8 in various shielding types, lengths and colors. 2 years warranty!

ROLINE Components – Recommandation for structured cabling

Category	Type	LAN Cable		Keystone / Wall Jack		Patch Panel/ Keystone		Patch Cord		Test / Certification
Cat.5e	UTP	21.15.0511	300m	25.16.8506	w/F	26.11.0349	blk	21.15.0505	5m	GHMT / z1325a-04-D
Cat.5e	UTP	21.15.0512	100m	25.16.8501	iv/F	26.11.0347	lgrey			
Cat.5e	S/FTP	21.15.0019	100m	25.16.8487	w/F	26.11.0328	blk	21.15.0305	5m	GHMT / z1326A-04-D
Cat.5e	S/FTP	21.15.0020	300m	25.16.8486	iv/F	26.11.0329	lgrey			
Cat.5e	S/FTP			25.16.8387	w/S					
Cat.5e	S/FTP			25.16.8386	iv/S					
Cat.6	UTP	21.15.0990	100m	26.11.0375	slim blk	26.11.0362	blk	21.15.0935	5m	Laboratory 100m Channel / Class E
Cat.6	UTP	21.15.0991	300m	26.11.0352	blk	26.11.0361	lgrey			
Cat.6	S/FTP	21.15.0890	100m	26.11.0377	slim slv.	26.11.0351	blk	21.15.0835	5m	Laboratory 100m Channel / Class E
Cat.6	S/FTP	21.15.0891	300m	26.11.0358	silver	26.11.0361	lgrey			
Cat.6A	UTP	21.15.1684	100m	26.11.0376	slim blk	26.11.0376	slim blk	21.15.2705	5m	Laboratory 100m Channel / Class EA
Cat.6A	UTP	21.15.1685	300m	26.11.0377	white	26.11.0377	white	21.15.2705	5m	
Cat.6A	S/FTP	21.15.0883	100m	21.17.0321		21.17.0321		21.15.2805	5m	Laboratory 100m Channel / Class EA
Cat.6A	S/FTP	21.15.0884	300m	21.17.0321		21.17.0321		21.15.2805	5m	

VALUE Components – Recommandation for structured cabling

Category	Type	LAN Cable		Keystone	Patch Panel		Patch Cord		Test / Certification
Cat.5e	UTP	21.99.0596	300m		26.99.0349	blk	21.99.0505	5m	Laboratory 100m Channel / Class D
Cat.5e	UTP					lgrey			
Cat.5e	S/FTP	21.99.0196	300m		26.99.0328	blk	21.99.0105	5m	Laboratory 100m Channel / Class D
Cat.5e	S/FTP				26.99.0329	lgrey			
Cat.6	UTP	21.99.0995	300m		26.99.0362	blk	21.99.0905	5m	Laboratory 100m Channel / Class E
Cat.6	UTP	21.99.0996	100m	26.99.0363	26.99.0355	lgrey			
Cat.6	S/FTP	21.99.0892	300m	25.99.0363	26.99.0353	blk	21.99.0805	5m	Laboratory 100m Channel / Class E
Cat.6	S/FTP				26.99.0354	lgrey			
Cat.6A	UTP	21.99.1685	300m	26.99.0377	26.99.0357	blk	21.99.0875	5m	Laboratory 100m Channel / Class EA
Cat.6A	UTP	21.99.1686	100m	26.99.0377	26.99.0357	blk			
Cat.6A	S/FTP	21.99.0884	300m	26.99.0366	26.11.0360	blk	21.99.0865	5m	Laboratory 100m Channel / Class EA
Cat.6A	S/FTP	21.99.0884	300m	26.99.0378	26.11.0361	lgrey			

w-white / blk - black / slv - silver

VALUE UTP Cable Cat.5e / Cl. D

CPR Class E_{ca}

- Structured building cabling
- Impedance: 100 Ohm
- Length: 300 m
- Colour: Grey
- Construction: 8 lines, copper, solid wire AWG24

Note: Solid Wire - CPR Class E_{ca}



	Order-No. – P.U.
VALUE UTP Cable Cat.5e / Cl. D, Solid Wire, AWG24, 300 m	21.99.0596 – 2

ROLINE UTP Cable Cat.5e / Cl. D

CPR Class E_{ca}

- Structured building cabling
- Impedance: 100 Ohm
- Colour: Grey
- Construction (21.15.0512/11): 8 lines, copper, solid wire AWG24
- Construction (21.15.0518/20): 8 lines, copper, stranded wire AWG24

Note: Solid Wire - CPR Class E_{ca}



	Order-No. – P.U.
ROLINE UTP Cable Cat.5e / Cl. D, Solid Wire, 100 m	21.15.0512 – 2
ROLINE UTP Cable Cat.5e / Cl. D, Solid Wire, 300 m	21.15.0511 – 1
ROLINE UTP Cable Cat.5e / Cl. D, Stranded Wire, 100 m	21.15.0518 – 2
ROLINE UTP Cable Cat.5e / Cl. D, Stranded Wire, 300 m	21.15.0520 – 1

VALUE FTP Cable Cat.5e / Cl. D

CPR Class E_{ca}

- Structured building cabling
- Impedance: 100 Ohm
- Length: 300 m
- Colour: Grey
- Construction: 8 lines, copper, solid wire, complete shielding with aluminium clad polyester foil

Note: Solid Wire - CPR Class E_{ca}



	Order-No. – P.U.
VALUE FTP Cable Cat.5e / Cl. D, Solid Wire, 300 m	21.99.0196 – 2

ROLINE FTP Cable Cat.5e / Cl. D

CPR Class E_{ca}

- Structured building cabling
- Impedance: 100 Ohm
- Colour: Grey
- Construction (21.15.0009/10): 8 lines, copper, solid wire AWG24, screening: alu-laminated foil
- Construction (21.15.0119/21): 8 lines, copper, stranded wire AWG26, screening: alu-laminated foil

Note: Solid Wire - CPR Class E_{ca}



	Order-No. – P.U.
ROLINE FTP Cable Cat.5e / Cl. D, Solid Wire, 100 m	21.15.0009 – 2
ROLINE FTP Cable Cat.5e / Cl. D, Solid Wire, 300 m	21.15.0010 – 1
ROLINE FTP Cable Cat.5e / Cl. D, Stranded Wire, 100 m	21.15.0119 – 2
ROLINE FTP Cable Cat.5e / Cl. D, Stranded Wire, 300 m	21.15.0121 – 1

ROLINE S/FTP Cable Cat.5e / Cl. D

CPR Class E_{ca}

- Structured building cabling
- Impedance: 100 Ohm
- Colour: Grey
- Construction (21.15.0019/20): 8 lines, copper, solid wire AWG24, screening: alu-laminated foil, shielding: copper braid
- Construction (21.15.0319/21): 8 lines, copper, stranded wire AWG26, screening: alu-laminated foil, shielding: copper braid
- Diagram: attenuation/near end crosstalk

Note: Solid Wire - CPR Class E_{ca}



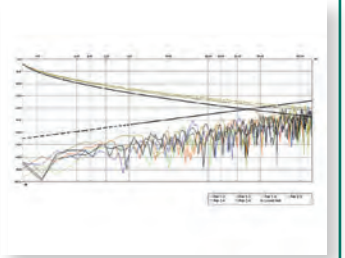

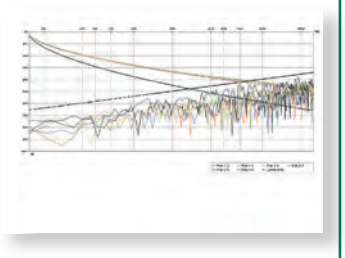

	Order-No. – P.U.
ROLINE S/FTP Cable Cat.5e / Cl. D, Solid Wire, 100 m	21.15.0019 – 2
ROLINE S/FTP Cable Cat.5e / Cl. D, Solid Wire, 300 m	21.15.0020 – 1
ROLINE S/FTP Cable Cat.5e / Cl. D, Stranded Wire, 100 m	21.15.0319 – 2
ROLINE S/FTP Cable Cat.5e / Cl. D, Stranded Wire, 300 m	21.15.0321 – 1

VALUE UTP Cable Cat.6 / Cl. E

CPR Class E_{ca}

- Structured building cabling
- Impedance: 100 Ohm
- Colour: Grey
- Construction: 8 lines, copper, solid wire AWG24

For a structured cabling system we recommend to use the following components:

VALUE Cat.6 UTP Cable, Solid Wire, AWG24, 300 m: 21.99.0995
VALUE Cat.6 Surface Mount Wall Jack, unshielded, white: 25.99.8394
VALUE Cat.6 19“ Patch Panel, 24 Ports, unshielded: 26.99.0351 (black), 26.99.0352 (grey)
VALUE Cat.6 UTP Patch Cord, grey, 5 m: 21.99.0905

Our in-house laboratory has tested this cable-plug combination, in a Channel of 100 meters, in compliance with Class E specifications.

Note: Solid Wire - CPR Class E_{ca}

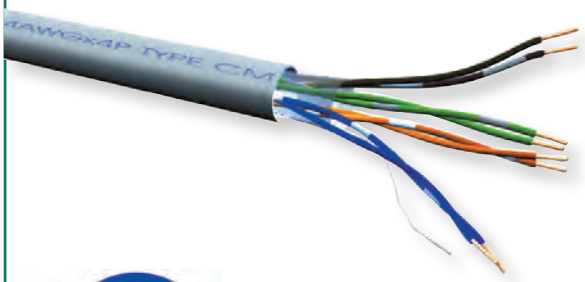

	Order-No. – P.U.
VALUE UTP Cable Cat.6 / Cl. E, Solid Wire, AWG24, 300 m	21.99.0995 – 2

VALUE UTP Cable Cat.6 / Cl. E

CPR Class D_{ca}

- Structured building wiring
- Impedance: 100 Ohm
- Colour: Grey
- Construction: 8 lines, copper, solid wire AWG24

The Euroclass table defines seven different classes of performance (A_{ca}, $B1_{ca}$, $B2_{ca}$, C_{ca}, D_{ca}, E_{ca} and F_{ca}) on the basis of their reaction to fire performance, such as heat emission and flame propagation. These are the main classification criteria, but additional criteria apply only to and are taken into account for classes $B1_{ca}$, $B2_{ca}$, C_{ca} and D_{ca} like:
- s: smoke production from s1a (visibility better than 80%) to s3 (very low visibility)
- d: flaming droplets from d0 (no flaming droplets) to d2 (no requirements)
- a: acidity of emissions from a1 (very low corrosiveness) to a3 (no requirements)

For a structured cabling system we recommend to use the following components:

VALUE Cat.6 UTP Cable, Solid Wire, AWG23, 100 m: 21.99.0996
VALUE Cat.6 Surface Mount Wall Jack, unshielded, white: 25.99.8394
VALUE Cat.6 19“ Patch Panel, 24 Ports, unshielded: 26.99.0351 (black), 26.99.0352 (grey)
VALUE Cat.6 UTP Patch Cord, grey, 5 m: 21.99.0905

Our in-house laboratory has tested this cable-plug combination, in a Channel of 100 meters, in compliance with Class E specifications.

Note: Solid Wire - CPR Class D_{ca}

- **D_{ca}: s2, d1, a1**



	Order-No. – P.U.
VALUE UTP Cable Cat.6 / Cl. E, Solid Wire, DCa, 100 m	21.99.0996 – 4

ROLINE UTP Cable Cat.6 / Cl. E

CPR Class E_{ca}

- Structured building cabling
- Impedance: 100 Ohm
- Colour: Grey
- Construction: 8 lines, copper, solid wire

For a structured cabling system we recommend to use the following components:
ROLINE Cat.6 UTP Cable, Solid Wire, AWG23: 21.15.0990 (100 m), 21.15.0991 (300 m)

ROLINE Cat.6 (Class E) Keystone Jack, RJ-45, UTP, tool-free, black 26.11.0352
ROLINE Cat.6 (Class E) Keystone Jack, RJ-45, UTP, tool-free, white 26.11.0353

ROLINE Cat.6 19“ Patch Panel, 24 Ports, unshielded: 26.11.0355 (light grey), 26.11.0362 (black), ROLINE Cat.6 UTP Patch Cord, grey, 5 m: 21.15.0935.

This product combination has been measured in our own laboratory in the Channel of 100 meters, in compliance with Class E specifications

Note: Solid Wire - CPR Class E_{ca}



roline®
Designed for Professionals

** Halogenfree Flame retardant Low Smoke*

	Order-No. – P.U.
ROLINE UTP Cable Cat.6 / Cl. E, Solid Wire, AWG23, 100 m	21.15.0990 – 1
ROLINE UTP Cable Cat.6 / Cl. E, Solid Wire, AWG23, 300 m	21.15.0991 – 1
ROLINE UTP Cable Cat.6 / Cl. E, Stranded, AWG23, 300 m	21.15.0992 – 1
ROLINE UTP Cable Cat.6 / Cl. E, Solid Wire, AWG24, 300m, **halogen-free***	21.15.1789 – 1

VALUE S/FTP (PiMF) Cable Cat.6 / Cl. E

CPR Class E_{ca}

- Structured building cabling
- Impedance: 100 Ohm
- Colour: Grey
- Construction:
- 8 lines, solid copper wire, AWG23
- pairs shielded with aluminium foil
- complete shielding in tinned copper braid

For a structured cabling system we recommend to use the following components:
21.99.0892 VALUE S/FTP Cat 6/Class E solid wire installation cable
25.99.8392 VALUE Cat.6/Class E Surface box
26.99.0353/26.99.0354 VALUE Cat.6/Class E 19“ Patch Panel, black/grey
21.99.0805 VALUE S/FTP Patch Cable Cat.6, 5m

This product combination has been measured in our own laboratory in the Channel of 100 meters, in compliance with Class E specifications

Note: Solid Wire - CPR Class E_{ca}

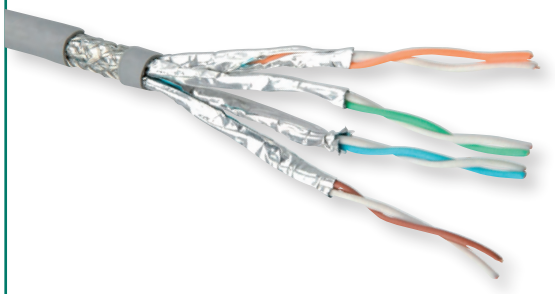

	Order-No. – P.U.
VALUE S/FTP-(PiMF) Cable Cat.6 / Cl. E, Solid Wire, 300 m	21.99.0892 – 1

ROLINE S/FTP-(PiMF) Cable Cat.6/Cl. E

CPR Class E_{ca}

- Structured building cabling
- Impedance: 100 Ohm
- Colour: Grey
- Construction:
- 8 lines, solid copper wire, AWG23
- pairs shielded with aluminium foil
- complete shielding in tinned copper braid

Note: Solid Wire - CPR Class E_{ca}

For a structured cabling system we recommend to use the following components:

ROLINE Cat.6 S/FTP Cable, Solid Wire, AWG23: 21.15.0890 (100 m), 21.15.0891 (300 m)

ROLINE Cat.6 Surface Mount Wall Jack, shielded: 25.16.8392 (white)

ROLINE Cat.6 19" Patch Panel, 24 Ports, shielded: 26.11.0351 (light grey), 26.11.0361 (black),

ROLINE Cat.6 S/FTP Patch Cord, grey, 5 m: 21.15.0835.

roline® Designed for Professionals

** Halogenfree Flame retardant Low Smoke*

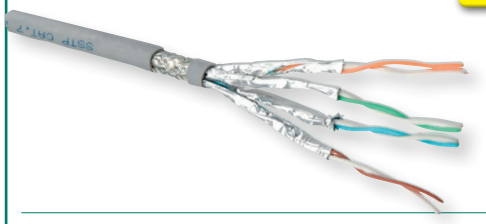

	Order-No. – P.U.
ROLINE S/FTP-(PiMF) Cable Cat.6/Cl. E, Solid Wire, AWG 23, 100 m	21.15.0890 – 2
ROLINE S/FTP-(PiMF) Cable Cat.6/Cl. E, Solid Wire, AWG 23, 300 m	21.15.0891 – 1
ROLINE S/FTP-(PiMF) Cable Cat.6/Cl. E, Stranded, AWG 23, 300 m	21.15.0892 – 1
ROLINE S/FTP-(PiMF) Cable Cat.6/Cl. E, Solid Wire, AWG 23, 300m, **halogen-free***	21.15.1889 – 1

VALUE UTP Cable Cat.6A / Cl. EA

CPR Class E_{ca}

- Cable for structured building cabling
- 300 meter/box
- Impedance: 100 Ohm
- Construction:
  - 8 lines, solid copper wire
- Colour: grey

Note: Solid Wire - CPR Class E_{ca}

For a structured unshielded cabling system Cat.6A we recommend to use the following components:

VALUE Cat.6A UTP Cable, Solid Wire: 21.99.1685(300m)

Flush Mount Wall Jack for Keystones, 2-port: 25.16.8579
ROLINE Cat.6 Keystone, RJ45, unshielded: 26.11.0337

19" Keystone Patch Panel, 24 Ports, unshielded: 26.11.0358 (black)/26.11.0357 (grey)

VALUE Cat.6A UTP Patch Cord, grey, 5 m: 21.99.0875

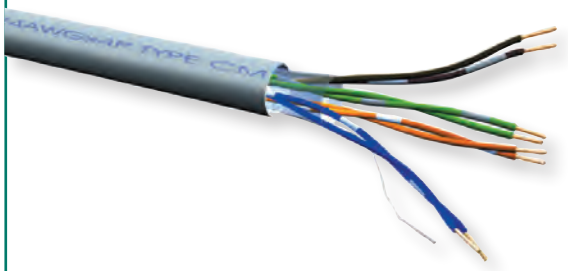

Value®

	Order-No. – P.U.
VALUE UTP Cable Cat.6A / Cl. EA, Solid Wire, 300 m	21.99.1685 – 2

ROLINE UTP Cable Cat.6A / Cl. EA

CPR Class E_{ca}

- Cables for structured building cabling, data rates up to 10 Gbit/s
- 100 or 300 meter/box
- Impedance: 100 Ohm
- Construction:
  - 8 lines, solid copper wire
- Colour: grey

Note: Solid Wire - CPR Class E_{ca}

For a structured unshielded cabling system Cat.6A we recommend to use the following components:

ROLINE Cat.6A UTP Cable, Solid Wire: 21.15.1685(300m)

Flush Mount Wall Jack for Keystones, 2-port: 25.16.8579
ROLINE Cat.6 Keystone, RJ45, unshielded: 26.11.0337

19" Keystone Patch Panel, 24 Ports, unshielded: 26.11.0356/26.11.0357

ROLINE Cat.6A UTP Patch Cord, grey, 5 m: 21.15.2705



roline® Designed for Professionals

	Order-No. – P.U.
ROLINE UTP Cable Cat.6A / Cl. EA, Solid Wire, 100 m	21.15.1684 – 4
ROLINE UTP Cable Cat.6A / Cl. EA, Solid Wire, LSOH, 100 m	21.15.1686 – 4
ROLINE UTP Cable Cat.6A / Cl. EA, Solid Wire, 300 m	21.15.1685 – 2
ROLINE UTP Cable Cat.6A / Cl. EA, Solid Wire, LSOH, 300 m	21.15.1687 – 2
ROLINE UTP Cable Cat.6A / Cl. EA, Stranded, 300 m	21.15.1682 – 1

VALUE UTP Cable Cat.6A / Cl. EA

CPR Class D_{ca}

- Cable for structured building cabling
- 300 meter/box
- Impedance: 100 Ohm
- Construction:
  - 8 lines, solid copper wire
- Colour: grey

The Euroclass table defines seven different classes of performance (A_{ca}, $B1_{ca}$, $B2_{ca}$, C_{ca}, D_{ca}, E_{ca} and F_{ca}) on the basis of their reaction to fire performance, such as heat emission and flame propagation. These are the main classification criteria, but additional criteria apply only to and are taken into account for classes $B1_{ca}$, $B2_{ca}$, C_{ca} and D_{ca} like:
- s: smoke production from s1a (visibility better than 80%) to s3 (very low visibility)
- d: flaming droplets from d0 (no flaming droplets) to d2 (no requirements)
- a: acidity of emissions from a1 (very low corrosiveness) to a3 (no requirements)

For a structured unshielded cabling system Cat.6A we recommend to use the following components:

VALUE Cat.6A UTP Cable, Solid Wire: 21.99.1686 (100m)

Flush Mount Wall Jack for Keystones, 2-port: 25.16.8579
ROLINE Cat.6 Keystone, RJ45, unshielded: 26.11.0337

19" Keystone Patch Panel, 24 Ports, unshielded: 26.11.0358 (black)/26.11.0357 (grey)

VALUE Cat.6A UTP Patch Cord, grey, 5 m: 21.99.0875

Note: Solid Wire - CPR Class D_{ca}

- **D_{ca}: s2, d1, a1**

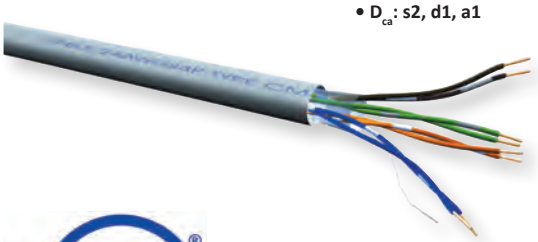

Value®

Halogenfree Flame retardant Low Smoke

	Order-No. – P.U.
VALUE UTP Cable Cat.6A / Cl. EA, Solid Wire, D_{ca}, 100 m	21.99.1686 – 4

VALUE S/FTP (PiMF) Cable Cat.6A / Cl. EA

CPR Class E_{ca}

- Cable for structured building cabling
- 300 meter / box
- Impedance: 100 Ohm
- Construction:
  - 8 lines, solid copper wire, AWG23
  - pairs shielded with aluminium foil
  - complete shielding in tinned copper braid
- Colour: grey

Note: Solid Wire - CPR Class E_{ca}

For a structured Cat. 6A S/FTP Cabling we recommend to use the following components:
The following products combination has been tested:
21.99.0884 VALUE S/FTP Cable, Cat. 6A, Solid Wire
25.16.8484 Surface Wall Mount Frame
25.16.8579 Flush Mount Wall Oulet for Keystones, 2port
26.99.0366 VALUE Cat.6A Keystone, RJ-45, shielded, toolless
26.11.0359/.0360 Keystone 19'' Module frame Cat.5/Cat.6/Cat.6A, 24 Ports, shielded grey/black
21.99.0865 VALUE S/FTP Patch Cord Cat.6A, grey, 5m

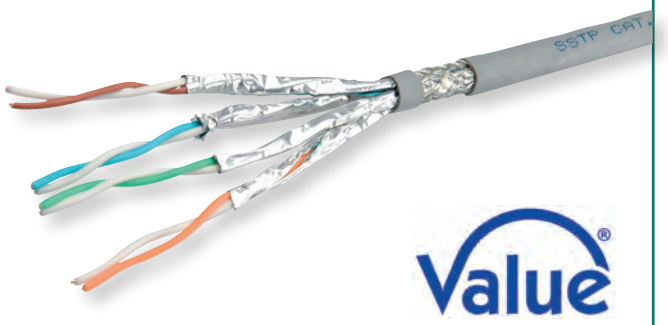

Value®

	Order-No.	P.U.
VALUE S/FTP (PiMF) Cable Cat.6A / Cl. EA, Solid Wire, 300 m	21.99.0884	1

ROLINE S/FTP (PiMF) Cable Cat.6A / Cl. EA

CPR Class E_{ca}

- Cable for structured building cabling
- 300 meter / box ; 100 meter as coil
- Impedance: 100 Ohm
- Construction:
  - 8 lines, solid copper wire, AWG23
  - pairs shielded with aluminium foil
  - complete shielding in tinned copper braid
- Colour: grey

Note: Solid Wire - CPR Class E_{ca}

For a structured Cat. 6A S/FTP Cabling we recommend to use the following components:
21.15.0883 ROLINE S/FTP Cable, Cat. 6A, Solid Wire, AWG23
25.16.8579 Flush Mount Wall Oulet for Keystones, 2-port
26.11.0367 ROLINE Cat. 6A Keystone, RJ-45, Shielded, Silver
26.11.0359/.0360 ROLINE Patchpanel for Keystones 19", 24x
21.15.2805 ROLINE S/FTP Patch Cable Cat. 6A, Grey

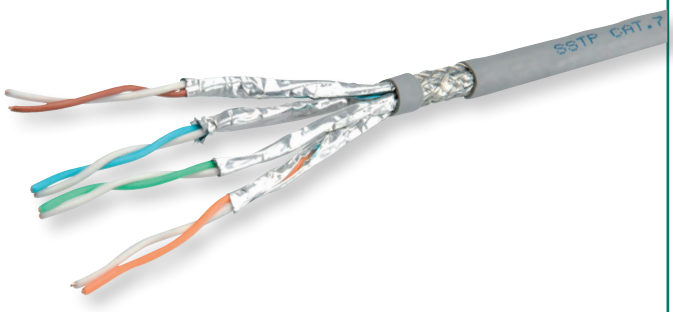

roline®
Designed for Professionals

Halogenfree
Flame retardant
Low Smoke

	Order-No.	P.U.
ROLINE S/FTP (PiMF) Cable Cat.6A / Cl. EA, Solid Wire, **LSOH**, 100 m	21.15.0883	4
ROLINE S/FTP (PiMF) Cable Cat.6A / Cl. EA, Solid Wire, **LSOH**, 300 m	21.15.0884	1
ROLINE S/FTP (PiMF) Cable Cat.6A / Cl. EA, Stranded, 300 m	21.15.0882	1

ROLINE S/FTP (PiMF) Cable Cat.7 / Cl. F

CPR Class E_{ca}

- Cable for structured building cabling
- Impedance: 100 Ohm
- 100 meter as coil / 300 meter as box
- 3P certified
- Construction: 8 lines, solid copper wire, AWG23 / Pairs shielded with aluminium foil / Complete shielding in copper braid

Note: Solid Wire - CPR Class E_{ca}

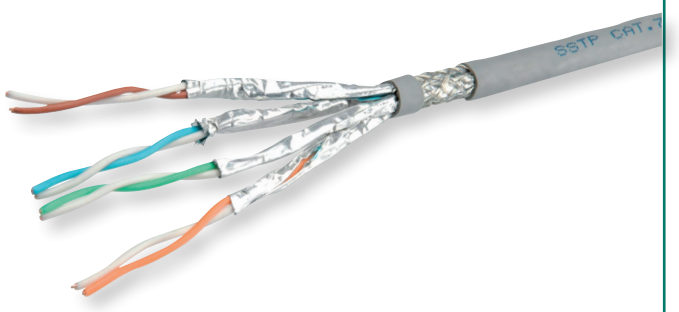

roline®
Designed for Professionals

Halogenfree
Flame retardant
Low Smoke

	Order-No.	P.U.
ROLINE S/FTP (PiMF) Cable Cat.7 / Cl. F, Solid Wire, 100m	21.15.0001	5
ROLINE S/FTP (PiMF) Cable Cat.7 / Cl. F, Solid Wire, 300m	21.15.0003	1
ROLINE S/FTP (PiMF) Cable Cat.7 / Cl. F, Solid Wire, **LSOH**, 100 m	21.15.0002	2
ROLINE S/FTP (PiMF) Cable Cat.7 / Cl. F, Solid Wire, **LSOH**, 300 m	21.15.0004	1

VALUE S/FTP Cable Cat.7 / Cl. F

CPR Class D_{ca}

- Cable for structured building cabling
- 100 meter / box
- Impedance: 100 Ohm
- Construction:
- 8 lines, solid copper wire, AWG23
- pairs shielded with aluminium foil
- complete shielding in tinned copper braid
- Colour: grey

The Euroclass table defines seven different classes of performance (A_{ca}, $B1_{ca}$, $B2_{ca}$, C_{ca}, D_{ca}, E_{ca} and F_{ca}) on the basis of their reaction to fire performance, such as heat emission and flame propagation. These are the main classification criteria, but additional criteria apply only to and are taken into account for classes $B1_{ca}$, $B2_{ca}$, C_{ca} and D_{ca} like:
- s: smoke production from s1a (visibility better than 80%) to s3 (very low visibility)
- d: flaming droplets from d0 (no flaming droplets) to d2 (no requirements)
- a: acidity of emissions from a1 (very low corrosiveness) to a3 (no requirements)

For a structured Cat. 6a S/FTP Cabling we recommend to use the following components:
The following products combination has been tested:
21.99.0885 VALUE S/FTP Cable, Cat. 7, Solid Wire
25.16.8484 Surface Wall Mount Frame
25.16.8579 Flush Mount Wall Oulet for Keystones, 2port
26.99.0366 VALUE Cat.6a Keystone, RJ-45, shielded, toolless
26.11.0359/.0360 Keystone 19'' Module frame Cat.5/Cat.6/Cat.6a, 24 Ports, shielded grey/black
21.99.0865 VALUE S/FTP Patch Cord Cat.6a, grey, 5m

Note: Solid Wire - CPR Class D_{ca}

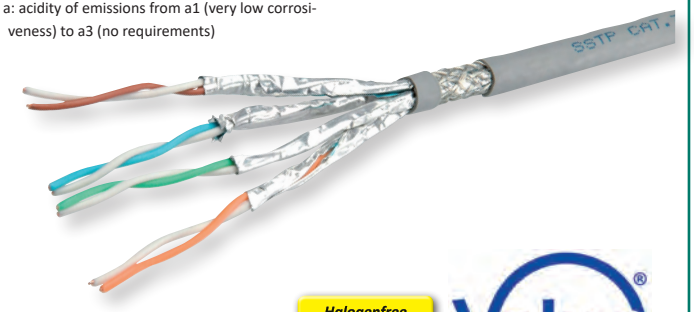

Halogenfree
Flame retardant
Low Smoke

Value®

	Order-No.	P.U.
VALUE S/FTP Cable Cat.7 / Cl. F (Class F), Solid Wire, DCa	21.99.0885	4

ROLINE UTP Patch Cord Cat.5e / Cl. D, Retractable

- For a fast network connection without any cable hassle, ideal for travellers
- Flat cable with two unshielded RJ-45 connectors
- In housing with auto-roll-extender, stretches out to a total length of 2 m
- Length scales in inches and centimetres printed on cable
- Cable colour: Black



roline®
Designed for Professionals

	Order-No.	P.U.
ROLINE UTP Patch Cord Cat.5e / Cl. D, black, 2.0 m, Retractable	21.15.0591	20

VALUE UTP Patch Cord Cat.5e / Cl. D

Cat.5e Class D | U/UTP

- Prepared cable with unshielded RJ-45 plug on both ends (without coding) incl. kink protection.
- Connection cable for structured building cabling.
- Impedance: 100 Ohm.
- Contact settings 1:1 in accordance with EIA / TIA 568, 8 lines.
- Construction: internal line 8 wires

Value®



	Order-No.	P.U.
VALUE UTP Patch Cord Cat.5e / Cl. D, grey, 0.5 m	21.99.0500	250
VALUE UTP Patch Cord Cat.5e / Cl. D, grey, 1.0 m	21.99.0501	200
VALUE UTP Patch Cord Cat.5e / Cl. D, grey, 2.0 m	21.99.0502	150
VALUE UTP Patch Cord Cat.5e / Cl. D, grey, 3.0 m	21.99.0503	100
VALUE UTP Patch Cord Cat.5e / Cl. D, grey, 5.0 m	21.99.0505	70
VALUE UTP Patch Cord Cat.5e / Cl. D, grey, 7.0 m	21.99.0507	50
VALUE UTP Patch Cord Cat.5e / Cl. D, grey, 10.0 m	21.99.0510	40
VALUE UTP Patch Cord Cat.5e / Cl. D, grey, 15.0 m	21.99.0515	25
VALUE UTP Patch Cord Cat.5e / Cl. D, grey, 20.0 m	21.99.0520	20

ROLINE UTP Patch Cord Cat.5e / Cl. D

Cat.5e Class D | U/UTP

- Patch cable for networking connections between devices.
- Prepared unshielded Twisted Pair cable with RJ-45 connectors on both ends. Durable due to moulded kink protection.
- Flexible cable, suitable for narrow bending. High quality plugs with gold plated contacts.
- Contact settings 1:1, in accordance with the EIA/TIA 568 standard.
- Construction: 4-pair stranded copper wire.

roline®
Designed for Professionals



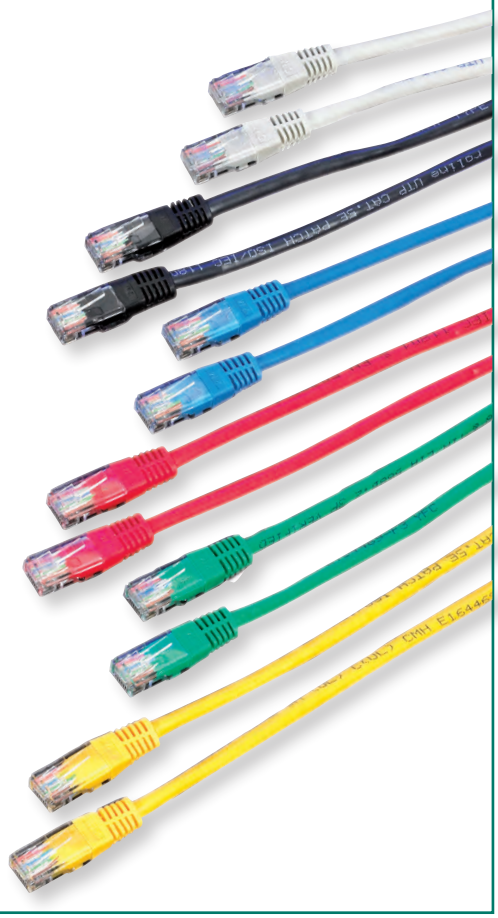

Length	grey	red	yellow	green	blue	black	P.U.
0.5 m	21.15.0500	21.15.0521	21.15.0522	21.15.0523	21.15.0524	21.15.0525	100
1 m	21.15.0501	21.15.0531	21.15.0532	21.15.0533	21.15.0534	21.15.0535	100
2 m	21.15.0502	21.15.0541	21.15.0542	21.15.0543	21.15.0544	21.15.0545	100
3 m	21.15.0503	21.15.0551	21.15.0552	21.15.0553	21.15.0554	21.15.0555	50
5 m	21.15.0505	21.15.0561	21.15.0562	21.15.0563	21.15.0564	21.15.0565	50
7 m	21.15.0507	—	—	—	—	—	50
10 m	21.15.0510	21.15.0421	21.15.0422	21.15.0423	—	—	40
15 m	21.15.0515	21.15.0431	—	21.15.0433	21.15.0434	21.15.0435	30
20 m	21.15.0519	21.15.0441	—	21.15.0443	21.15.0444	21.15.0445	20

VALUE FTP Patch Cord Cat.5e / Cl. D

Cat.5e Class D | F/UTP

- Prepared cable with screened RJ-45 plug on both ends (without coding) incl. kink protection.
- Connection cable for structured building cabling.
- Impedance: 100 Ohm.
- Contact settings 1:1 in accordance with EIA / TIA 568, 8 lines.
- Construction: Internal line 8 wires. Complete screening: aluminium laminated foil
- Colour: grey



	Order-No.	P.U.
VALUE FTP Patch Cord Cat.5e / Cl. D, grey, 0.5 m	21.99.0100	250
VALUE FTP Patch Cord Cat.5e / Cl. D, grey, 1.0 m	21.99.0101	200
VALUE FTP Patch Cord Cat.5e / Cl. D, grey, 2.0 m	21.99.0102	150
VALUE FTP Patch Cord Cat.5e / Cl. D, grey, 3.0 m	21.99.0103	100
VALUE FTP Patch Cord Cat.5e / Cl. D, grey, 5.0 m	21.99.0105	70
VALUE FTP Patch Cord Cat.5e / Cl. D, grey, 7.0 m	21.99.0107	50
VALUE FTP Patch Cord Cat.5e / Cl. D, grey, 10.0 m	21.99.0110	40
VALUE FTP Patch Cord Cat.5e / Cl. D, grey, 15.0 m	21.99.0115	25
VALUE FTP Patch Cord Cat.5e / Cl. D, grey, 20.0 m	21.99.0120	20

ROLINE FTP Patch Cord Cat.5e / Cl. D, crossover / Adapter

Cat.5e Class D | F/UTP

21.15.0203
- Prepared cable with shielded RJ-45 connectors on both ends, incl. kink protection
- Crossed version for special applications such as the cascading of hubs/switches or for the direct connection between two PCs
- Construction: 8 wires copper; complete shielding aluminium laminated foil
- Colours (cable and connectors): Grey

21.17.3077
- Converts each patch cable into a crossover patch cable, which is necessary for special applications such as cascading of hubs / switches or for the direct connection of two PCs
- S/FTP version, shielded, also used for UTP applications
- Cat 5e compliant, Gigabit compatible
- Suitable for 10/100/1000Base-T applications
- Crossover assignment pairs (pair 1,2 with 3,6)
- Dimensions: 45 x 20 x 18 mm



	Order-No.	P.U.
ROLINE FTP Patch Cord Cat.5e / Cl. D, crossover, grey, 3 m	21.15.0203	50
ROLINE RJ45 Crossover Adapter STP, Cat.5e / Cl. D	21.17.3077	50

ROLINE FTP Patch Cord Cat.5e / Cl. D

Cat.5e Class D | F/UTP

- Patch cable for networking connections between devices. Prepared double shielded Twisted Pair cable with screened RJ-45 connectors on both ends. Durable due to moulded kink protection.
- Flexible cable, suitable for narrow bending. High quality plugs with gold plated contacts.
- Contact settings 1:1, in accordance with the EIA/TIA 568 standard.
- Construction: 4-pair stranded copper wire. Complete shielding with aluminium clad polyester foil.





Length	grey	red	yellow	green	blue	black	P.U.
0.5 m	21.15.0100	21.15.0181	21.15.0182	21.15.0183	21.15.0184	21.15.0185	100
1 m	21.15.0101	21.15.0131	21.15.0132	21.15.0133	21.15.0134	21.15.0135	100
2 m	21.15.0102	21.15.0141	21.15.0142	21.15.0143	21.15.0144	21.15.0145	100
3 m	21.15.0103	21.15.0151	21.15.0152	21.15.0153	21.15.0154	21.15.0155	50
5 m	21.15.0105	21.15.0161	21.15.0162	21.15.0163	21.15.0164	21.15.0165	50
7 m	21.15.0107	—	—	—	—	—	50
10 m	21.15.0110	21.15.0451	21.15.0452	21.15.0453	—	—	40
15 m	21.15.0115	21.15.0461	21.15.0462	—	21.15.0464	—	30
20 m	21.15.0120	21.15.0471	21.15.0472	—	—	21.15.0475	20

VALUE S/FTP Patch Cord Cat.5e / Cl. D

Cat.5e Class D | SF/UTP

- Prepared cable with screened RJ-45 plug on both ends incl. kink protection
- Connection cable for a structured building cabling
- Impedance: 100 Ohm
- Contact settings 1:1 in accordance with EIA/TIA568
- Construction: Internal line 8 wires copper wire
- Complete screening aluminium laminated foil with additional braided shield



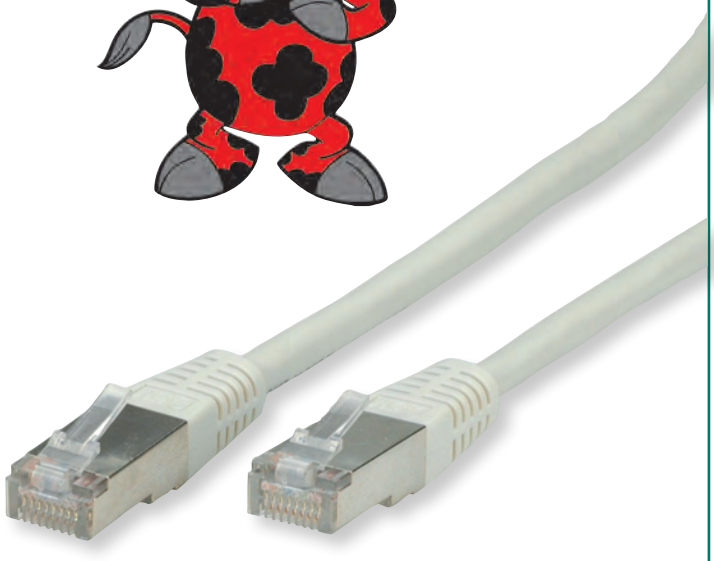

	Order-No.	P.U.
VALUE S/FTP Patch Cord Cat.5e / Cl. D, grey, 0.5 m	21.99.0300	250
VALUE S/FTP Patch Cord Cat.5e / Cl. D, grey, 1.0 m	21.99.0301	200
VALUE S/FTP Patch Cord Cat.5e / Cl. D, grey, 2.0 m	21.99.0302	150
VALUE S/FTP Patch Cord Cat.5e / Cl. D, grey, 3.0 m	21.99.0303	100
VALUE S/FTP Patch Cord Cat.5e / Cl. D, grey, 5.0 m	21.99.0305	70
VALUE S/FTP Patch Cord Cat.5e / Cl. D, grey, 7.0 m	21.99.0307	50
VALUE S/FTP Patch Cord Cat.5e / Cl. D, grey, 10.0 m	21.99.0310	40
VALUE S/FTP Patch Cord Cat.5e / Cl. D, grey, 15.0 m	21.99.0315	25
VALUE S/FTP Patch Cord Cat.5e / Cl. D, grey, 20.0 m	21.99.0320	20

ROLINE S/FTP Patch Cord Cat.5e / Cl. D

Cat.5e Class D | SF/UTP

- Patch cable for networking connections between devices.
- Prepared double shielded Twisted Pair cable with screened RJ-45 connectors on both ends. Durable due to moulded kink protection.
- Flexible cable, suitable for narrow bending. High quality plugs with gold plated contacts.
- Contact settings 1:1, in accordance with the EIA/TIA 568 standard.
- Construction: 4-pair stranded copper wire.
- Complete braid shielding and aluminium clad polyester foil.

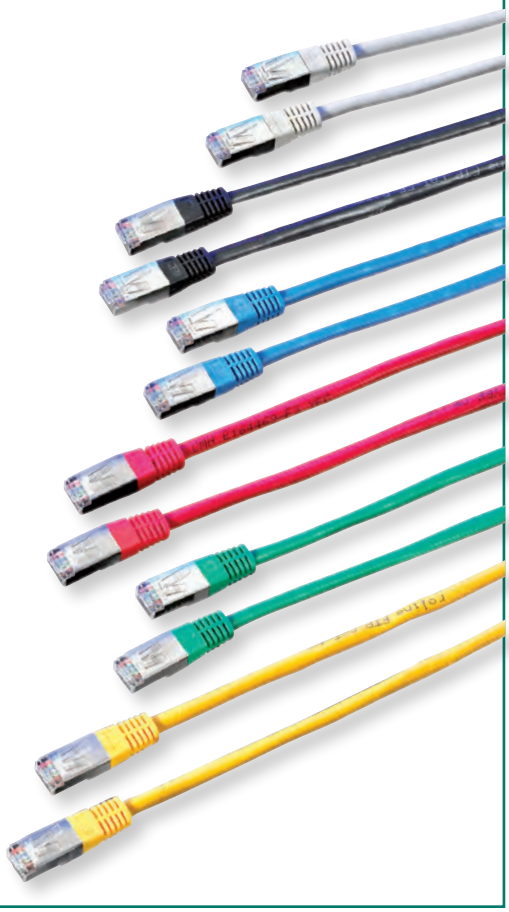

Length	grey	red	yellow	green	blue	black	P.U.
0.5 m	21.15.0300	21.15.0381	21.15.0382	21.15.0383	21.15.0384	21.15.0385	100
1 m	21.15.0301	21.15.0331	21.15.0332	21.15.0333	21.15.0334	21.15.0335	100
2 m	21.15.0302	21.15.0341	21.15.0342	21.15.0343	21.15.0344	21.15.0345	100
3 m	21.15.0303	21.15.0351	21.15.0352	21.15.0353	21.15.0354	21.15.0355	50
5 m	21.15.0305	21.15.0361	21.15.0362	21.15.0363	21.15.0364	21.15.0365	50
7 m	21.15.0307	—	—	—	—	—	50
10 m	21.15.0310	%	21.15.0722	%	21.15.0724	—	40
15 m	21.15.0315		21.15.0732		21.15.0734	21.15.0735	30
20 m	21.15.0320	21.15.0741	21.15.0742	21.15.0743	21.15.0744	—	20

VALUE UTP Patch Cord, Cat.6 / Cl. E

Cat.6 Class E | U/UTP



- Patch cable for networking connections between devices.
- Prepared unshielded Twisted Pair cable with RJ-45 connectors on both ends.
- Durable due to moulded kink protection.
- Flexible cable, suitable for narrow bending.
- Plugs with gold plated contacts.
- Contact settings 1:1, in accordance with the EIA/TIA 568 standard
- Construction: 4-pair stranded wire.

For a structured cabling system we recommend to use the following components:
VALUE Cat.6 UTP Cable, Solid Wire, AWG24, 300 m: 21.99.0995.
VALUE Cat.6 Surface Mount Wall Jack, unshielded, white: 25.99.8394;
VALUE Cat.6 19“ Patch Panel, 24 Ports, unshielded:
26.99.0362 (black); 26.99.0355 (lgrey)
VALUE Cat.6 UTP Patch Cord, grey, 5 m: 21.99.0905.

Our in-house laboratory has tested this cable-plug combination, in a Channel of 100 meters, in compliance with Class E specifications.

Length	grey	red	yellow	green	blue	black	white	– P.U.
0.5 m	21.99.0900	21.99.1521	21.99.1522	21.99.1523	21.99.1524	21.99.1525	21.99.1526	– 250
1 m	21.99.0901	21.99.1531	21.99.1532	21.99.1533	21.99.1534	21.99.1535	21.99.1536	– 200
1.5 m	21.99.0950	21.99.0951	21.99.0952	21.99.0953	21.99.0954	21.99.0955	21.99.0956	– 150
2 m	21.99.0902	21.99.1541	21.99.1542	21.99.1543	21.99.1544	21.99.1545	21.99.1546	– 150
3 m	21.99.0903	21.99.1551	21.99.1552	21.99.1553	21.99.1554	21.99.1555	21.99.1556	– 100
5 m	21.99.0905	21.99.1561	21.99.1562	21.99.1563	21.99.1564	21.99.1565	21.99.1566	– 70
7 m	21.99.0907	21.99.1571	21.99.1572	21.99.1573	21.99.1574	21.99.1575	21.99.1576	– 50
10 m	21.99.0910	21.99.1581	21.99.1582	21.99.1583	21.99.1584	21.99.1585	21.99.1586	– 40

VALUE UTP Cable Cat.6 / Cl. E, halogen-free

Cat.6 Class E | U/UTP

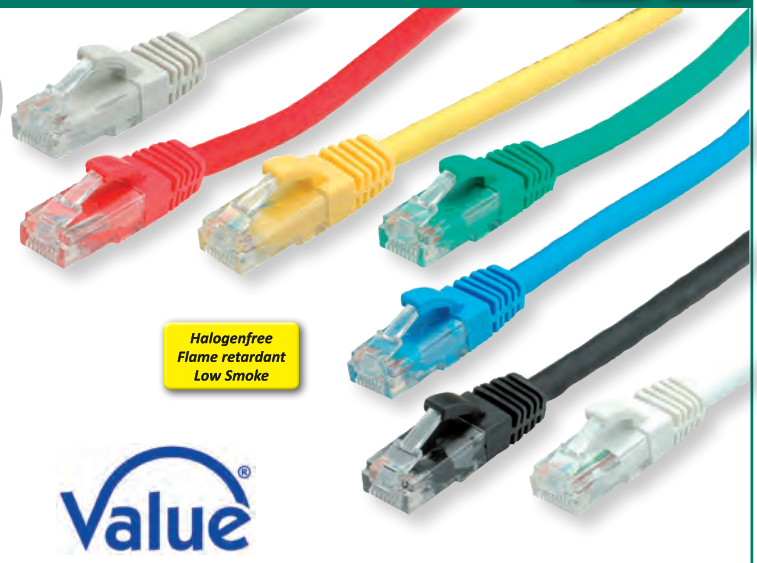

- Patch cable for networking connections between devices.
- Prepared unshielded Twisted Pair cable with RJ-45 connectors on both ends.
- Durable due to moulded kink protection.
- Flexible cable, suitable for narrow bending.
- High quality plugs with gold plated contacts.
- Contact settings 1:1, in accordance with the EIA/TIA 568 standard
- Construction: 4-pair stranded wire
- Halogen-free, flame retardant, low smoke.

For a structured halogen-free cabling system we recommend to use the following components:
ROLINE Cat.6 UTP Cable, Solid Wire, LSOH, 300 m: 21.15.1789
VALUE Cat.6 Surface Mount Wall Jack, unshielded, white: 25.99.8394
VALUE Cat.6 19“ Patch Panel, 24 Ports, unshielded:
26.99.0362 (black); 26.99.0355 (lgrey)
VALUE Cat.6 UTP Patch Cord, grey, LSOH: 21.99.0205

Our in-house laboratory has tested this cable-plug combination, in a Channel of 100 meters, in compliance with Class E specifications.

Length	grey	red	yellow	green	blue	black	white	– P.U.
0.5 m	21.99.0200	21.99.1021	21.99.1022	21.99.1023	21.99.1024	21.99.1025	21.99.1026	– 250
1 m	21.99.0201	21.99.1031	21.99.1032	21.99.1033	21.99.1034	21.99.1035	21.99.1036	– 200
1.5 m	21.99.0250	21.99.0251	21.99.0252	21.99.0253	21.99.0254	21.99.0255	21.99.0256	– 150
2 m	21.99.0202	21.99.1041	21.99.1042	21.99.1043	21.99.1044	21.99.1045	21.99.1046	– 150
3 m	21.99.0203	21.99.1051	21.99.1052	21.99.1053	21.99.1054	21.99.1055	21.99.1056	– 100
5 m	21.99.0205	21.99.1061	21.99.1062	21.99.1063	21.99.1064	21.99.1065	21.99.1066	– 70
7 m	21.99.0207	21.99.1071	21.99.1072	21.99.1073	21.99.1074	21.99.1075	21.99.1076	– 50
10 m	21.99.0210	21.99.1081	21.99.1082	21.99.1083	21.99.1084	21.99.1085	21.99.1086	– 40

ROLINE UTP Patch Cord, Cat.6 / Cl. E

Cat.6 Class E | U/UTP

- Patch cable for networking connections between devices.
  Prepared unshielded Twisted Pair cable with RJ-45 connectors on both ends.
- Durable due to moulded kink protection.
- Flexible cable, suitable for narrow bending.
- High quality plugs with gold plated contacts.
- Contact settings 1:1, in accordance with the EIA/TIA 568 standard.
- Construction: 4-pair stranded copper wire.



roline®
Designed for Professionals

Length	grey	red	yellow	green	blue	black	white	orange	– P.U.
0.3 m	21.15.1510	21.15.1511	21.15.1512	21.15.1513	21.15.1514	21.15.1515	21.15.1516	21.15.1517	– 50
0.5 m	21.15.0930	21.15.1521	21.15.1522	21.15.1523	21.15.1524	21.15.1525	21.15.1526	21.15.1527	– 100
1 m	21.15.0931	21.15.1531	21.15.1532	21.15.1533	21.15.1534	21.15.1535	21.15.1536	21.15.1537	– 100
1.5 m	21.15.0923	21.15.0924	21.15.0925	21.15.0926	21.15.0927	21.15.0928	21.15.0929	21.15.0921	– 100
2 m	21.15.0932	21.15.1541	21.15.1542	21.15.1543	21.15.1544	21.15.1545	21.15.1546	21.15.1547	– 100
3 m	21.15.0933	21.15.1551	21.15.1552	21.15.1553	21.15.1554	21.15.1555	21.15.1556	21.15.1557	– 50
5 m	21.15.0935	21.15.1561	21.15.1562	21.15.1563	21.15.1564	21.15.1565	21.15.1566	21.15.1567	– 50
7 m	21.15.0937	—	21.15.1572	21.15.1573	21.15.1574	—	—	—	– 50
10 m	21.15.0940	21.15.1581	—	21.15.1583	21.15.1584	—	—	—	– 40
15 m	21.15.0945	21.15.1591	—	21.15.1593	—	—	—	21.15.1597	– 30
20 m	21.15.0950	21.15.1601	21.15.1602	21.15.1603	—	—	—	21.15.1607	– 20

VALUE UTP Patch Cord, Cat.6 / Cl. E

Cat.6 Class E | U/UTP

- Prepared cable with unshielded RJ-45 plug on both ends
- Extra flat cable for special applications
- Durable cables thanks to kink protection
- Contact settings 1:1 in accordance with EIA/TIA 568, 8 lines
- Construction: internal line 8 wires
- Plug with gold plated contacts
- Colour: black



Value®

	Order-No.	– P.U.
VALUE UTP Patch Cord, Cat.6 / Cl. E, extra-flat, black, 0.5 m	21.99.0960	– 40
VALUE UTP Patch Cord, Cat.6 / Cl. E, extra-flat, black, 1.0 m	21.99.0961	– 40
VALUE UTP Patch Cord, Cat.6 / Cl. E, extra-flat, black, 1.5 m	21.99.0964	– 40
VALUE UTP Patch Cord, Cat.6 / Cl. E, extra-flat, black, 2.0 m	21.99.0962	– 40
VALUE UTP Patch Cord, Cat.6 / Cl. E, extra-flat, black, 3.0 m	21.99.0963	– 40
VALUE UTP Patch Cord, Cat.6 / Cl. E, extra-flat, black, 5.0 m	21.99.0965	– 40

VALUE FTP Patch Cord, Cat.6 / Cl. E

Cat.6 Class E | F/UTP

- Prepared cable with shielded RJ-45 plug on both ends
- Durable cables thanks to kink protection
- Extra flat cable for special applications
- Contact settings 1:1 in accordance with EIA/TIA 568, 8 lines
- Construction: internal line 8 wires,
  pairs shielded with aluminium clad foil
- Plug with gold plated contacts
- Colour: black



Value®

	Order-No.	– P.U.
VALUE FTP Patch Cord, Cat.6 / Cl. E, extra-flat, black, 0.5 m	21.99.0970	– 40
VALUE FTP Patch Cord, Cat.6 / Cl. E, extra-flat, black, 1.0 m	21.99.0971	– 40
VALUE FTP Patch Cord, Cat.6 / Cl. E, extra-flat, black, 1.5 m	21.99.0974	– 40
VALUE FTP Patch Cord, Cat.6 / Cl. E, extra-flat, black, 2.0 m	21.99.0972	– 40
VALUE FTP Patch Cord, Cat.6 / Cl. E, extra-flat, black, 3.0 m	21.99.0973	– 40
VALUE FTP Patch Cord, Cat.6 / Cl. E, extra-flat, black, 5.0 m	21.99.0975	– 40

VALUE S/FTP (PiMF) Patch Cord, Cat.6 / Cl. E

Cat.6 Class E | S/FTP

- Prepared shielded Twisted Pair cable with RJ-45 connectors on both sides. Used as patch cable in wiring cabinet or as direct connection cable between devices.
- Flexible cable suitable for narrow bending.
- Contact settings 1:1, according to EIA/TIA 568, 8 wires.
- Construction: 8 wires stranded copper wire, braid shield. Pairs shielded with aluminium clad polyester foil.
- Impedance: 100 Ohm

For a structured cabling system we recommend to use the following components:
ROLINE Cat.6 S/FTP Cable, Solid Wire, AWG23: 21.15.0890 (100 m), 21.15.0891 (300 m).
VALUE Cat.6 Surface Mount Wall Jack, shielded, white: 25.99.8392
VALUE Cat.6 19" Patch Panel, 24 Ports, shielded: 26.99.0353 (black), 26.99.0354 (grey).
VALUE Cat.6 S/FTP Patch Cord, grey, 5 m: 21.99.0805.

Our in-house laboratory has tested this cable-plug combination, in a Channel of 100 meters, in compliance with Class E specifications.



Length	grey	red	yellow	green	blue	black	white	– P.U.
0.5 m	21.99.0800	21.99.1321	21.99.1322	21.99.1323	21.99.1324	21.99.1325	21.99.1326	– 250
1 m	21.99.0801	21.99.1331	21.99.1332	21.99.1333	21.99.1334	21.99.1335	21.99.1336	– 200
1.5 m	21.99.0811	21.99.0812	21.99.0813	21.99.0814	21.99.0815	21.99.0816	21.99.0817	– 150
2 m	21.99.0802	21.99.1341	21.99.1342	21.99.1343	21.99.1344	21.99.1345	21.99.1346	– 150
3 m	21.99.0803	21.99.1351	21.99.1352	21.99.1353	21.99.1354	21.99.1355	21.99.1356	– 100
5 m	21.99.0805	21.99.1361	21.99.1362	21.99.1363	21.99.1364	21.99.1365	21.99.1366	– 70
7 m	21.99.0807	21.99.1371	21.99.1372	21.99.1373	21.99.1374	21.99.1375	21.99.1376	– 50
10 m	21.99.0810	21.99.1381	21.99.1382	21.99.1383	21.99.1384	21.99.1385	21.99.1386	– 40

VALUE S/FTP (PiMF) Patch Cord Cat.6 / Cl. E, halogen-free

Cat.6 Class E | S/FTP

- Prepared shielded Twisted Pair cable with RJ-45 connectors on both sides. Used as patch cable in wiring cabinet or as direct connection cable between devices.
- Flexible cable suitable for narrow bending.
- Contact settings 1:1, according to EIA/TIA 568, 8 wires.
- Construction: 8 wires stranded copper wire, braid shield. Pairs shielded with aluminium clad polyester foil.
- Impedance:100 Ohm.
- Cable jacketing: LSOH- Low Smoke Zero Halogen - cable emits limited smoke and no halogens when exposed to high sources of heat.

For a structured cabling system we recommend to use the following components:
ROLINE Cat.6 S/FTP Cable, Solid Wire, LSOH: 21.15.1889.
VALUE Cat.6 Surface Mount Wall Jack, shielded, white: 25.99.8392.
VALUE Cat.6 19" Patch Panel, 24 Ports, shielded: 26.99.0353 (black), 26.99.0354 (grey).
VALUE Cat.6 S/FTP Patch Cord, LSOH, grey, 5 m: 21.99.0705.

Our in-house laboratory has tested this cable-plug combination, in a Channel of 100 meters, in compliance with Class E specifications.

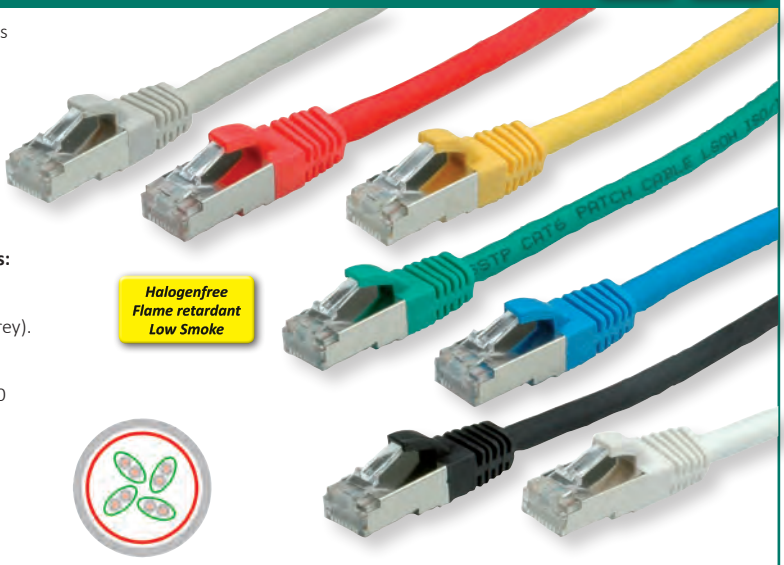

Length	grey	red	yellow	green	blue	black	white	– P.U.
0.5 m	21.99.0700	21.99.1221	21.99.1222	21.99.1223	21.99.1224	21.99.1225	21.99.1226	– 250
1 m	21.99.0701	21.99.1231	21.99.1232	21.99.1233	21.99.1234	21.99.1235	21.99.1236	– 200
1.5 m	21.99.0711	21.99.0712	21.99.0713	21.99.0714	21.99.0715	21.99.0716	21.99.0717	– 150
2 m	21.99.0702	21.99.1241	21.99.1242	21.99.1243	21.99.1244	21.99.1245	21.99.1246	– 150
3 m	21.99.0703	21.99.1251	21.99.1252	21.99.1253	21.99.1254	21.99.1255	21.99.1256	– 100
5 m	21.99.0705	21.99.1261	21.99.1262	21.99.1263	21.99.1264	21.99.1265	21.99.1266	– 70
7 m	21.99.0707	21.99.1271	21.99.1272	21.99.1273	21.99.1274	21.99.1275	21.99.1276	– 50
10 m	21.99.0710	21.99.1281	21.99.1282	21.99.1283	21.99.1284	21.99.1285	21.99.1286	– 40

ROLINE S/FTP (PiMF) Patch Cord, Cat.6 / Cl. E

Cat.6 Class E | S/FTP



- Patch cable for networking connections between devices. Prepared double shielded Twisted Pair cable with screened RJ-45 connectors on both ends.
- Durable due to moulded kink protection. Flexible cable, suitable for narrow bending.
- High quality plugs with gold plated contacts.
- Contact settings 1:1, in accordance with the EIA/TIA 568 standard.
- Construction: 4-pair stranded copper wire.
- Complete braid shielding. Pairs shielded with aluminium clad polyester foil.

For a structured cabling system we recommend to use the following components:
ROLINE Cat.6 S/FTP Cable, Solid Wire, AWG23: 21.15.0890 (100 m), 21.15.0891 (300 m);
ROLINE Cat.6 Surface Mount Wall Jack, shielded: 25.16.8392 (white);
ROLINE Cat.6 19" Patch Panel, 24 Ports, shielded: 26.11.0351 (light grey), 26.11.0361 (black);
ROLINE Cat.6 S/FTP Patch Cord, grey, 5 m: 21.15.0835.

The accredited German laboratory GHMT has tested and certified this product combination, in a Channel of 100 meters, as being compliant to Class E specifications; certificate no. z2364b-10-E.

roline® Designed for Professionals

Length	grey	red	yellow	green	blue	black	white	orange	– P.U.
0.3 m	21.15.1310	21.15.1311	21.15.1312	21.15.1313	21.15.1314	21.15.1315	21.15.1316	21.15.1317	– 50
0.5 m	21.15.0830	21.15.1321	21.15.1322	21.15.1323	21.15.1324	21.15.1325	21.15.1326	21.15.1327	– 100
1 m	21.15.0831	21.15.1331	21.15.1332	21.15.1333	21.15.1334	21.15.1335	21.15.1336	21.15.1337	– 100
1.5 m	21.15.0823	21.15.0824	21.15.0825	21.15.0826	21.15.0827	21.15.0828	21.15.0829	21.15.0821	– 100
2 m	21.15.0832	21.15.1341	21.15.1342	21.15.1343	21.15.1344	21.15.1345	21.15.1346	21.15.1347	– 100
3 m	21.15.0833	21.15.1351	21.15.1352	21.15.1353	21.15.1354	21.15.1355	21.15.1356	21.15.1357	– 50
5 m	21.15.0835	21.15.1361	21.15.1362	21.15.1363	21.15.1364	21.15.1365	21.15.1366	21.15.1367	– 50
7 m	21.15.0837	21.15.1371	21.15.1372	21.15.1373	21.15.1374	21.15.1375	21.15.1376	21.15.1377	– 50
10 m	21.15.0840	21.15.1381	21.15.1382	21.15.1383	21.15.1384	21.15.1385	21.15.1386	21.15.1387	– 40
15 m	21.15.0845	21.15.1391	21.15.1392	21.15.1393	21.15.1394	21.15.1395	21.15.1396	21.15.1397	– 30
20 m	21.15.0850	21.15.1401	21.15.1402	21.15.1403	21.15.1404	21.15.1405	21.15.1406	21.15.1407	– 20

VALUE UTP Patch Cord Cat.6A / Cl. EA

Cat.6A Class EA | U/UTP

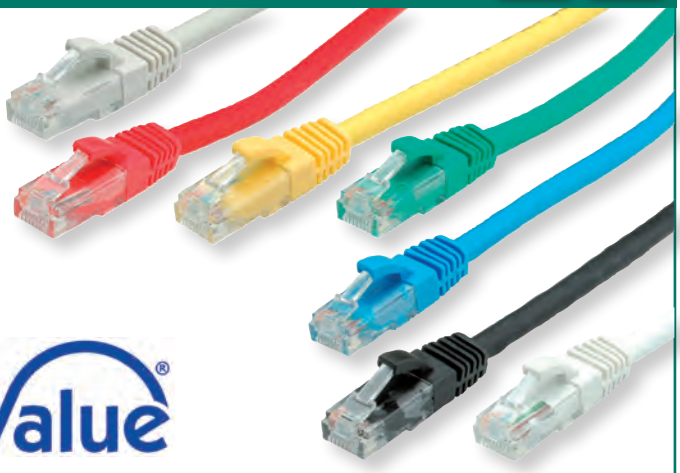

- The cheap solution for data transfer rates of up to 10 Gbit/s and a bandwidth of 500 MHz
- Patch cable for networking connections between devices
- Prepared shielded Twisted Pair cable (PiMF) with RJ-45 connectors on both ends.
- Durable due to moulded kink protection.
- Flexible cable, suitable for narrow bending.
- Impedance: 100 Ohm
- Contact settings 1:1, in accordance with the EIA/TIA 568 standard.
- Construction: 8 lines, pairs shielded with aluminium foil, complete shielding in tinned copper braid

For a structured shielded Cat.6A cabling system we recommend to use the following components:
VALUE Cat.6A UTP Cable, Solid Wire, 300 m: 21.99.1685
Flush Mount Wall Jack for Keystones: 25.16.8579
Surface Wall Mount Frame: 25.16.8484
VALUE Cat.6A Keystone, RJ-45, shielded: 26.99.0366
19" Keystone Patch Panel: 26.11.0358 / 26.11.0359
VALUE Cat.6A S/FTP Patch Cord, 5 m: 21.99.0875

Value®

Length	grey	red	yellow	green	blue	black	white	– P.U.
0.3 m	21.99.0874	21.99.1424	21.99.1434	21.99.1444	21.99.1454	21.99.1464	21.99.1474	– 100
0.5 m	21.99.0870	21.99.1420	21.99.1430	21.99.1440	21.99.1450	21.99.1460	21.99.1470	– 100
1 m	21.99.0871	21.99.1421	21.99.1431	21.99.1441	21.99.1451	21.99.1461	21.99.1471	– 100
1.5 m	21.99.1480	21.99.1481	21.99.1482	21.99.1483	21.99.1484	21.99.1485	21.99.1486	– 100
2 m	21.99.0872	21.99.1422	21.99.1432	21.99.1442	21.99.1452	21.99.1462	21.99.1472	– 100
3 m	21.99.0873	21.99.1423	21.99.1433	21.99.1443	21.99.1453	21.99.1463	21.99.1473	– 50
5 m	21.99.0875	21.99.1425	21.99.1435	21.99.1445	21.99.1455	21.99.1465	21.99.1475	– 50
7 m	21.99.0876	21.99.1426	21.99.1436	21.99.1446	21.99.1456	21.99.1466	21.99.1476	– 40
10 m	21.99.0877	21.99.1427	21.99.1437	21.99.1447	21.99.1457	21.99.1467	21.99.1477	– 40
15 m	21.99.0878	21.99.1428	21.99.1438	21.99.1448	21.99.1458	21.99.1468	21.99.1478	– 30
20 m	21.99.0879	21.99.1429	21.99.1439	21.99.1449	21.99.1459	21.99.1469	21.99.1479	– 20

VALUE S/FTP (PiMF) Patch Cord Cat.6A / Cl. EA

Cat.6A Class EA | S/FTP

The cheap solution for data transfer rates of up to 10 Gbit/s and a bandwidth of 500 MHz. Patch cable for networking connections between devices.

- Prepared shielded Twisted Pair cable (PiMF) with RJ-45 connectors on both ends.
- Durable due to moulded kink protection. Flexible cable, suitable for narrow bending.
- Impedance: 100 Ohm. Contact settings 1:1, in accordance with the EIA/TIA 568 standard.
- Construction: 8 lines, pairs shielded with aluminium foil, complete braided shielding.

For a structured shielded Cat.6A cabling system we recommend to use the following components:
VALUE Cat.6A S/FTP Cable, Solid Wire, 100 m: 21.99.0881.
Flush Mount Wall Jack for Keystones: 25.16.8579.
Surface Wall Mount Frame: 25.16.8484.
VALUE Cat.6A Keystone, RJ-45, shielded: 26.99.0366.
19“ Keystone Patch Panel: 26.11.0359.
VALUE Cat.6A S/FTP Patch Cord, 5 m: 21.99.0865.



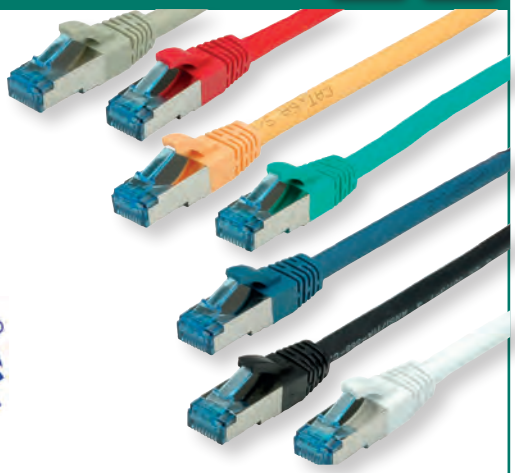

Length	grey	red	yellow	green	blue	black	white	– P.U.
0.3 m	21.99.0864	21.99.1924	21.99.1934	21.99.1944	21.99.1954	21.99.1964	21.99.1974	– 100
0.5 m	21.99.0860	21.99.1920	21.99.1930	21.99.1940	21.99.1950	21.99.1960	21.99.1970	– 100
1 m	21.99.0861	21.99.1921	21.99.1931	21.99.1941	21.99.1951	21.99.1961	21.99.1971	– 100
1.5 m	21.99.1990	21.99.1991	21.99.1992	21.99.1993	21.99.1994	21.99.1995	21.99.1996	– 100
2 m	21.99.0862	21.99.1922	21.99.1932	21.99.1942	21.99.1952	21.99.1962	21.99.1972	– 100
3 m	21.99.0863	21.99.1923	21.99.1933	21.99.1943	21.99.1953	21.99.1963	21.99.1973	– 50
5 m	21.99.0865	21.99.1925	21.99.1935	21.99.1945	21.99.1955	21.99.1965	21.99.1975	– 50
7 m	21.99.0866	21.99.1926	21.99.1936	21.99.1946	21.99.1956	21.99.1966	21.99.1976	– 40
10 m	21.99.0867	21.99.1927	21.99.1937	21.99.1947	21.99.1957	21.99.1967	21.99.1977	– 40
15 m	21.99.0868	21.99.1928	21.99.1938	21.99.1948	21.99.1958	21.99.1968	21.99.1978	– 30
20 m	21.99.0869	21.99.1929	21.99.1939	21.99.1949	21.99.1959	21.99.1969	21.99.1979	– 20

VALUE UTP Patch Cord, Cat.6A / Cl. EA

Cat.6A Class EA | U/UTP

- Prepared cable with unshielded RJ-45 plug on both ends
- Extra flat cable for special applications
- Durable cables thanks to kink protection
- Contact settings 1:1 in accordance with EIA/TIA 568, 8 lines
- Construction: internal line 8 wires
- Plug with gold plated contacts
- Colour: black

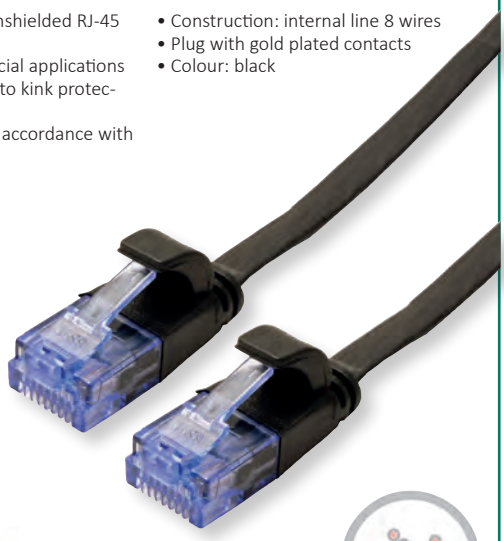



	Order-No. – P.U.
VALUE UTP Patch Cord, Cat.6A / Cl. EA, black, 0.5 m, extra-flat	21.99.0820 – 40
VALUE UTP Patch Cord, Cat.6A / Cl. EA, black, 1.0 m, extra-flat	21.99.0821 – 40
VALUE UTP Patch Cord, Cat.6A / Cl. EA, black, 1.5 m, extra-flat	21.99.0824 – 40
VALUE UTP Patch Cord, Cat.6A / Cl. EA, black, 2.0 m, extra-flat	21.99.0822 – 40
VALUE UTP Patch Cord, Cat.6A / Cl. EA, black, 3.0 m, extra-flat	21.99.0823 – 40
VALUE UTP Patch Cord, Cat.6A / Cl. EA, black, 5.0 m, extra-flat	21.99.0825 – 40

VALUE FTP Patch Cord, Cat.6A / Cl. EA

Cat.6A Class EA | F/UTP

- Prepared cable with shielded RJ-45 plug on both ends
- Durable cables thanks to kink protection
- Extra flat cable for special applications
- Contact settings 1:1 in accordance with EIA/TIA 568, 8 lines
- Construction: internal line 8 wires, pairs shielded with aluminium clad foil
- Plug with gold plated contacts
- Colour: black





	Order-No. – P.U.
VALUE FTP Patch Cord, Cat.6A / Cl. EA, black, 0.5 m, extra-flat	21.99.0830 – 40
VALUE FTP Patch Cord, Cat.6A / Cl. EA, black, 1.0 m, extra-flat	21.99.0831 – 40
VALUE FTP Patch Cord, Cat.6A / Cl. EA, black, 1.5 m, extra-flat	21.99.0834 – 40
VALUE FTP Patch Cord, Cat.6A / Cl. EA, black, 2.0 m, extra-flat	21.99.0832 – 40
VALUE FTP Patch Cord, Cat.6A / Cl. EA, black, 3.0 m, extra-flat	21.99.0833 – 40
VALUE FTP Patch Cord, Cat.6A / Cl. EA, black, 5.0 m, extra-flat	21.99.0835 – 40

ROLINE UTP Patch Cord Cat.6A / Cl. EA, Slim, Colored

Cat.6A Class EA | U/UTP

- Patch cable for networking connections between devices.
- Prepared unshielded Twisted Pair cable with RJ-45 connectors on both ends.
- Durable due to moulded kink protection.
- **Slim, flexible cable, suitable for narrow bending.**
- Contact settings 1:1, in accordance with the EIA/TIA 568 standard.
- Construction: 4-pair stranded copper wire.

roline® Designed for Professionals

Halogenfree Flame retardant Low Smoke





Length	grey	red	yellow	green	blue	black	white	– P.U.
0.15 m	21.15.3900	21.15.3910	21.15.3920	21.15.3930	21.15.3940	21.15.3950	21.15.0978	– 100
0.3 m	21.15.3901	21.15.3911	21.15.3921	21.15.3931	21.15.3941	21.15.3951	21.15.0979	– 100
0.5 m	21.15.3902	21.15.3912	21.15.3922	21.15.3932	21.15.3942	21.15.3952	21.15.0980	– 100
1 m	21.15.3903	21.15.3913	21.15.3923	21.15.3933	21.15.3943	21.15.3953	21.15.0981	– 100
1.5 m	21.15.3904	21.15.3914	21.15.3924	21.15.3934	21.15.3944	21.15.3954	21.15.0984	– 100
2 m	21.15.3905	21.15.3915	21.15.3925	21.15.3935	21.15.3945	21.15.3955	21.15.0982	– 100
3 m	21.15.3906	21.15.3916	21.15.3926	21.15.3936	21.15.3946	21.15.3956	21.15.0983	– 50
5 m	21.15.3907	21.15.3917	21.15.3927	21.15.3937	21.15.3947	21.15.3957	21.15.0985	– 50

ROLINE U/FTP DataCenter Patch Cord Cat.6A / LSOH, Slim

Cat.6A Class EA | U/FTP

Category 6A twisted-pair patch cable with RJ45 connectors on both sides. Particularly thin and flexible cable with individual pairs of wires in aluminium laminated foil for use in confined spaces, such as in data centres.

Halogenfree Flame retardant Low Smoke



- Durable thanks to moulded-on kink protection
- Suitable as patch cable in patch panels or as device connection cable and intended for use in the LAN
- Contact assignment: 1:1 according to EIA/TIA568, 8 cores
- Structure: 8 cores stranded wire

	Order-No. – P.U.
ROLINE U/FTP DataCenter Patch Cord Cat.6A / Cl. EA, LSOH, slim, 0.5 m	21.15.1700 – 100
ROLINE U/FTP DataCenter Patch Cord Cat.6A / Cl. EA, LSOH, slim, 1.0 m	21.15.1701 – 100
ROLINE U/FTP DataCenter Patch Cord Cat.6A / Cl. EA, LSOH, slim, 1.5 m	21.15.1704 – 100
ROLINE U/FTP DataCenter Patch Cord Cat.6A / Cl. EA, LSOH, slim, 2.0 m	21.15.1702 – 100
ROLINE U/FTP DataCenter Patch Cord Cat.6A / Cl. EA, LSOH, slim, 3.0 m	21.15.1703 – 50
ROLINE U/FTP DataCenter Patch Cord Cat.6A / Cl. EA, LSOH, slim, 5.0 m	21.15.1705 – 50

ROLINE U/FTP Data Centrer Cable Cat.7 / Cl. F, with RJ45 Plug, 500 MHz, LSOH, Slim

Cat.7 Class F | U/FTP

Category 7 twisted-pair cable with RJ45 (500MHz) connectors on both sides. Particularly thin and flexible cable with individual pairs of wires in aluminium-laminated foil for use in confined spaces, such as in data centres.

Halogenfree Flame retardant Low Smoke



- Durable cable thanks to moulded-on bend protection
- Suitable as a cable in patch panels or as device connection cable and intended for use in the LAN
- Contact assignment: 1:1 according to EIA/TIA568, 8 cores
- Structure: 8 cores stranded wire

	Order-No. – P.U.
ROLINE U/FTP Data Centrer Cable Cat.7, with RJ45 Plug, 500 MHz, LSOH, slim, 0.5 m	21.15.1710 – 100
ROLINE U/FTP Data Centrer Cable Cat.7, with RJ45 Plug, 500 MHz, LSOH, slim, 1.0 m	21.15.1711 – 100
ROLINE U/FTP Data Centrer Cable Cat.7, with RJ45 Plug, 500 MHz, LSOH, slim, 1.5 m	21.15.1714 – 100
ROLINE U/FTP Data Centrer Cable Cat.7, with RJ45 Plug, 500 MHz, LSOH, slim, 2.0 m	21.15.1712 – 100
ROLINE U/FTP Data Centrer Cable Cat.7, with RJ45 Plug, 500 MHz, LSOH, slim, 3.0 m	21.15.1713 – 50
ROLINE U/FTP Data Centrer Cable Cat.7, with RJ45 Plug, 500 MHz, LSOH, slim, 5.0 m	21.15.1715 – 50

ROLINE RJ45 Network Cable Drum Cat.6A / Cl. EA, S/FTP, 60 m (1 roll)

Cat.6A Class EA | S/FTP

Network cable reel to extend Ethernet links for temporary cable installations at events, trade fair, conferences...

Simply unroll the cable and connect patch cables and network devices.

- LAN extension up to 60m
- With Cat.7 S/FTP-PiMF 1000 MHz installation cable on the reel
- Integrated data socket Cat.6A 1x RJ45 socket with dust protection cap
- Cat. 6A Keystone RJ45 socket at the end of cable
- Impedance: 100 Ohm
- Construction:
  - 8 lines, solid copper wire, AWG26
  - pairs shielded with aluminium foil
  - complete shielding in tinned copper braid
- Colour: orange
- Dimensions drum with handle: 355 x 420 x 240 mm

roline® Designed for Professionals

NOTE: only 1 (one) drum (with 60m) is delivered.



	Order-No. – P.U.
ROLINE RJ45 Network Cable Drum Cat.6A / Cl. EA, S/FTP, 60 m (1 roll)	21.15.0007 – 1

VALUE S/FTP Patch Cord Cat.6A / Cl. EA, Solid

Cat.6A Class EA | S/FTP

Patch cable for networking connections between devices
- Prepared double shielded Twisted Pair cable with screened RJ-45 connectors on both ends
- Durable due to moulded kink protection

• Suitable for PoE applications and multimedia applications were the extension is working over TP

- High quality plugs with gold plated contacts
- Contact settings 1:1, in accordance with the EIA/TIA 568 standard
- Construction: 4-pair solid copper wire, complete braid shielding, pairs shielded with aluminium clad polyester foil



	Order-No. – P.U.
VALUE S/FTP Patch Cord Cat.6A / Cl. EA, solid, LSOH, grey, 20.0 m	21.99.0844 – 5
VALUE S/FTP Patch Cord Cat.6A / Cl. EA, solid, LSOH, grey, 30.0 m	21.99.0846 – 5
VALUE S/FTP Patch Cord Cat.6A / Cl. EA, solid, LSOH, grey, 50.0 m	21.99.0847 – 2
VALUE S/FTP Patch Cord Cat.6A / Cl. EA, solid, LSOH, grey, 70.0 m	21.99.0848 – 2
VALUE S/FTP Patch Cord Cat.6A / Cl. EA, solid, LSOH, grey, 90.0 m	21.99.0849 – 2

Halogenfree Flame retardant Low Smoke

ROLINE S/FTP Patch Cord Cat.6A / Cl. EA, Solid

Cat.6A Class EA | S/FTP

Patch cable for networking connections between devices
- Prepared double shielded Twisted Pair cable with screened RJ-45 connectors on both ends
- Durable due to moulded kink protection

• Suitable for PoE applications and multimedia applications were the extension is working over TP

- High quality plugs with gold plated contacts
- Contact settings 1:1, in accordance with the EIA/TIA 568 standard
- Construction: 4-pair solid copper wire, complete braid shielding, pairs shielded with aluminium clad polyester foil



	Order-No. – P.U.
ROLINE S/FTP Patch Cord Cat.6A / Cl. EA, solid, grey, 20.0 m	21.15.0870 – 5
ROLINE S/FTP Patch Cord Cat.6A / Cl. EA, solid, grey, 30.0 m	21.15.0871 – 5
ROLINE S/FTP Patch Cord Cat.6A / Cl. EA, solid, grey, 50.0 m	21.15.0872 – 2
ROLINE S/FTP Patch Cord Cat.6A / Cl. EA, solid, grey, 70.0 m	21.15.0873 – 2
ROLINE S/FTP Patch Cord Cat.6A / Cl. EA, solid, grey, 90.0 m	21.15.0875 – 2
ROLINE S/FTP Patch Cord Cat.6A / Cl. EA, solid, *LSOH, grey, 20.0 m	21.15.0874 – 5
ROLINE S/FTP Patch Cord Cat.6A / Cl. EA, solid, *LSOH, grey, 30.0 m	21.15.0876 – 5
ROLINE S/FTP Patch Cord Cat.6A / Cl. EA, solid, *LSOH, grey, 50.0 m	21.15.0877 – 2
ROLINE S/FTP Patch Cord Cat.6A / Cl. EA, solid, *LSOH, grey, 70.0 m	21.15.0878 – 2
ROLINE S/FTP Patch Cord Cat.6A / Cl. EA, solid, *LSOH, grey, 90.0 m	21.15.0879 – 2

Designed for Professionals

* Halogenfree Flame retardant Low Smoke

COMPONENT LEVEL Patch Cords - Considerations

100% Component Level Tested | Cat.6 | Cat.6A | U/UTP | S/FTP

As streaming media applications such as video and multimedia become commonplace, the demands for faster data rates will increase and spawn new applications that will benefit from the higher bandwidth offered by Category 6 or 6A.

When it comes to structured cabling performance, the objectives of a standard are both to ensure the performance of present, foreseen and perhaps unforeseen applications, and to allow interoperability of components from multiple manufacturers that make up a structured cabling system.

When a structured cabling system has components from different manufacturers, the overall performance margin can drop, due to the need to work with connectivity that may be anywhere in the performance envelope defined by the standard for a channel or permanent link.

COMPONENT LEVEL Patch Cords - Considerations

When a new cabling system is installed, the installed cabling becomes a permanent infrastructure in the building. The cable itself is routed though hidden pathways within walls, under floors and in ceilings or in cable trays and conduit. Upon completion of the installation, each permanent link is certified from the termination in a patch panel to the outlet or jack in the work area or office at the other end.

Nevertheless the quality and performance of connecting hardware as patch cords have a tremendous impact on the performance of a cabling channel. The patch cords are after all the first component in the channel in either direction.

ROLINE Category 6 / 6A Component LEVEL cords are 100% transmission tested to component level performance as specified in TIA/EIA-568-B.2-1.

- They are assembled in a controlled environment using advanced manufacturing techniques to insure consistent quality.
- These patch cords have been tested on **COMPONENT LEVEL.** This means, you can add them to ANY Permanent Link that fulfils Cat.6 / Cat.6A and the resulting Channel will also fulfil Cat.6 / Cat.6A.

Even more, combining any components (patch cords, jacks, patchpanels, wall boxes) that are tested on **COMPONENT LEVEL**, will result in a Channel that fulfills the norm.

ROLINE Category 6 / 6A Component LEVEL patch cords have a
- protection of the plug latch,- durable cable strain relief,
Are flexible,
- LSOH (flame retardant, low smoke and halogen free)
- and last but not least they are compatible with both T568A and T568B cabling systems.

These patch cords are designed for greater flexibility and service life and are available in eight colors (grey / red / yellow / green / blue / black / white / orange) and in eleven standard lengths.
Please see therefore the next following pages.

Key Features:
- Transmission performance TIA/EIA 568-B.2-1 Component, permanent link, and channel level
- 100% factory transmission tested to Component Level per TIA/EIA 568-B.2-1
- T568A/B Wiring Scheme
- Durable flexible cable strain relief
- Maximum strength and durability construction

Halogenfree Flame retardant Low Smoke

ROLINE UTP Cable Cat.6 Component Level, LSOH

100% Component Level Tested | Cat.6 | U/UTP

- Patch cable for networking connections between devices.
- Prepared unshielded Twisted Pair cable with RJ-45 connectors on both ends.
- Durable due to moulded kink protection.
- Flexible cable, suitable for narrow bending.
- High quality plugs with gold plated contacts.
- Contact settings 1:1, in accordance with the EIA/TIA 568 standard.
- Construction: 4-pair stranded copper wire.
- Halogen-free, flame retardant, low smoke.
- 100 % Component level testing

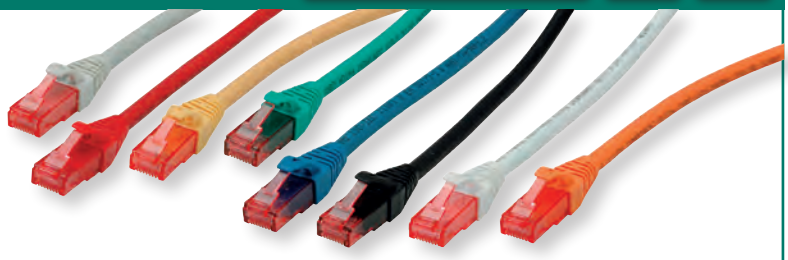

roline®
Designed for Professionals





Halogenfree
Flame retardant
Low Smoke

Length	grey	red	yellow	green	blue	black	white	orange	P.U.
0.3m	21.15.2940	21.15.2941	21.15.2942	21.15.2943	21.15.2944	21.15.2945	21.15.2946	21.15.2947	– 50
0.5m	21.15.2500	21.15.2510	21.15.2520	21.15.2530	21.15.2540	21.15.2550	21.15.2560	21.15.2570	– 100
1 m	21.15.2501	21.15.2511	21.15.2521	21.15.2531	21.15.2541	21.15.2551	21.15.2561	21.15.2571	– 100
1.5 m	21.15.2504	21.15.2514	21.15.2524	21.15.2534	21.15.2544	21.15.2554	21.15.2564	21.15.2574	– 100
2 m	21.15.2502	21.15.2512	21.15.2522	21.15.2532	21.15.2542	21.15.2552	21.15.2562	21.15.2572	– 100
3 m	21.15.2503	21.15.2513	21.15.2523	21.15.2533	21.15.2543	21.15.2553	21.15.2563	21.15.2573	– 50
5 m	21.15.2505	21.15.2515	21.15.2525	21.15.2535	21.15.2545	21.15.2555	21.15.2565	21.15.2575	– 50
7.5m	21.15.2506	—	—	—	—	—	—	—	– 40
10 m	21.15.2507	—	—	—	—	—	—	—	– 40
15 m	21.15.2508	—	—	—	—	—	—	—	– 30
20 m	21.15.2509	—	—	—	—	—	—	—	– 20

ROLINE S/FTP (PiMF) Patch Cord Cat.6 Component Level, LSOH

100% Component Level Tested | Cat.6 | S/FTP

- Patch cable for networking connections between devices.
- Prepared double shielded Twisted Pair cable with screened RJ-45 connectors on both ends.
- Durable due to moulded kink protection
- Flexible cable, suitable for narrow bending.
- High quality plugs with gold plated contacts.
- Contact settings 1:1, in accordance with the EIA/TIA 568 standard.
- Construction: 4-pair stranded copper wire. Complete braid shielding.
- Pairs shielded with aluminium clad polyester foil.
- Halogen-free, flame retardant, low smoke.
- 100% Component Level testing

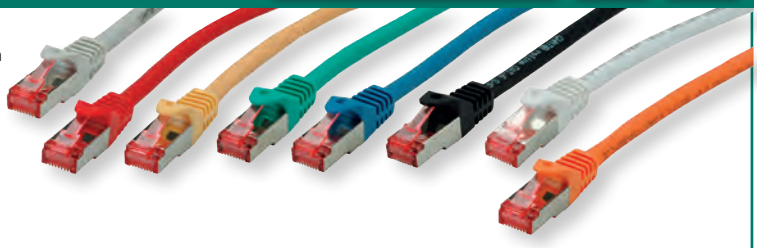

roline®
Designed for Professionals





Halogenfree
Flame retardant
Low Smoke

Length	grey	red	yellow	green	blue	black	white	orange	P.U.
0.3m	21.15.2951	21.15.2952	21.15.2953	21.15.2954	21.15.2955	21.15.2956	21.15.2957	21.15.2958	– 50
0.5m	21.15.2600	21.15.2610	21.15.2620	21.15.2630	21.15.2640	21.15.2650	21.15.2660	21.15.2670	– 100
1 m	21.15.2601	21.15.2611	21.15.2621	21.15.2631	21.15.2641	21.15.2651	21.15.2661	21.15.2671	– 100
1.5 m	21.15.2604	21.15.2614	21.15.2624	21.15.2634	21.15.2644	21.15.2654	21.15.2664	21.15.2674	– 100
2 m	21.15.2602	21.15.2612	21.15.2622	21.15.2632	21.15.2642	21.15.2652	21.15.2662	21.15.2672	– 100
3 m	21.15.2603	21.15.2613	21.15.2623	21.15.2633	21.15.2643	21.15.2653	21.15.2663	21.15.2673	– 50
5 m	21.15.2605	21.15.2615	21.15.2625	21.15.2635	21.15.2645	21.15.2655	21.15.2665	21.15.2675	– 50
7.5m	21.15.2606	—	—	—	—	—	—	—	– 40
10 m	21.15.2607	—	—	—	—	—	—	—	– 40
15 m	21.15.2608	—	—	—	—	—	—	—	– 30
20 m	21.15.2609	—	—	—	—	—	—	—	– 20

ROLINE UTP Patch Cord Cat.6A, Component Level, LSOH

100% Component Level Tested | Cat.6A | U/UTP

- Patch cable for networking connections between devices.
- Prepared unshielded Twisted Pair cable with RJ-45 connectors on both ends.
- Durable due to moulded kink protection.
- Flexible cable, suitable for narrow bending.
- High quality plugs with gold plated contacts.
- Contact settings 1:1, in accordance with the EIA/TIA 568 standard.
- Construction: 4-pair stranded copper wire.
- Halogen-free, flame retardant, low smoke.
- 100 % Component level testing



roline®
Designed for Professionals





Halogenfree
Flame retardant
Low Smoke

Length	grey	red	yellow	green	blue	black	white	orange	P.U.
0.3m	21.15.2981	21.15.2982	21.15.2983	21.15.2984	21.15.2985	21.15.2986	21.15.2987	21.15.2988	– 50
0.5m	21.15.2700	21.15.2710	21.15.2720	21.15.2730	21.15.2740	21.15.2750	21.15.2760	21.15.2770	– 100
1m	21.15.2701	21.15.2711	21.15.2721	21.15.2731	21.15.2741	21.15.2751	21.15.2761	21.15.2771	– 100
1.5m	21.15.2704	21.15.2714	21.15.2724	21.15.2734	21.15.2744	21.15.2754	21.15.2764	21.15.2774	– 100
2m	21.15.2702	21.15.2712	21.15.2722	21.15.2732	21.15.2742	21.15.2752	21.15.2762	21.15.2772	– 100
3m	21.15.2703	21.15.2713	21.15.2723	21.15.2733	21.15.2743	21.15.2753	21.15.2763	21.15.2773	– 50
5m	21.15.2705	21.15.2715	21.15.2725	21.15.2735	21.15.2745	21.15.2755	21.15.2765	21.15.2775	– 50
7.5m	21.15.2706	21.15.2716	21.15.2726	21.15.2736	21.15.2746	21.15.2756	21.15.2766	21.15.2776	– 40
10m	21.15.2707	21.15.2717	21.15.2727	21.15.2737	21.15.2747	21.15.2757	21.15.2767	21.15.2777	– 40
15m	21.15.2708	21.15.2718	21.15.2728	21.15.2738	21.15.2748	21.15.2758	21.15.2768	21.15.2778	– 30
20m	21.15.2709	21.15.2719	21.15.2729	21.15.2739	21.15.2749	21.15.2759	21.15.2769	21.15.2779	– 20

ROLINE S/FTP (PiMF) Patch Cord Cat.6A, Component Level, LSOH

100% Component Level Tested | Cat.6A | S/FTP

- Patch cable for networking connections between devices.
- Prepared double shielded Twisted Pair cable with screened RJ-45 connectors on both ends.
- Durable due to moulded kink protection.
- Flexible cable, suitable for narrow bending.
- High quality plugs with gold plated contacts.
- Contact settings 1:1, in accordance with the EIA/TIA 568 standard.
- Construction: 4-pair stranded copper wire. Complete braid shielding.
- Pairs shielded with aluminium clad polyester foil.
- Halogen-free, flame retardant, low smoke.
- 100 % Component level testing

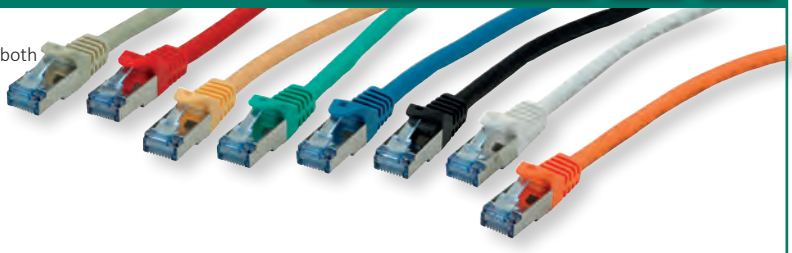

roline®
Designed for Professionals





Halogenfree
Flame retardant
Low Smoke



Length	grey	red	yellow	green	blue	black	white	orange	P.U.
0.3m	21.15.2970	21.15.2971	21.15.2972	21.15.2973	21.15.2974	21.15.2975	21.15.2976		– 50
0.5m	21.15.2800	21.15.2810	21.15.2820	21.15.2830	21.15.2840	21.15.2850	21.15.2860	%	– 100
1m	21.15.2801	21.15.2811	21.15.2821	21.15.2831	21.15.2841	21.15.2851	21.15.2861		– 100
1.5m	21.15.2804	21.15.2814	21.15.2824	21.15.2834	21.15.2844	21.15.2854	21.15.2864	21.15.2874	– 100
2m	21.15.2802	21.15.2812	21.15.2822	21.15.2832	21.15.2842	21.15.2852	21.15.2862	21.15.2872	– 100
3m	21.15.2803	21.15.2813	21.15.2823	21.15.2833	21.15.2843	21.15.2853	21.15.2863	21.15.2873	– 50
5m	21.15.2805	21.15.2815	21.15.2825	21.15.2835	21.15.2845	21.15.2855	21.15.2865	21.15.2875	– 50
7.5m	21.15.2806	21.15.2816	21.15.2826	21.15.2836	21.15.2846	21.15.2856	21.15.2866	21.15.2876	– 40
10m	21.15.2807	21.15.2817	21.15.2827	21.15.2837	21.15.2847	21.15.2857	21.15.2867		– 40
15m	21.15.2808	21.15.2818	21.15.2828	21.15.2838	21.15.2848	21.15.2858	21.15.2868	21.15.2878	– 30
20m	21.15.2809	21.15.2819	21.15.2829	21.15.2839	21.15.2849	21.15.2859	21.15.2869		– 20

VALUE S/FTP Cable (Cat.7 / Cl. F), with RJ-45 connectors (500 MHz)

Cat.7 Class F | S/FTP

- The cheap solution for data transfer rates of up to 10 Gbit/s and a bandwidth of 500 MHz; up to 40Gbit/s for Cat.7 (cable material is able to transfer category 7- 600 MHz).
- Patch cable for networking connections between devices. Prepared shielded Twisted Pair cable (PiMF) with RJ-45 connectors on both ends.
- Durable due to moulded kink protection.
- Flexible cable, suitable for narrow bending.
- Impedance: 100 Ohm.
- Contact settings 1:1, in accordance with the EIA/TIA 568 standard.
- Construction: 8 lines, pairs shielded with aluminium foil, complete braided shielding.





	Order-No.	P.U.
VALUE S/FTP Cable (Cat.7), with RJ-45 connectors (500 MHz), grey, 0.5 m	21.99.0850	100
VALUE S/FTP Cable (Cat.7), with RJ-45 connectors (500 MHz), grey, 1.0 m	21.99.0851	100
VALUE S/FTP Cable (Cat.7), with RJ-45 connectors (500 MHz), grey, 2.0 m	21.99.0852	100
VALUE S/FTP Cable (Cat.7), with RJ-45 connectors (500 MHz), grey, 3.0 m	21.99.0853	50
VALUE S/FTP Cable (Cat.7), with RJ-45 connectors (500 MHz), grey, 5.0 m	21.99.0855	50

Value®

ROLINE S/FTP Cable (Cat.7 / Cl. F), with RJ-45 connectors (500 MHz), LSOH

Cat.7 Class F | S/FTP

- The cheap solution for data transfer rates of up to 10 Gbit/s for Cat.6a bandwidth of 500 MHz; up to 40 Gbit/s for Cat.7 (cable material is able to transfer Category 7- 600 MHz)
- Patch cord for networking connections between devices
- Prepared shielded Twisted Pair cable (PiMF) with RJ-45 connectors on both ends
- Durable due to moulded kink protection
- Flexible cable, suitable for narrow bending
- Impedance: 100 Ohm
- Colour: grey
- Contact settings 1:1, in accordance with the EIA/TIA 568 standard
- Construction: 8 lines + pairs shielded with aluminium foil, complete shielding in tinned copper braid





	Order-No.	P.U.
ROLINE S/FTP Cable (Cat.7), with RJ-45 connectors (500 MHz), LSOH, grey, 0.5 m	21.15.0854	100
ROLINE S/FTP Cable (Cat.7), with RJ-45 connectors (500 MHz), LSOH, grey, 1.0 m	21.15.0851	100
ROLINE S/FTP Cable (Cat.7), with RJ-45 connectors (500 MHz), LSOH, grey, 2.0 m	21.15.0852	100
ROLINE S/FTP Cable (Cat.7), with RJ-45 connectors (500 MHz), LSOH, grey, 3.0 m	21.15.0853	50
ROLINE S/FTP Cable (Cat.7), with RJ-45 connectors (500 MHz), LSOH, grey, 5.0 m	21.15.0855	50

roline®
Designed for Professionals

Halogenfree
Flame retardant
Low Smoke

ROLINE Lockable RJ45 Plug with Key

- Provides a cost effective solution to secure an exposed network jack by restricting access from an unauthorized user with an endpoint device like network switch, router and server
- For blocking unused ports on a switch to prevent unauthorized access
- To prevent damage of an upgrade port on a wide range of devices
- Snaps securely into any industry-standard RJ45 port, physically restricting and blocking cord access to unauthorized users and to prevent tampering, such as the insertion of a foreign object into the jack

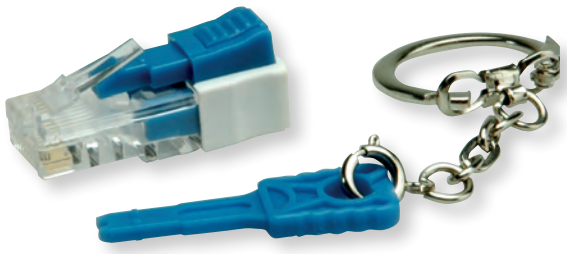

	Order-No.	P.U.
ROLINE Lockable RJ45 Plug with Key	21.17.3067	10

roline®
Designed for Professionals

Category 8 Cabling

DATA CENTER Product | Cat.8 Class I | S/FTP

The demand of bandwidth continues to increase, and most of the existing network cable infrastructures in data centers, which were designed earlier for an intended lifespan of more than 15 years, must face today's challenges and future requirements, which are often unpredictable.

Under these circumstances, the new standard Category 8 cabling has been developed and approved by TIA to provide numerous benefits for data centers looking to seamlessly add bandwidth for Ethernet.

Category 8, the standard for next-generation twisted-pair cabling specifications, allows the transport data up to four times faster on the same type of cabling already being used, supporting 25GBASE-T and 40GBASE-T applications for short distances (up to 30 meters) for switch-to-server connections (primarily in top-of-rack or end-of-row topologies)

The advantages of Category 8 cabling:

- Category 8 offers four times the bandwidth of Category 6A cabling, with internal impairments specified up to 2 GHz
- Category 8 cables are shielded, though shielded cabling systems must be grounded, this is also not an issue in most data centers, since the connections are closer together. Shielding problems like ground loops can typically be avoided when both ends of the channel are in the same room and nearby
- Category 8 connectors use the familiar RJ45 interface. The jacks require proper grounding to the cable and to the device they are installed into (patch panel or outlet), therefore they are designed for field termination
- Category 8 number of connectors is limited to two connectors in the copper channel (excluding connections on end equipment), this is typically adequate in a data center environment and many common enterprise links.
- Maximum reach: 30 meter of channel (maximum 24m link cable + 2x 3m patch cable)

Category	ISO Channel Class	Maximum Bandwidth	Maximum Etherent Data Rate	Cabling System	Connector Type
6	E	250 MHz	1000 Mbit/s	Unshielded or shielded	RJ45
6A	EA	500 MHz	10 Gbit/s	Unshielded or shielded	RJ45
7*	F	600 MHz	10 Gbit/s	Shielded only	Non-RJ45 (IEC 60603-7-71 and IEC 61076-3-104)
7A*	FA	1000 MHz	10 Gbit/s	Shielded only	Non-RJ45 (IEC 60603-7-71 and IEC 61076-3-104)
8	8.I and 8.II	2000 MHz	25 Gbit/s / 40 Gbit/s	Shielded only	RJ45

*** Category 7 and 7A are not recognized by ANSI/TIA-568-C.2**

For a Cat.8 channel link S/FTP Cabling we recommend to use the following components:
21.15.0005 ROLINE S/FTP Cable, Cat.8, Solid Wire, AWG22 (24m)
26.11.0381 ROLINE Cat.8 RJ45 Keystone, Jack, toolless
21.17.3086 ROLINE Cat.8 Shielded Field Connector RJ45 plug
21.15.1851 to 21.15.1853 ROLINE S/FTP Patch Cable Solid Cat.8, Yellow (1m to 3m)
21.15.1861 to 21.15.1863 ROLINE S/FTP Patch Cable Stranded Cat.8, Yellow (1m to 3m)

The accredited German laboratory GHMT has tested and certified this product combination, in a 2 connector Channel of 30 meters, certificate no. z5236c-18-E.

roline® Designed for Professionals

Halogenfree Flame retardant Low Smoke



21.15.0005



21.15.1851



21.15.1861



21.17.3086



26.11.0381

	Order-No.	P.U.
ROLINE S/FTP Cable Cat.8, Solid Wire, LSOH, 100 m	21.15.0005	2
	Order-No.	**P.U.**
ROLINE S/FTP Patch Cord Cat.8, solid, LSOH, yellow, 1.0 m	21.15.1851	100
ROLINE S/FTP Patch Cord Cat.8, solid, LSOH, yellow, 2.0 m	21.15.1852	100
ROLINE S/FTP Patch Cord Cat.8, solid, LSOH, yellow, 3.0 m	21.15.1853	50
	Order-No.	**P.U.**
ROLINE S/FTP Patch Cord Cat.8, stranded, LSOH, yellow, 1.0 m	21.15.1861	100
ROLINE S/FTP Patch Cord Cat.8, stranded, LSOH, yellow, 2.0 m	21.15.1862	100
ROLINE S/FTP Patch Cord Cat.8, stranded, LSOH, yellow, 3.0 m	21.15.1863	50
	Order-No.	**P.U.**
ROLINE Cat.8 Field Connector Plug RJ45	21.17.3086	50
	Order-No.	**P.U.**
ROLINE Keystone Jack, Cat.8, RJ-45, STP, tool-free, silver	26.11.0381	50

VALUE Cat.5e / Cl. D 19“ Patch Panel, 24 Ports, UTP

DATA CENTER Product

- The panel complies with the EIA/TIA 568 TSB40a standard
- The cable connection on the back is implemented via LSA-plus connection technology with colour coding on the top in accordance with EIA/TIA 568 A/B
- 24 unshielded ports



	Order-No. – P.U.
VALUE Cat.5e / Cl. D 19“ Patch Panel, 24 Ports, UTP, black	26.99.0349 – 5

ROLINE Cat.5e / Cl. D 19“ Patch Panel, 24 Ports, UTP

DATA CENTER Product

- The UTP patch panels are compliant with EIA/TIA 568 TSB40a
- LSA-plus technology
- 24 unshielded ports



roline® Designed for Professionals

	Order-No. – P.U.
ROLINE Cat.5e / Cl. D 19“ Patch Panel, 24 Ports, UTP, black	26.11.0349 – 5

VALUE Cat.5e / Cl. D 19“ Patch Panel, 24 Ports, STP

DATA CENTER Product

- The VALUE Cat.5e patch panels comply with the EIA/TIA 568 TSB40a standard
- The cable connection on the back is implemented via LSA-plus connection technology with colour coding on the top in accordance with EIA/TIA 568
- Casing and covering hood of sheet steel
- 24 shielded Ports



	Order-No. – P.U.
VALUE Cat.5e / Cl. D 19“ Patch Panel, 24 Ports, STP, black	26.99.0328 – 5
VALUE Cat.5e / Cl. D 19“ Patch Panel, 24 Ports, STP, light grey	26.99.0329 – 5

ROLINE Cat.5e / Cl. D 19“ Patch Panel, 24 Ports, STP

DATA CENTER Product

- The panels comply with the EIA / TIA 568 Cat. 5e TSB40A standard
- The cable connection on the back is implemented via LSA-plus connection technology with colour coding on the top in accordance with EIA/TIA 568
- Sheet steel housing and cover
- 24 shielded Ports



roline® Designed for Professionals

	Order-No. – P.U.
ROLINE Cat.5e / Cl. D 19“ Patch Panel, 24 Ports, STP, black	26.11.0328 – 3
ROLINE Cat.5e / Cl. D 19“ Patch Panel, 24 Ports, STP, light grey	26.11.0329 – 3

VALUE Cat.6/Cl. E 19“ Patch Panel, 24 Ports, UTP

DATA CENTER Product

- Cost-effective VALUE patch panels for use in Fast Ethernet and Gigabit Ethernet networks
- The panels comply with the EIA/TIA 568A
- The cable connection on the back is implemented via LSA-plus connection technology with colour coding on the top in accordance with EIA/TIA 568
- 24 unshielded ports



	Order-No. – P.U.
VALUE Cat.6/Cl. E 19“ Patch Panel, 24 Ports, UTP, black	26.99.0362 – 5
VALUE Cat.6/Cl. E 19“ Patch Panel, 24 Ports, UTP, light grey	26.99.0355 – 5



VALUE Cat.6 / Cl. E 19“ Patch Panel, 24 Ports STP

DATA CENTER Product

- The VALUE Cat.6/Class E 19“ patch panels fulfil the Cat.6/Class E Permanent Link Standard and is ideal for Gigabit Ethernet networks
- Cable assembly takes place using LSA-plus piercing terminals with colour coding on the top in accordance with EIA/TIA 568
- Sheet steel housing and cover



	Order-No.	P.U.
VALUE Cat.6/Cl. E 19“ Patch Panel, 24 Ports, STP, black	26.99.0353	5
VALUE Cat.6/Cl. E 19“ Patch Panel, 24 Ports, STP, grey	26.99.0354	5

ROLINE Cat.6 / Cl. E 19“ Patch Panel, 24 Ports UTP

DATA CENTER Product

- The ROLINE Cat.6/Class E 19“ patch panels fulfil the Cat.6/Class E Permanent Link Standard and is ideal for Gigabit Ethernet networks
- Cable assembly takes place using LSA-plus piercing terminals with colour coding on the top in accordance with EIA/TIA 568



roline® Designed for Professionals

	Order-No.	P.U.
ROLINE Cat.6/Cl. E 19“ Patch Panel, 24 Ports, UTP, black	26.11.0362	3
ROLINE Cat.6/Cl. E 19“ Patch Panel, 24 Ports, UTP, light grey	26.11.0355	3

ROLINE Cat.6 / Cl. E 19“ Patch Panel, 24 Ports STP

DATA CENTER Product

- The ROLINE Cat.6/Class E 19“ patch panels fulfil the Cat.6/Class E Permanent Link Standard and is ideal for Gigabit Ethernet networks
- Cable assembly takes place using LSA-plus piercing terminals with colour coding on the top in accordance with EIA/TIA 568
- Sheet steel housing and cover





roline® Designed for Professionals

	Order-No.	P.U.
ROLINE Cat.6/Cl. E 19“ Patch Panel, 24 Ports, STP, black	26.11.0361	3
ROLINE Cat.6/Cl. E 19“ Patch Panel, 24 Ports, STP, light grey	26.11.0351	3

VALUE Cat.6A / Cl. EA 19“ Patch Panel, 24 Ports UTP

DATA CENTER Product

- The VALUE Cat. 6A 19“ patch panels fulfil the Cat. 6A/Class EA permanent link standard and are ideal for 10 Gigabit Ethernet networks
- Cable assembly takes place using LSA plus piercing terminals with colour coding on the top in accordance with EIA/TIA 568A
- Sheet steel



	Order-No.	P.U.
VALUE Cat.6A / Cl. EA 19“ Patch Panel, 24 Ports, UTP, black	26.99.0357	5

VALUE Cat.6A / CL. EA 19“ Patch Panel, 24 Ports STP

DATA CENTER Product

- The VALUE Cat. 6A 19“ patch panels fulfil the Cat. 6A/Class EA permanent link standard and are ideal for 10 Gigabit Ethernet networks
- Cable assembly takes place using LSA plus piercing terminals with colour coding on the top in accordance with EIA/TIA 568A
- Sheet steel housing and cover



	Order-No.	P.U.
VALUE Cat.6A / Cl. EA 19“ Patch Panel, 24 Ports, STP, black	26.99.0360	5
VALUE Cat.6A / Cl. EA 19“ Patch Panel, 24 Ports, STP, grey	26.99.0361	5

ROLINE Cat.5e / Cl. D Wall Mount Patch Panel

- The cable connection takes place using LSA plus cable clamps marked with the appropiate colour coding EIA / TIA 568A specifications. The screen connection and strain relief takes place using metallic cable clips.
- Housing and dust cover: metal



roline®
Designed for Professionals

	Order-No. – P.U.
ROLINE Cat.5e / Cl. D Wall Mount Patch Panel, 8 Ports, STP, black	26.11.0310 – 10
ROLINE Cat.5e / Cl. D Wall Mount Patch Panel, 8 Ports, STP, light grey	26.11.0304 – 10

ROLINE Cat.6 / Cl. E 10“ Patch Panel

- For smaller Network Installations 10“-Patch Panels are used
- This ROLINE 10“-Patchpanel offers 12 Ports
- Shielded version, Metal-Casing
- The Panel complies to the Standard of Cat. 6
- The cable connection on the back is implemented via LSA plus technology with colour coding in accordance with standard



roline®
Designed for Professionals

	Order-No. – P.U.
ROLINE Cat.6 / Cl. E 10“ Patch Panel, 12 Ports, STP, grey	26.11.0315 – 5

VALUE Cat.6A / Cl. EA Flush Mount Wall Jack, STP

- The VALUE Cat.6A wall jacks fulfil the Cat.6/Class EA Permanent Link Standard and are ideal for gigabit ethernet networks
- Fully screened box in a metal housing, provides security against EMI (shielded version)
- Cable assembly takes place using LSAplus piercing terminals with colour coding on the top in accordance with EIA/TIA 568

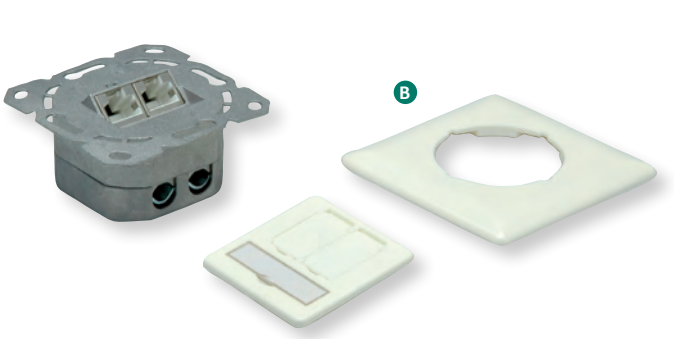

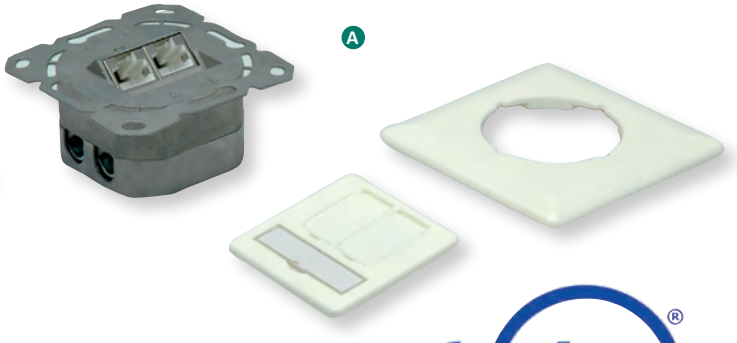

Value®

		Order-No. – P.U.
VALUE Cat.6A / Cl. EA Flush Mount Wall Jack, STP, horizontal, white	A	25.99.8490 – 20
VALUE Cat.6A / Cl. EA Flush Mount Wall Jack, STP, vertical, white	B	25.99.8491 – 20

ROLINE Cat.6A / Cl. EA Flush Mount Wall Jack, STP

- The ROLINE Cat.6A wall jacks fulfil the Cat.6/Class EA Permanent Link Standard and are ideal for Gigabit Ethernet networks
- Fully screened box in a metal housing, provides security against EMI (shielded version)
- Cable assembly takes place using LSAplus piercing terminals with colour coding on the top in accordance with EIA/TIA 568



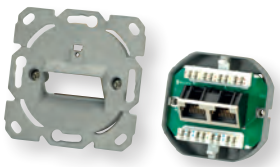

roline®
Designed for Professionals

	Order-No. – P.U.
ROLINE Cat.6A / Cl. EA Flush Mount Wall Jack, STP, white	25.16.8490 – 20

VALUE Cat.6 / Cl. E Surface/Flush Mount Wall Jack

- The VALUE Cat.6/Class E wall mount jacks fulfil the Cat.6/Class E Permanent Link Standard and are ideal for gigabit ethernet networks
- Cable assembly takes place using LSAplus piercing terminals with colour coding on the top in accordance with EIA/TIA 568



Value®

	Order-No. – P.U.
VALUE Cat.6 / Cl. E Surface Mount Wall Jack, STP, white	25.99.8392 – 20
VALUE Cat.6 / Cl. E Surface Mount Wall Jack, UTP, white	25.99.8394 – 20

ROLINE Cat.5e/Cat.6 Keystone Jack, RJ-45

- For data transfer rates of up to 1000Mbit/s
- Cable assembly takes place using LSA-plus piercing terminals with colour coding on the top in accordance with EIA/TIA 568

For a structured unshielded Cat.5e cabling system we recommend to use the following components:
ROLINE Cat.5e UTP Cable, Solid Wire, AWG24: 21.15.0512 (100 m), 21.15.0511 (300 m)
Flush Mount Wall Jack for Keystones, unloaded: 25.16.8579
ROLINE Cat.5e Keystone, RJ-45, unshielded: 26.11.0343 (light grey), 26.11.0342 (black)
19" Keystone Patch Panel, 24 Ports, unshielded: 26.11.0356 (light grey), 26.11.0357 (black)
ROLINE Cat.5e UTP Patch Cord, grey, 5 m: 21.15.0505

For a structured unshielded Cat.6 cabling system we recommend to use the following components:
ROLINE Cat.6 UTP Cable, Solid Wire, AWG23: 21.15.0990 (100 m), 21.15.0991 (300 m)
Flush Mount Wall Jack for Keystones, unloaded: 25.16.8579
ROLINE Cat.6 Keystone, RJ-45, unshielded: 26.11.0353
19" Keystone Patch Panel, 24 Ports, unshielded: 26.11.0356 (light grey), 26.11.0357 (black)
ROLINE Cat.6 UTP Patch Cord, grey, 5 m: 21.15.0935

For a structured shielded Cat.6 cabling system we recommend to use the following components:
ROLINE Cat.6 S/FTP Cable, Solid Wire, AWG23: 21.15.0890 (100 m), 21.15.0891 (300 m)
ROLINE Flush Mount Wall Jack for Keystones, unloaded: 25.16.8579
ROLINE Cat.6 Keystone, RJ-45, shielded: 26.11.0358
ROLINE Cat.6 19" Keystone Patch Panel, 24 ports, shielded: 26.11.0359 (light grey), 26.11.0360 (black)
ROLINE Cat.6 S/FTP Patch Cord, grey, 5 m: 21.15.0835

Our in-house laboratory has tested this cable-plug combination, in a Channel of 100 meters, in compliance with Class E specification.

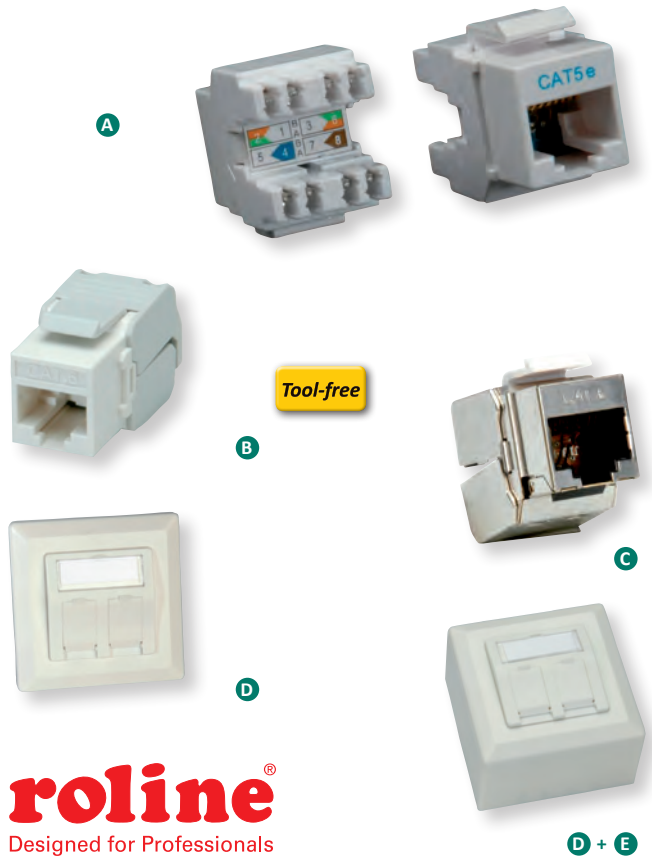

		Order-No.	P.U.
ROLINE Cat.5e/Cl. D Keystone Jack, RJ-45, UTP, light grey	A	26.11.0343	60
ROLINE Cat.6/Cl. E Keystone Jack, RJ-45, UTP, tool-free, white	B	26.11.0353	60
ROLINE Cat.6/Cl. E Keystone Jack, RJ-45, STP, tool-free, silver	C	26.11.0358	60
Flush Mount Wall Oulet for Keystones, 2-port	D	25.16.8579	20
Surface Wall Mount Frame	E	25.16.8484	20

roline®
Designed for Professionals

ROLINE Surface Mount Wall Jack, Cat.6 / Cl. E

- The ROLINE Cat.6/Class E wall outlet sockets fulfil the Cat.6/Class E Permanent Link standard and are ideal for Gigabit Ethernet networks
- Fully screened box in a metal housing, provides security against EMI (shielded version)
- Cable assembly takes place using LSA-plus piercing terminals with colour coding on the top in accordance with EIA/TIA 568
- 45° tilted plug assembly

For a structured shielded cabling system we recommend to use the following components:
ROLINE Cat.6 S/FTP Cable, Solid Wire, AWG23: 21.15.0890 (100 m), 21.15.0891 (300 m)
ROLINE Cat.6 Surface Mount Wall Jack, shielded: 25.16.8392 (white),
ROLINE Cat.6 19" Patch Panel, 24 Ports, shielded: 26.11.0351 (light grey), 26.11.0361 (black); ROLINE Cat.6 S/FTP Patch Cord, grey, 5 m: 21.15.0835.

The accredited German laboratory GHMT has tested and certified this product combination, in a Channel of 100 meters, as being compliant to Class E specifications; certificate no. z2365b-10-E (with flush mount)/z2364b-10-E (with surface mount).



	Order-No.	P.U.
ROLINE Surface Mount Wall Jack, Cat.6 / Cl. E, STP, white	25.16.8392	20
ROLINE Faceplate for Flush Mount Wall Jack, white	25.16.8398	20

roline®
Designed for Professionals

ROLINE Keystone Jack, Cat.5e / Class D, RJ-45, UTP

DATA CENTER Product

- The system is composed of a 19" patch panel frame and the UTP Cat.5e RJ-45 keystone jack
- Assembling takes place over LSA-plus
- Colour code on the keystone jacks based on the standard EIA/TIA 568 A and 568 B

For a structured unshielded Cat.5e cabling system we recommend to use the following components:
ROLINE Cat.5e UTP Cable, Solid Wire, AWG24: 21.15.0512 (100 m), 21.15.0511 (300 m)
ROLINE Flush Mount Wall Jack for Keystones, unloaded: 25.16.8579
ROLINE Cat.5e Keystone, RJ-45, unshielded: 26.11.0343 (light grey), 26.11.0342 (black)
ROLINE Cat.5e 19" Keystone Patch Panel, 24 Ports, unshielded: 26.11.0344 (black), 26.11.0345 (light grey)
ROLINE Cat.5e UTP Patch Cord, grey, 5 m: 21.15.0505
Our in-house laboratory has tested this cable-plug combination, in a Channel of 100 meters, in compliance with Class D specification.

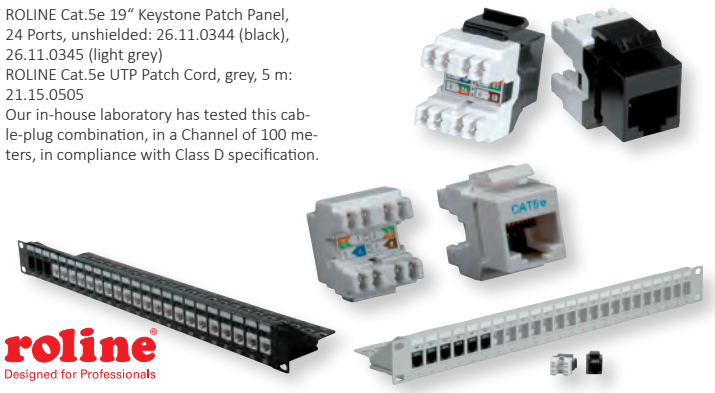

	Order-No.	P.U.
ROLINE Cat.5e / Cl. D Keystone Jack, RJ-45, UTP, black	26.11.0342	60
Keystone 19'' Module frame Cat.5/Cat.6, 24 Ports, blank, UTP, black	26.11.0357	5
ROLINE Cat.5e / Cl. D Keystone Jack, RJ-45, UTP, light grey	26.11.0343	60
Keystone 19'' Module frame Cat.5/Cat.6, 24 Ports, blank, UTP, light grey	26.11.0356	5

VALUE Keystone Jack, Cat.6/Class E, RJ-45, UTP, 180°, Tool-free

Tool-free

Cat.6/Class E Keystone jack for installation in a Keystone blank 19“ patch panel module frame.

- Unshielded construction
- Colour code on the keystone jacks is based on the standard EIA/TIA 568A and 568B
- Toolless installation
- Colour: white





	Order-No. – P.U.
VALUE Keystone Jack, Cat.6/Class E, RJ-45, UTP, 180°, tool-free, white	26.99.0363 – 40
Keystone 19“ Module frame Cat.5/Cat.6, 24 Ports, blank, UTP, light grey	26.11.0356 – 5
Keystone 19“ Module frame Cat.5/Cat.6, 24 Ports, blank, UTP, black	26.11.0357 – 5

ROLINE Keystone Jack, Cat.6/Class E, RJ-45, UTP, Tool-free

Tool-free

- The system is composed of a 19“ patch panel frame and the UTP Cat.6 RJ-45 keystone jacks
- Assembling of cables and keystones takes place over LSA-plus or toolless
- Colour code on the keystone jacks, based on the standard EIA/TIA 568 A and 568 B

For a structured unshielded Cat.6 cabling system we recommend to use the following components:
ROLINE Cat.6 UTP Cable, Solid Wire, AWG23: 21.15.0990 (100 m), 21.15.0991 (300 m)
Flush Mount Wall Jack for Keystones, unloaded: 25.16.8579
ROLINE Cat.6 Keystone, RJ-45, unshielded: 26.11.0352 (black), 26.11.0353 (white)
19“ Keystone Patch Panel, 24 Ports, unshielded: 26.11.0356 (light grey), 26.11.0357 (black)
ROLINE Cat.6 UTP Patch Cord, grey, 5 m: 21.15.0935

Our in-house laboratory has tested this cable-plug combination, in a Channel of 100 meters, in compliance with Class E specifications.

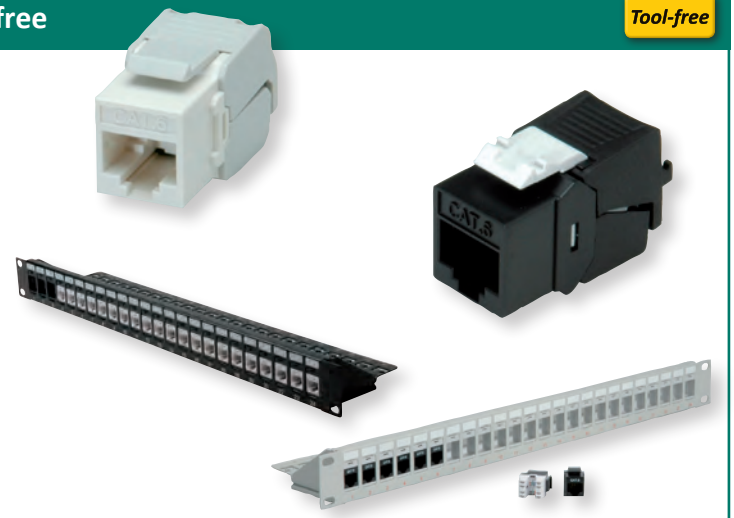

	Order-No. – P.U.
ROLINE Keystone Jack, Cat.6/Class E, RJ-45, UTP, tool-free, black	26.11.0352 – 60
Keystone 19“ Module frame Cat.5/Cat.6, 24 Ports, blank, UTP, black	26.11.0357 – 5
ROLINE Cat.6 Keystone Jack, RJ-45, UTP, tool-free, white	26.11.0353 – 60
Keystone 19“ Module frame Cat.5/Cat.6, 24 Ports, blank, UTP, light grey	26.11.0356 – 5

roline®
Designed for Professionals

ROLINE Keystone Jack, Cat.6/Class E, RJ-45, STP, Tool-free

Tool-free

- The ROLINE Cat. 6/Class E 19“ keystone patch panel system is composed of a 19“ STP patch panel frame (please order separately!) and these shielded Cat.6 RJ-45 keystone jacks
- Colour code on the keystone jacks based on the standard EIA/TIA 568
- Colour: silver

For a structured shielded Cat.6 cabling system we recommend to use the following components:
ROLINE Cat.6 S/FTP Cable, Solid Wire, AWG23: 21.15.0890 (100 m), 21.15.0891 (300 m)
ROLINE Flush Mount Wall Jack for Keystones, unloaded: 25.16.8579
ROLINE Cat.6 Keystone, RJ-45, shielded: 26.11.0358
ROLINE Cat.6 19“ Keystone Patch Panel, 24 ports, shielded: 26.11.0359 (light grey), 26.11.0360 (black)
ROLINE Cat.6 S/FTP Patch Cord, grey, 5 m: 21.15.0835

Our in-house laboratory has tested this cable-plug combination, in a Channel of 100 meters, in compliance with Class E specification.

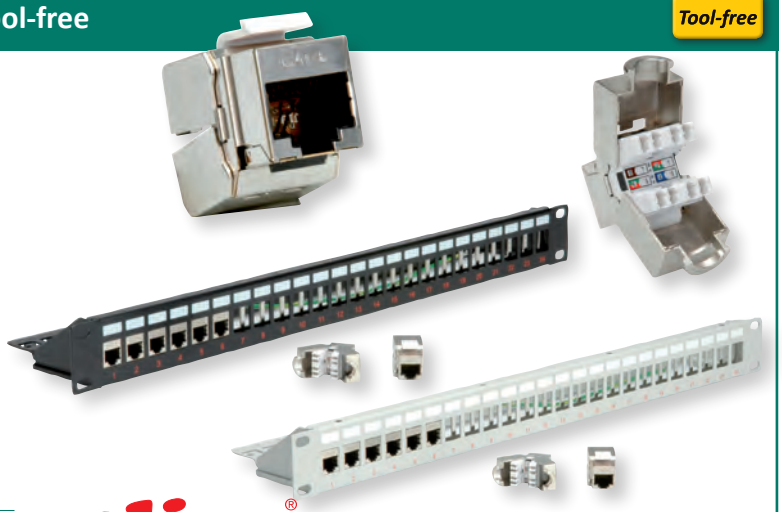

	Order-No. – P.U.
ROLINE Cat.6/Class E Keystone Jack, RJ-45, STP, tool-free, silver	26.11.0358 – 60
Keystone 19“ Module frame Cat.5/6/6A, 24 Ports, STP, black	26.11.0360 – 5
Keystone 19“ Module frame Cat.5/6/6A, 24 Ports, STP, light grey	26.11.0359 – 5

roline®
Designed for Professionals

ROLINE Keystone Jack, Cat. 6A, RJ-45, UTP, Tool-free

Tool-free

- The Cat.6A keystones support data transfer rates of up to 10 GBit/s and a bandwidth of 500 MHz
- Colour code on the keystone jacks is based on the standard EIA/TIA 568
- Can be used together with Keystone Module frame 26.11.0357 (black) or 26.11.0356 (light grey), Flush Mount Wall Oulet for Keystones, 2-port (25.16.8579)
- Colour: white

	Order-No. – P.U.
ROLINE Keystone Jack, Cat. 6A, RJ-45, UTP, tool-free, white	26.11.0337 – 50
Keystone 19'' Module frame Cat.5/Cat.6, 24 Ports, blank, UTP, black	26.11.0357 – 5
Keystone 19'' Module frame Cat.5/Cat.6, 24 Ports, blank, UTP, light grey	26.11.0356 – 5
Flush Mount Wall Oulet for Keystones, 2-port	25.16.8579 – 20
Surface Wall Mount Frame	25.16.8484 – 20

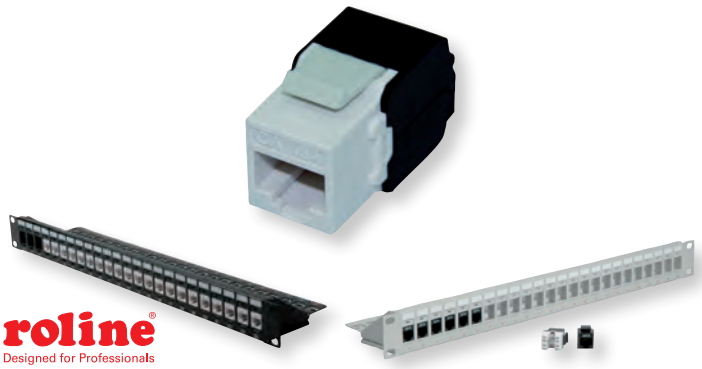

VALUE Keystone, Cat.6A, RJ-45, STP, Tool-free

Tool-free

The low-cost solution for Cat 6A cabling for data rates up to 10Gbit/s!
Cat.6/Class E Keystone jack for installation in a Keystone blank 19" patch panel module frame.
- Connect the cable to the Keystones on modified LSA connections
- Toolless mounting- without using a LSA tool: cable wires are simply placed into the guides of Keystone module, the module is closed and compressed- the connection is ready for use
- Colour code on the Keystone jacks based on the standard EIA/TIA 568 A & B
- Colour: silver

	Order-No. – P.U.
VALUE Cat.6A Keystone, RJ-45, STP, tool-free, silver	26.99.0366 – 40
Keystone 19'' Module frame Cat.5/Cat.6/Cat.6A, 24 Ports, STP, black	26.11.0360 – 5
Keystone 19'' Module frame Cat.5/Cat.6/Cat.6A, 24 Ports, STP, light grey	26.11.0359 – 5
Flush Mount Wall Oulet for Keystones, 2-port	25.16.8579 – 20
Surface Wall Mount Frame	25.16.8484 – 20

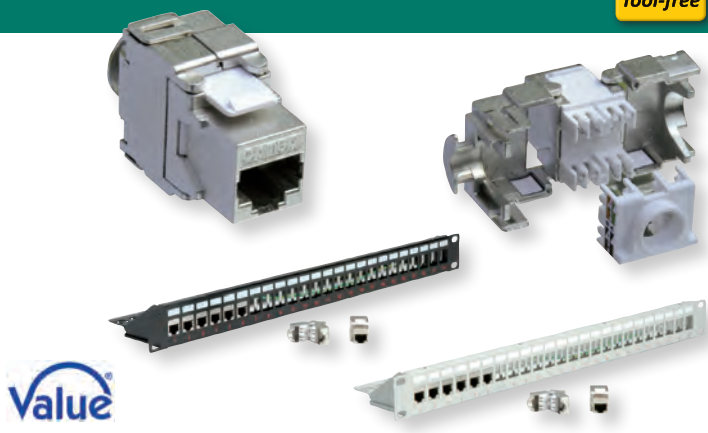

ROLINE Keystone Jack, Cat.6A, RJ-45, STP, Tool-free

Tool-free

Keystone in proven ROLINE quality!
- The ROLINE Cat.6A Keystones are ideal for use in Gigabit Ethernet networks. They support data transfer rates up to 10 Gbit/s with a bandwidth of 500 MHz
- Connect the cable to the Keystones via LSA connections without special tools - place the cable ends simply into the guides (with color coding), close and compress the module- the connection is ready for use
- The Keystone modules can be „latched" into a 19'' module support rack, which is optionally available in black (26.11.00360) or light gray (26.11.0359). Or in combination with a module receptacle (25.16.8579) you can realise a junction box.
- The Keystones are coded according to EIA/TIA 568

	Order-No. – P.U.
ROLINE Keystone Jack, Cat.6A, RJ-45, STP, tool-free, silver	26.11.0367 – 50
Keystone 19'' Module frame Cat.5/Cat.6/Cat.6A, 24 Ports, STP, black	26.11.0360 – 5
Keystone 19'' Module frame Cat.5/Cat.6/Cat.6A, 24 Ports, STP, light grey	26.11.0359 – 5

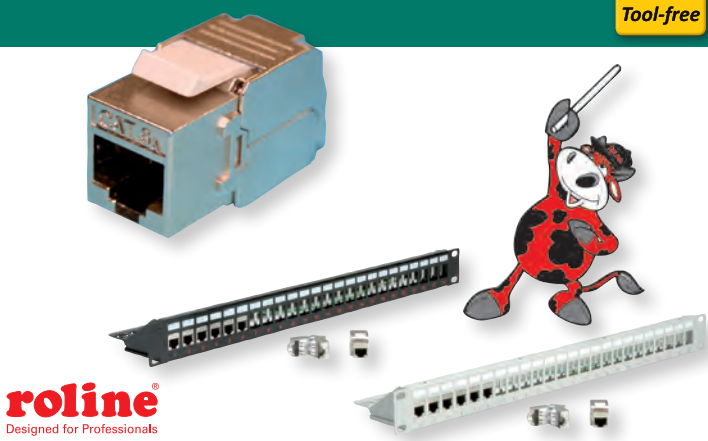

VALUE Keystone Jack, Cat.6A, RJ-45, STP, tool-free, SLIM

Keystone in Cat.6A quality for use in 10 Gigabit Ethernet networks with a bandwidth of 500 MHz - now in a particularly slim design
- The cables are connected to the keystones without tools- the cable cores are simply inserted into the guides; the module is closed and compressed- the connection is ready
- Keystones with printed colour coding according to EIA / TIA 568
- The Keystone modules can be latched into a 19" module carrier (26.11.0360 / 26.11.0359 or 26.99.0331 / 26.99.0332) with earthing connection. Or they become a junction box together with a module holder 25.16.8579
- The VALUE Cat.6A/Class EA 19" keystones meet the transmission requirements of a Cat.6A/Class EA Link
- The particularly slim design offers you considerable advantages in high-density network environments

	Order-No. – P.U.
VALUE Keystone Jack, Cat.6A, RJ-45, STP, tool-free, SLIM, silver	26.99.0375 – 10



VALUE Cat.6A / Cl. EA Keystones, RJ-45, Tool-free

Tool-free

The low-cost solution for Cat 6.A cabling for data rates up to 10Gbit/s! Cat.6A/Class EA Keystone jack for installation in a Keystone blank 19“ patch panel module frame.

- Toolless mounting- without using a LSA tool: cable wires are simply placed into the guides of Keystone module, the module is closed and compressed- the connection is ready for use
- Cat.6A Keystone Jack (Module) UTP/ STP
- Unshielded/shielded housing
- Contacts gold plated
- Slim type
- With plastic internal shutter black
- 180 degree cable entry
- Support PoE per IEEE 802.3af, PoE+ per IEEE 802.3at
- For cable AWG 22-24(0.45-0.65mm)
- For cable OD: 5.0-8.5mm
- Color code on the Keystone jacks based on the standard EIA/TIA 568 A & B
- Dimensions (L x W x H): 37.9× 15.8 × 22.2mm



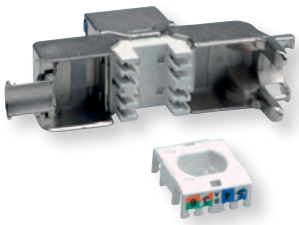


	Order-No. – P.U.
VALUE Cat.6A / Cl. EA Keystone, RJ-45, UTP, with shutter, tool-free	26.99.0377 – 50
VALUE Cat.6A / Cl. EA Keystone, RJ-45, STP, with shutter, tool-free	26.99.0378 – 50

ROLINE Cat.6A / Cl. EA Keystones, RJ-45, Tool-free

Tool-free

The low-cost solution for Cat.6A cabling for data rates up to 10Gbit/s! Cat.6A/Class EA Keystone jack for installation in a Keystone blank 19“ patch panel module frame.

- Toolless mounting- without using a LSA tool: cable wires are simply placed into the guides of Keystone module, the module is closed and compressed- the connection is ready for use
- Cat.6A Keystone Jack (Module) UTP
- Unshielded housing
- Contacts gold plated
- Slim type
- With plastic internal shutter black
- 180 degree cable entry
- Support PoE per IEEE 802.3af, PoE+ per IEEE 802.3at
- For cable AWG 22-24(0.45-0.65mm)
- For cable OD: 5.0-8.5mm
- Color code on the Keystone jacks based on the standard EIA/TIA 568 A & B
- Dimensions (L x W x H): 37.9× 15.8 × 22.2mm




	Order-No. – P.U.
ROLINE Cat.6A / Cl. EA Keystone, RJ-45, UTP, with shutter, tool-free, black	21.17.0320 – 50
ROLINE Cat.6A / Cl. EA Keystone, RJ-45, STP, with shutter, tool-free, silver	21.17.0321 – 50

ROLINE Cat.6/6A Keystone Jacks, SLIM

Tool-free

Cat.6 Keystones in ROLINE quality for use in Gigabit Ethernet networks or in Cat.6A 10 Gigabit Ethernet networks with a bandwidth of 500 MHz

- Connect the cable to the Keystones without the use of tools- the cable wires are simply placed in the guides, the module should be closed and compressed- ready is the connection
- Toolless Assembling
- The Keystone modules can be hooked into a 19“ module (unshielded: 26.11.0357 26.11.0356 in black or light gray / black or shielded 26.11.0360 26.11.0359 in light gray). Or together with a flush mount wall jack module for keystones 25.16.8579 they become a junction box
- Colour code on the keystone jacks is based on the standard EIA/TIA 568
- The ROLINE Cat 6 / Class E 19“-Keystones satisfy the transmission properties of a Cat 6 / Class E links
- The ROLINE Cat 6A / Class EA 19 „-Keystones meet the transmission properties of a Cat 6A / Class EA links
- Unique wire management stuffer cap separates pairs, prevents crossed pairs, and reduces crosstalk

Shielded Versions:

- Shield housing made of die-cast solid zinc for better ANEXT and EMI protection.



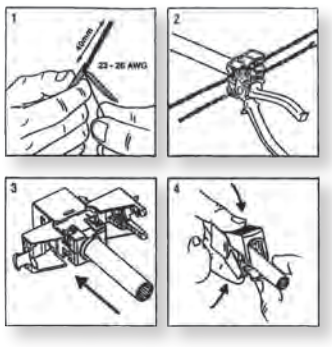

	Order-No. – P.U.
ROLINE Cat.6/Class E Keystone Jack SLIM, RJ-45, UTP, tool-free, black	26.11.0375 – 50
ROLINE Cat.6/Class E Keystone Jack SLIM, RJ-45, STP, tool-free, silver	26.11.0377 – 50
ROLINE Cat.6A /Cl. EA, Keystone Jack SLIM, RJ-45, UTP, tool-free, black	26.11.0376 – 50
ROLINE Cat.6A /Cl. EA, Keystone Jack SLIM, RJ-45, STP, tool-free, silver	26.11.0378 – 50

VALUE Distribution/Consolidation Box, 4 Keystones

Distribution boxes can increase the flexibility of desk locations in open office environments. They are also designed for use as consolidation points and they can be useful in offices where frequent relocation of outlets in the work area is required. Easy to install on walls, under raised floors.

- Compatible with all snap-in connectors (keystones), which can be easily inserted/ removed by a simple one click movement.
- Box for 4 modules RJ45 keystone connectors
- Mounting holes for UTP/STP keystones
- Hinged lid
- Cable openings at front protected by hinged cover and rear with dust protection cover
- Material: steel
- Color: black (similar to RAL9005)
- Space saving, easy to install

- Remark: Keystones are not included. Please order them separately.

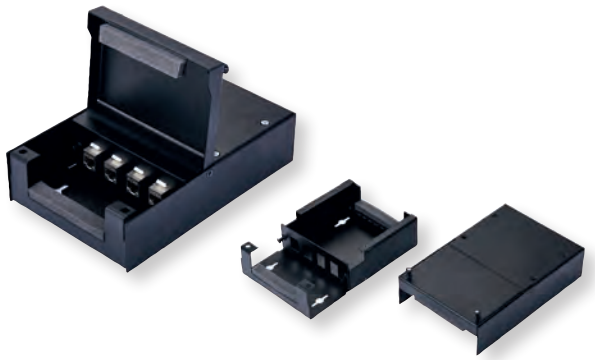

	Order-No. – P.U.
VALUE Distribution/Consolidation Box, 4 Keystones, black	26.99.0330 – 10

VALUE Keystone Module Frame 8 / 12 Ports, blank, UTP

- Patch panel module frame for UTP Cat.5 / Cat.6 RJ-45 keystone jacks
- Assembling of cables and keystones takes place over LSA-plus
- Color code on the keystone jacks, based on the standard EIA/TIA 568 A and 568 B
- 8 ports
- Color: Black

- Remark: Keystones are not included. Please order them separately.





	Order-No. – P.U.
Keystone Module frame, 8x RJ45, blank, UTP, black	26.99.0331 – 5
Keystone Module frame, 12x RJ45, blank, UTP, black	26.99.0332 – 5

VALUE DIN Rail Adapter, Empty, 1x / 2x Keystones

DIN Rail Adapter, empty for 1x / 2x Keystones

- Stainless Steel DIN-Rail Adapter for Keystone, coupler
- For carrying Keystone modules

Note: Delivery without Keystone Modules, please order them separately

- Contents: 1x Adapter

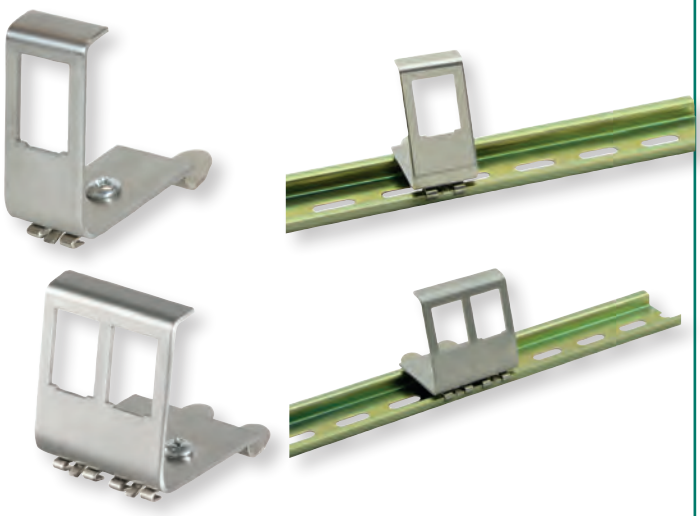

	Order-No. – P.U.
VALUE DIN Rail Adapter, empty, 1x Keystone	21.99.3008 – 10
VALUE DIN Rail Adapter, empty, double for 2x Keystones	21.99.3009 – 10

ROLINE DIN Rail Adapter for Keystones

- Stainless Steel DIN-Rail Adapter for Keystone, coupler
- For carrying Keystone modules
- For example, an 8-pole e.g. ROLINE Cat. 6A Keystone 26.11.0353/.0358/.0366...

Note: Delivery without Keystone Modules

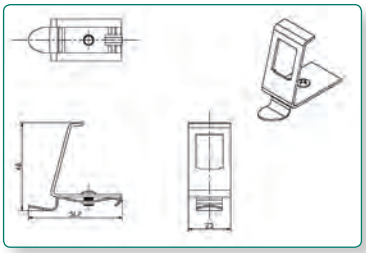





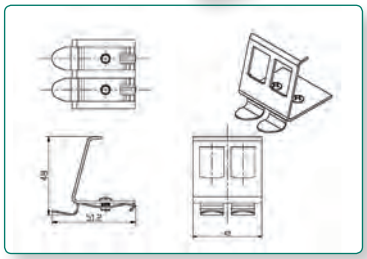

	Order-No. – P.U.
ROLINE DIN Rail Adapter, empty, 1x for one Keystone	21.13.1307 – 10
ROLINE DIN Rail Adapter, empty, double for 2x Keystones	21.13.1308 – 10

roline®
Designed for Professionals

ROLINE Keystone Holder for DIN Rail

- Cable access variable 45° from the top or at the bottom, connection direction 45° downwards
- Construction width 1 unit
- Potential equalization via an integrated potential equalization plate
- Integrated dust cover
- Snap mechanism
- Suitable modules: 26.11.0375 ... 26.11.0378

Note: Delivery without Keystone Modules





	Order-No. – P.U.
ROLINE Keystone Holder (for 26.11.0375-0378), DIN Rail	26.11.0339 – 20

roline®
Designed for Professionals

VALUE USB 3.0 / HDMI / Keystone Module

Ideal solution to easily connect a Macbook, Ultrabook, Notebook/Laptop or PC to a HDD/SSD through e.g. a floor tank, wall outlet or tablebox.

- Keystone with two USB 3.0 F/F sockets
- Ideal for home offices, conference rooms and classrooms
- Contents: 1x Keystone







	Order-No. – P.U.
VALUE USB 3.0 Keystone Module, 1pc/set, black	25.99.8207 – 20
VALUE HDMI Keystone Module, black	25.99.8208 – 20
VALUE Keystone Socket Cover, 10pcs/set , black	25.99.8209 – 20

Value®

VALUE Cat.6A Keystone Modular Coupler, STP

- The shielded RJ-45 couplers are able to extend Twisted Pair Cat.6a cables
- Best transmission characteristics for pair combination 1/2 and 3/6 (as used by all Ethernet versions)
- Whole Housing of metal to safe the signals against electrical and magnetical interferences
- 8 contacts, 1:1 connected



	Order-No. – P.U.
VALUE Cat.6A Keystone Modular Coupler, STP	21.99.3006 – 20

ROLINE Cat.6A Keystone Modular Coupler, STP

- The shielded RJ-45 couplers are able to extend Twisted Pair Cat.6A cables
- Best transmission characteristics for pair combination 1/2 and 3/6 (as used by all Ethernet versions)
- Hole Housing of metal to safe the signals against electrical and magnetical interferences
- 8 contacts, 1:1 connected





	Order-No. – P.U.
ROLINE Cat.6A Keystone Modular Coupler, STP	21.17.3006 – 20

RJ-45 Keystone Modular Couplers, Cat.6

- The couplers are available in 2 versions:
  - shielded with metal housing, colour: silver
  - unshielded with plastic housing, colour: black
- The couplers are able to extend Cat.6 cables
- All couplers with eight contacts, 1:1 connected
- Can be installed in suitable keystone patch panels, e. g.:
  - Keystone Blank Patch Panel, 24 Ports, unshielded, light grey (26.11.0356)
  - Keystone Blank Patch Panel, 24 Ports, unshielded, black (26.11.0357)
  - Keystone Blank Patch Panel, 24 Ports, shielded, light grey (26.11.0359)
  - Keystone Blank Patch Panel, 24 Ports, shielded, black (26.11.0360)

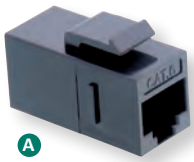



		Order-No. – P.U.
VALUE RJ-45 Keystone Modular Coupler, Cat.6, UTP, black	A	21.99.3003 – 20
VALUE RJ-45 Keystone Modular Coupler, Cat.6, STP	B	21.99.3004 – 20
ROLINE RJ-45 Keystone Modular Coupler, Cat.6, UTP, black	A	21.17.3003 – 20
ROLINE RJ-45 Keystone Modular Coupler, Cat.6, STP, silver	B	21.17.3004 – 20

VALUE Kink Protection Hood for RJ-45

- Kink protection hood for RJ45 cables
- Suitable for round cables with max. external diameter 6.5 mm
- Not suitable for HiRose plugs
- Package unit 10 connectors



	Order-No. – P.U.
VALUE Kink protection hood for RJ-45, grey, grey, 10 pcs.	12.99.0000 – 10

ROLINE Modular Plugs

- For Cat.5e/Cat.6 cabling systems
- Modular plugs shielded/unshielded
- 12.01.1087/1089, 21.17.3060/3061 for stranded wire
- 21.17.3062/21.17.3063 for solid wire; with insert
- Package unit: 10 pieces

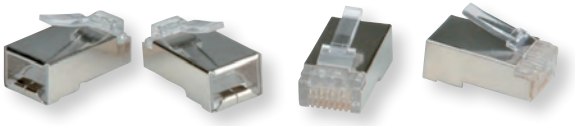

	Order-No. – P.U.
ROLINE Cat.5e Modular Plug, UTP, for Stranded Wire, 10 pcs.	12.01.1087 – 100
ROLINE Cat.5e Modular Plug, STP, for Stranded Wire, 10 pcs.	12.01.1089 – 100
ROLINE Cat.6 Modular Plug, UTP, for Stranded Wire, 10 pcs.	21.17.3060 – 50
ROLINE Cat.6 Modular Plug, STP, for Stranded Wire, 10 pcs.	21.17.3061 – 50
ROLINE Cat.6 Modular Plug, UTP, for Solid Wire, 10 pcs.	21.17.3062 – 50
ROLINE Cat.6 Modular Plug, STP, for Solid Wire, 10 pcs.	21.17.3063 – 50

VALUE Cat.6/6A Modular Plug, UTP, for Stranded Wire

- Modular Plugs unshielded
- Gold plated
- For stranded wire
- Package unit 10 /100 connectors

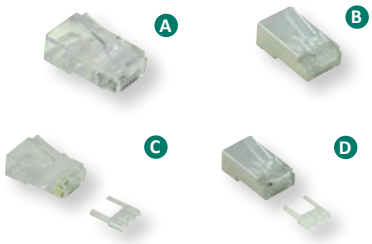

		Order-No. – P.U.
VALUE Cat.5e Modular Plug, UTP, for Stranded Wire, 10 pcs.	A	21.99.3060 – 50
VALUE Cat.5e Modular Plug, STP, for Stranded Wire, 10 pcs.	B	21.99.3061 – 50
VALUE Cat.6 Modular Plug, UTP, for Stranded Wire, 10 pcs.	C	21.99.3062 – 50
VALUE Cat.6 Modular Plug, STP, for Stranded Wire, 10 pcs.	D	21.99.3063 – 50
VALUE Cat.6/6A Modular Plug, UTP, for Stranded Wire, 100 pcs.		21.99.3064 – 5
VALUE Cat.6/6A Modular Plug, STP, for Stranded Wire, 100 pcs.		21.99.3065 – 5

ROLINE Cat.6 / Cl. E Modular Plug, UTP/STP, Arch latch

- Cat.6 modular plugs, 8P8C
- Unshielded / Shielded
- Gold plated contacts
- For solid wire (max. OD Ø 6.5mm)
- For round cables
- With insert
- Package unit 10 connectors

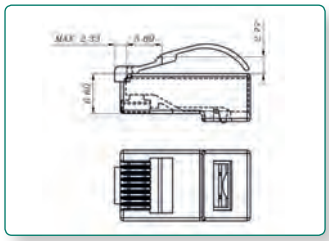

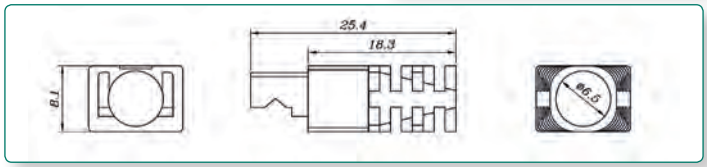

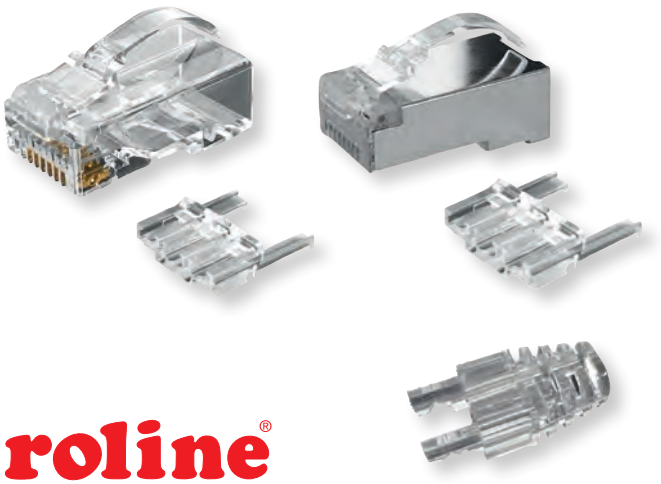

	Order-No. – P.U.
ROLINE Cat.6 / Cl. E Modular Plug, UTP, Arch latch, 10 pcs.	21.17.3090 – 10
ROLINE Cat.6 / Cl. E Modular Plug, STP, Arch latch, 10 pcs.	21.17.3091 – 10

roline®
Designed for Professionals

VALUE Field Plug Cat.6 / Cl. E, UTP/STP

Tool-free

- Fast and easy tool-free installable unshielded/shielded RJ45 connector
- Cat.6/Class E performance according to ISO/IEC11801 and IEC60603-7
- Compact cable manager for round Solid cable AWG 23-26(1/0.41-1/0.575mm) and stranded cable AWG 24-26(7/0.16-7/0.20mm)
- For cable with outer diameter OD: 6.0- 9.0mm
- Pair management according to TIA 568B and TIA 568A colour codes
- Strain relief with cable tie and black transparent dust cup and boot
- Color: Transparent black

Value®



	Order-No. – P.U.
VALUE Field Plug Cat.6 / Cl. E, UTP	26.99.0370 – 50
VALUE Field Plug Cat.6 / Cl. E, STP	26.99.0371 – 50

VALUE Field Plug Cat.6A / Cl. EA, UTP/STP

Tool-free

- Fast and easy tool-free installable unshielded/shielded RJ45 connector
- Cat.6A / Class EA performance according to ISO/IEC11801 and IEC60603-7
- Compact cable manager for round Solid cable AWG 23-26(1/0.41-1/0.575mm) and stranded cable AWG 24-26(7/0.16-7/0.20mm)
- For cable with outer diameter OD: 6.0- 9.0mm
- Pair management according to TIA 568B and TIA 568A colour codes
- Strain relief with cable tie and black transparent dust cup and boot
- Color: Transparent black

Value®



	Order-No. – P.U.
VALUE Field Plug Cat.6A / Cl. EA, UTP	26.99.0372 – 50
VALUE Field Plug Cat.6A / Cl. EA, STP	26.99.0373 – 50

VALUE Connection Module Cat.6A / Cl. EA, STP

Tool-free

- The VALUE Junction module is used to repair or extend shielded Cat. 6A cables
- With this module all 4 or 8 wired installation cables with AWG24 and with an outside diameter from 6.2mm can be installed **(only solid wire)**
- Equipped with the modern LSA connection technology, all cables in accordance with EIA/TIA 568A or 568B can be easily installed
- With the use of the STP type junction box, it's safe against electrical and magnetical interferences



Value®

	Order-No. – P.U.
VALUE Connection Module Cat.6A / Cl. EA, STP	26.99.0380 – 50

ROLINE Field Plug Cat.6A / Cl. EA, STP

Tool-free

- Fast and easy tool-free installable unshielded RJ45 connector
- Cat.6A / Class EA performance according to ISO/IEC11801 and IEC60603-7
- Compact cable manager for round Solid cable AWG 23-26(1/0.41-1/0.575mm) and stranded cable AWG 24-26(7/0.16-7/0.20mm)
- For cable with outer diameter OD: 6.0 - 9.0mm
- Pair management according to TIA 568B and TIA 568A colour codes
- Robust zinc die-cast housing
- Strain relief with cable tie and black transparent dust cup and boot
- Color: silver

roline®
Designed for Professionals



	Order-No. – P.U.
ROLINE Field Plug Cat.6A / Cl. EA, STP	21.17.0323 – 50

VALUE Junction Box Cat.6A / Cl. EA

- The VALUE Junction box is used to repair or extend Cat.6A cables
- With this box all 4 or 8 wired installation cables with AWG24 and with an outside diameter from 4mm can be installed
- Equipped with the modern LSA connection technology, all cables in accordance with EIA/TIA 568A or 568B can be easily installed

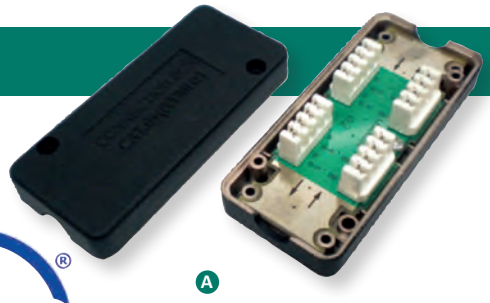

		Order-No. – P.U.
VALUE Junction Box Cat.6A / Cl. EA, UTP	A	21.99.3048 – 25
VALUE Junction Box Cat.6A / Cl. EA, STP		21.99.3049 – 25

ROLINE Junction Boxes

The ROLINE junction box is used to repair or extend Cat.5e and Cat.6 cables.

- Four different types are available, two UTP types for the unshielded cable and two STP types for the shielded cable
- With this box all 4 or 8 wired installation cables with AWG24 and with a cover from 4 mm (UTP type) up to 6.2 mm (STP type) can be installed
- Equipped with the LSA connection technology, all cables in accordance with EIA/TIA 568 can be easily installed
- With the use of the STP type junction box, it's safe against electrical and magnetical interferences



		Order-No. – P.U.
ROLINE Junction Box Cat.5e, STP		21.17.3035 – 100
ROLINE Junction Box Cat.5e, UTP		21.17.3036 – 200
ROLINE Junction Box Cat.6 / Cl. E, STP	A	21.17.3065 – 20
ROLINE Junction Box Cat.6 / Cl. E, UTP		21.17.3066 – 20

VALUE RJ-45 Modular Couplers, Cat.6 / Cl. E

- The couplers are available in 2 versions:
  - shielded with metal housing, colour: silver
  - unshielded with plastic housing, colour: black
- The couplers are able to extend Cat.6 cables
- All couplers with eight contacts, 1:1 connected

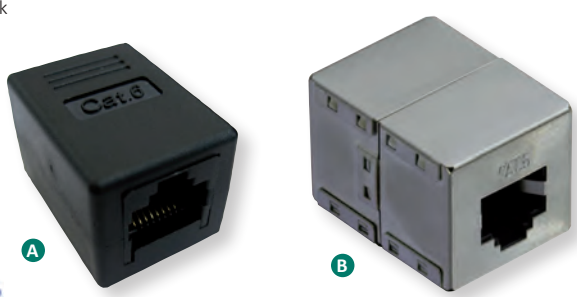

		Order-No. – P.U.
VALUE RJ-45 Modular Coupler, Cat.6 / Cl. E, UTP, black	A	21.99.3001 – 20
VALUE RJ-45 Modular Coupler, Cat.6 / Cl. E, STP, silver	B	21.99.3002 – 20

ROLINE Cat.5e / Cl. D Modular Couplers

- The ROLINE couplers are available in two versions:
  - shielded with metal housing to safe the signals against electrical and magnetical interferences, colour: silver
  - unshielded with plastic housing, colour: white resp. black
- The couplers are able to extend Cat.5e resp. Cat.6 cables
- All couplers with eight contacts, 1:1 connected

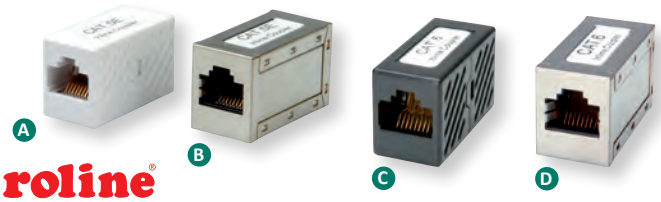

		Order-No. – P.U.
ROLINE Cat.5e / Cl. D Modular Coupler, UTP, white	A	21.17.3001 – 20
ROLINE Cat.5e / Cl. D Modular Coupler, STP, silver	B	21.17.3002 – 20
ROLINE RJ-45 Modular Coupler, Cat.6, UTP, black	C	21.17.3043 – 200
ROLINE RJ-45 Modular Coupler, Cat.6, STP, silver	D	21.17.3041 – 200

VALUE T-Adapters Cat.5e

- For the use with two 10/100 LAN connections over one (full wired) 8-wire cable
- Connection cable (17 cm) with RJ-45 plug; adapter with two RJ-45 jacks
- Pin assignment of connectors: pairs 1, 2 and 3, 6
- Wiring scheme on the adapter
- For Cat. 5e installations
- **Note: The adapters can be used only pairwise**

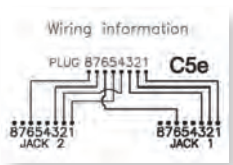



		Order-No. – P.U.
VALUE T-Adapter Cat.5e / Cl. D, UTP, white	A	21.99.3045 – 50
VALUE T-Adapter Cat.5e / Cl. D, STP, silver	B	21.99.3050 – 50

ROLINE T-Adapter Cat. 5e/6/6A, UTP / STP (as pair)

10/100 T-adapter for using two LAN connections via one (fully occupied) 8-core cable

- Adapter with two RJ-45 jacks
- Pin assignment of connectors: pairs 1, 2 and 3, 6
- Wiring scheme on the adapter
- For Cat. 5e/6/6A installations

- Note: The adapters can be used only pairwise; Works only with Fast Ethernet (100 MBit). Not suitable for Gigabit or PoE applications.

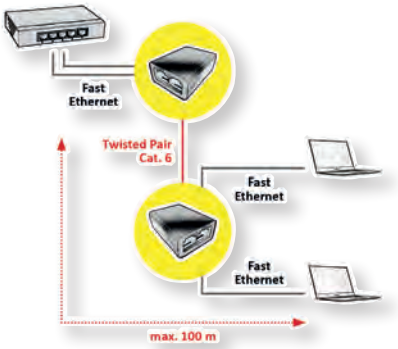

21.17.3088



21.17.3087



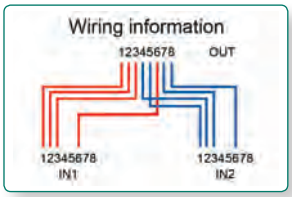

	Order-No. – P.U.
ROLINE T-Adapter Cat. 5e/6/6A, UTP, black	21.17.3087 – 10
ROLINE T-Adapter Cat. 5e/6/6A, STP, black	21.17.3088 – 10

roline®
Designed for Professionals

VALUE RJ45 Modular Coupler, Cat.6 / Class E, STP, Outdoor/Industrial

CAT. 6 coupler for easily connecting or extending patch cables in industrial environments to protect the connection from dust or moisture

- The coupler is able to extend Cat.6 cables
- Dustproof cable gland for industrial applications
- Offers protection for the connection against moisture and soiling
- Quick and easy installation
- 2x shielded RJ45 ports
- Suitable for cable diameters up to 3- 8 mm
- For waterproofing we recommend patchcords with a 6mm- 8mm O.D.
- Dimensions: length 136 mm
- Diameter: 30mm
- 8 contacts, 1:1 connected







	Order-No. – P.U.
VALUE RJ45 Modular Coupler, Cat.6 / Cl. E, STP, Outdoor/Industrial	21.99.3005 – 10

VALUE RJ45 Modular Coupler, Cat.6A / Cl. EA, STP, Outdoor/Industrial

CAT. 6a coupler for easily connecting or extending patch cables in industrial environments to protect the connection from dust or moisture

- The coupler is able to extend Cat.6a cables
- Dustproof cable gland for industrial applications
- Offers protection for the connection against moisture and soiling
- Quick and easy installation
- 2x shielded RJ45 ports
- Suitable for cable diameters up to 3- 8 mm
- For waterproofing we recommend patchcords with a 6mm- 8mm O.D.
- Dimensions: length 121.5 mm
- Diameter: 28mm
- 8 contacts, 1:1 connected







	Order-No. – P.U.
VALUE RJ45 Modular Coupler, Cat.6A / Cl. EA, STP, Outdoor/Industrial, black	21.99.3007 – 20

19“ Cable Manager, 140x100mm, Metal

ROLINE 19“ cable manager with curved opening for easy cable routing - the 140x100mm cable manager offers plenty of space for your cable harnesses and ensures tidy network technology in your server cabinet

- For mounting on 19“ panel/slide mounts
- Helps with the clean cabling of your network technology
- Cable routing laterally in front of the 19“ bracket
- Cable manager with 5mm metal thickness, galvanized; angle welded
- Contents: Cable Manager

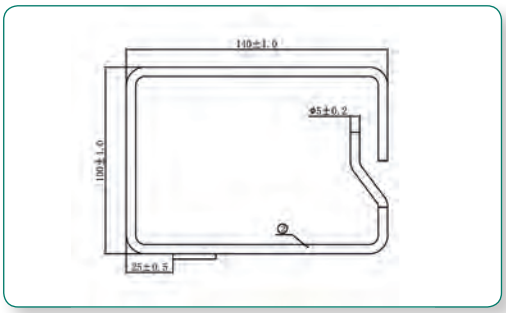

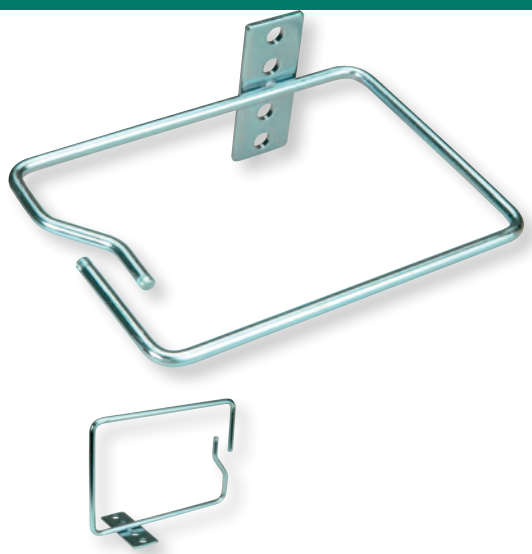

	Order-No.	– P.U.
19“ Cable Manager, 140x100mm, metal, silver	26.30.0009	– 5

19“ Cable Manager, 80x80mm, Plastic

19“ cable manager made of soft plastic for easy and flexible cable routing - the 80x80mm cable manager offers plenty of space for your cable harnesses and ensures tidy network technology in your server cabinet

- For mounting on 19“ UHs
- Helps with the clean cabling of your network technology
- Cable routing laterally in front of the 19“ bracket
- Plastic cable manager in 80x80mm
- Contents: Cable Manager

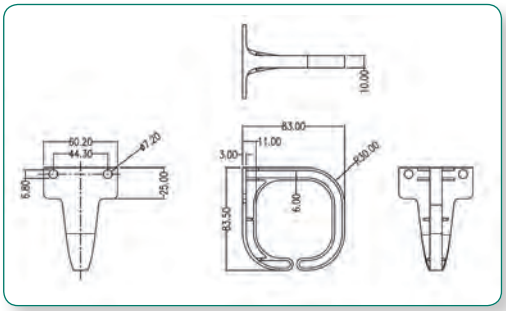



	Order-No.	– P.U.
19“ Cable Manager, 80x80mm, plastic, black	26.99.0318	– 50

19“ Front Panel 1U with Patch channel 40 x 40 mm / 40 x 60 mm / 40 x 80 mm

DATA CENTER Product

19“ front panel with one Unit Height (UH) and 40x40 / 60 /80mm cable duct, painted in light grey or black

Note: For the mounting of the 19“ blind plates you need additional mounting material (26.99.0000 - M6x16mm or 26.99.0001 - M5x16mm), please order it separately.

- Channel for cable routing of patch cords
- Enables cable routing in the inner cabinet area through oval openings in the cable routing plate
- Color: powder-coated lightgrey / black

26.99.0305

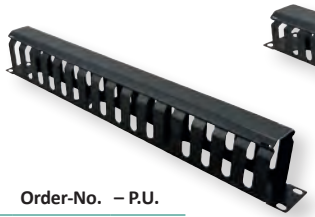

26.99.0304

26.99.0306

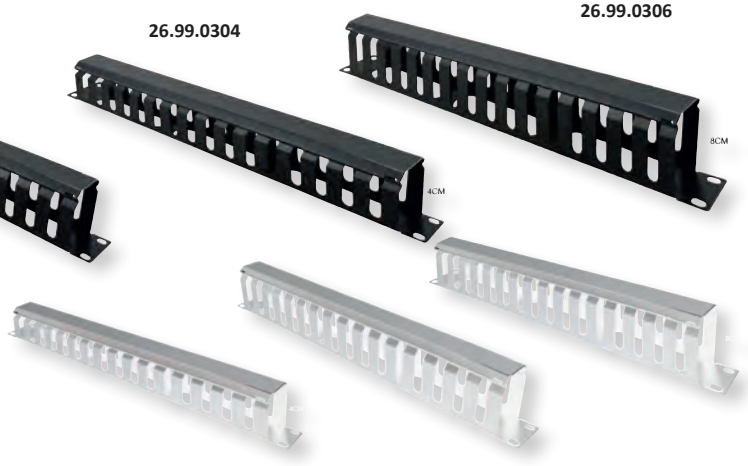

	Order-No.	– P.U.
19“ Front Panel 1U with Patch channel 40 x 40 mm, lightgrey	26.99.0301	– 20
19“ Front Panel 1U with Patch channel 40 x 60 mm, lightgrey	26.99.0302	– 20
19“ Front Panel 1U with Patch channel 40 x 80 mm, lightgrey	26.99.0303	– 20
19“ Front Panel 1U with Patch channel 40 x 40 mm, black	26.99.0304	– 20
19“ Front Panel 1U with Patch channel 40 x 60 mm, black	26.99.0305	– 20
19“ Front Panel 1U with Patch channel 40 x 80 mm, black	26.99.0306	– 20

VALUE 19“ Front Panel 1U with Double-Sided Patch channel

- Creates an organized horizontal pathway for using coax, copper and fiber optic cables
- Mounts easily onto any distribution rack
- Eliminate cable clutter with this versatile cable-management system
- For quick and easy adds and changes in your 19“ cabinet
- Cable guide ensures proper bending radii of patch cables
- After routing the cables or cords, simply snap-on the cover for a clean, professional appearance
- Snap-on covers on both sides- are easy to use and open 180° up or down with adjacent installation
- Material: metal and plastic







	Order-No. – P.U.
VALUE 19“ Front Panel 1U with Double-Sided Patch channel, black	26.99.0321 – 5

19“ 1U Cable Management Plate, C-Type, 5 Hooks

DATA CENTER capable

19“ cable guide 1U, 5 loops, for horizontal or vertical cable routing

- Cable routing for server or data cabinet environments
- Suitable for mounting on all 19“ data racks and server racks so cables can be neatly laid- important for greater reliability of connections throughout the cabinet
- The cable eyelets provide an ideal bending radius for the network cables and help ensure a neat 19-inch cabinet, vertical or horizontal.
- Prevents cable stretching and other equipment from being concealed; also ensures optimum airflow as the cables produce less turbulence due to the optimum mounting
- Makes the installation cleaner and more professional
- 1U quality metal plate
- 5 large „C-type“ cable rings for cable routing
- Contents: 19“-Panel Plate

Note: For the mounting of the 19“ blind plates you need additional mounting material (26.99.0000 - M6x16mm or 26.99.0001 - M5x16mm), please order it separately.

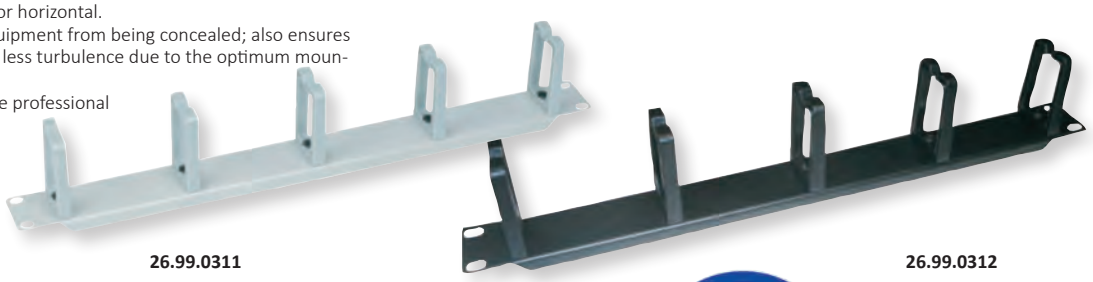

26.99.0311 **26.99.0312**

	Order-No. – P.U.
19“ 1U Cable Management Plate, C-Type, 5 Hooks, lightgrey	26.99.0311 – 20
19“ 1U Cable Management Plate, C-Type, 5 Hooks, black	26.99.0312 – 20

19“ Cable Management plate with Horizontal/Vertical Cable Rings for Cabinets

DATA CENTER capable

- Essential piece of equipment for server or data cabinets environments
- Suitable for mounting on all 19“ data cabinets and server racks, allowing cables to be neatly routed for a higher reliability of connections throughout the cabinet or rack
- The cable rings create an ideal bend radius for the networking cables and greatly assists keeping the rack neat, they can be used vertically or horizontally
- Designed to give extra support for patch leads and prevents obscurring other equipment and to prevent cable strain
- Makes installation neater and more professional
- Cables slide in and out comfortable with out falling out by themselves
- 1UH quality metal bar
- 5 cable rings (hooks) for great cable management
- Contents: 19“-Panel, 5 cable rings (hooks)



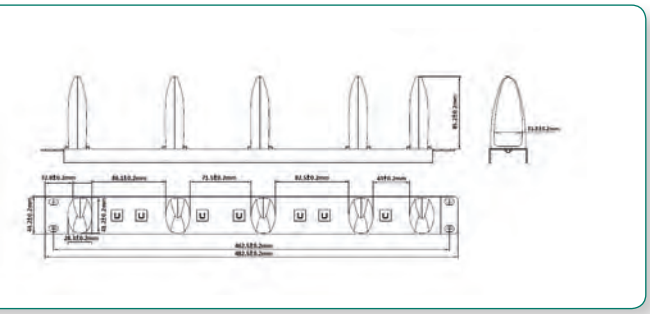

	Order-No. – P.U.
19“ Cable Management plate with Horizontal/Vertical cable rings for Cabinets, grey	26.99.0345 – 20
19“ Cable Management plate with Horizontal/Vertical Cable Rings for Cabinets, black	26.99.0346 – 20

VALUE 19“ 1U Cable Management Plate, G-Type, 5 Hooks

DATA CENTER Product

19“ cable guide 1U, 5 loops, grey, for horizontal or vertical cable routing

- Cable routing for server or data cabinet environments
- Suitable for mounting on all 19“ data racks and server racks so cables can be neatly laid- important for greater reliability of connections throughout the cabinet
- The cable eyelets provide an ideal bending radius for the network cables and help ensure a neat 19-inch cabinet, vertical or horizontal.
- Prevents cable stretching and other equipment from being concealed; also ensures optimum airflow as the cables produce less turbulence due to the optimum mounting
- Makes the installation cleaner and more professional
- 1U quality metal plate
- 5 large „G-type“ cable rings for cable routing
- Contents: 19“-Panel

Note:
For the mounting of the 19“ blind plates you need additional mounting material 26.99.0000 - M6x16mm or 26.99.0001 - M5x16mm), please order it separately.



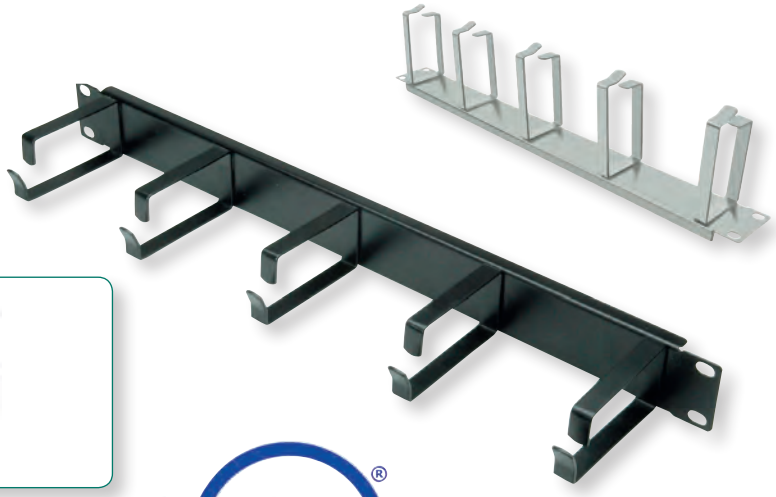

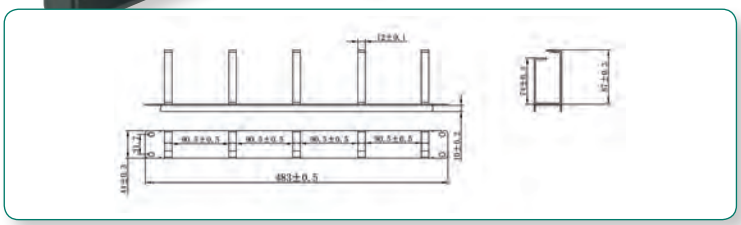

	Order-No. – P.U.
VALUE 19“ 1U Cable Management Plate, G-Type, 5 Hooks, lightgrey	26.99.0308 – 20
VALUE 19“ 1U Cable Management Plate, C-Type, 5 Hooks, black	26.99.0310 – 20

ROLINE 19“ Blank Panel, Snap-in, 1U/2U, Metal

DATA CENTER Product

ROLINE 19“ blind panel painted in light grey to cover unneeded UH - with snap-in mechanism for quick and easy mounting without cage nuts or other accessories.

- Suitable for all 19“ network or server cabinets
- For use in 19“ server cabinets to conceal unneeded installation spaces
- Easy to mount or dismount via snap-in mechanism
- Does not require any tools or cage nut mounting screws
- Snap-in functionality
- Material: Steel
- 19“ blind with one/two height unit (1 or 2UH)
- Paint finish, noir
- Contents: Blind plate



A

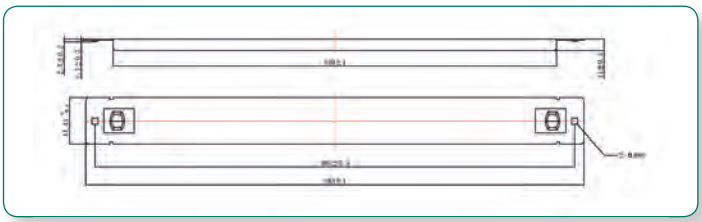

A



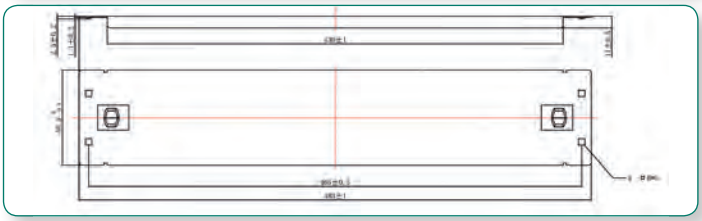

B

B

	Order-No. – P.U.
ROLINE 19“ Blank Panel, Snap-in, 1U, Metal, black	26.30.0000 – 10
ROLINE 19“ Blank Panel, Snap-in, 2U, Metal, black	26.30.0001 – 10

19“ Cable Entry 1U with Brush Seal

DATA CENTER Product

19“ cable guide with bristles, grey metal, for horizontal or vertical cable routing

- Cable routing for server or data cabinet environments
- Suitable for mounting on all 19“ data racks and server racks so cables can be neatly laid- important for greater reliability of connections throughout the cabinet
- Bristled cable routing provides perfect storage for your network cables and helps ensure a neat 19-inch cabinet, vertically or horizontally
- Makes the installation cleaner and more professional
- Quality metal plate
- 19“ cable entry with brush
- Material: steel/plastic
- Dimensions (H x W x D): 44 x 483 x 27 mm / 88 x 483 x 27 mm

A

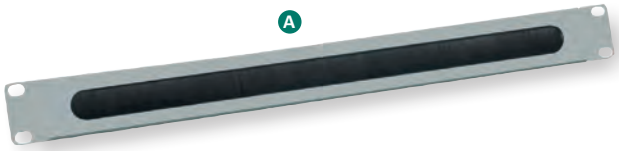

B

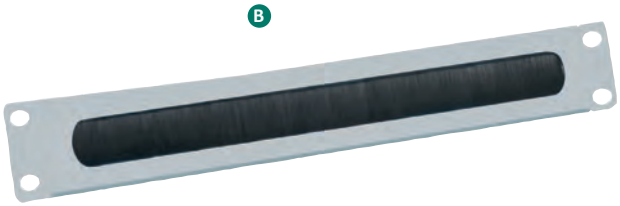

C



D



Note:
For the mounting of the 19“ blind plates you need additional mounting material 26.99.0000 - M6x16mm or 26.99.0001 - M5x16mm), please order it separately.

		Order-No.	– P.U.
19“ Cable Entry 1U with Brush Seal, lightgrey	A	26.99.0313	– 20
19“ Cable Entry 2U with Brush Seal, lightgrey	B	26.99.0314	– 20
19“ Cable Entry 1U with Brush Seal, black	C	26.99.0315	– 20
19“ Cable Entry 2U with Brush Seal, black	D	26.99.0316	– 20

Value®

19“ Blank Panel, 1U / 2U / 3U, Metal

DATA CENTER Product

19“ blind plate coated in (light grey) / (black) to cover not required HU

- For use in 19“ server cabinets to conceal unneeded installation spaces
- 19“ blind with one / two / three height unit (1 / 2 / 3 UH)
- Paint finish, light grey or black
- Contents: Blind plate

A

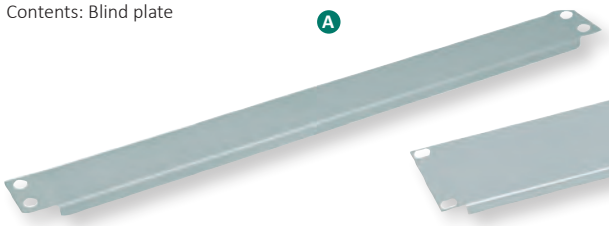

B

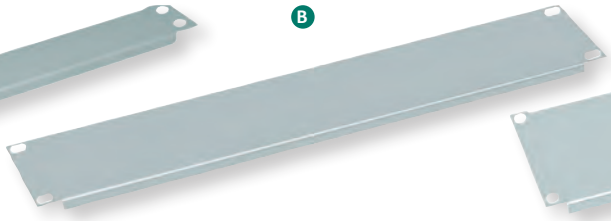

C

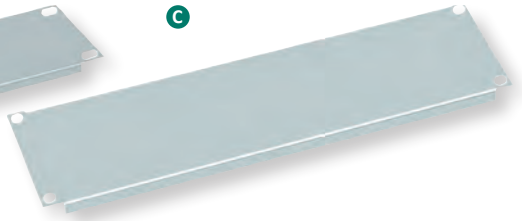

D

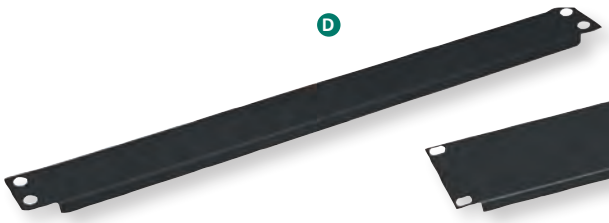

E

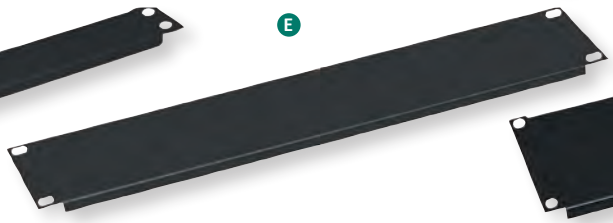

F



		Order-No.	– P.U.
19“ Blank Panel, 1U, Metal, lightgrey	A	26.99.0295	– 10
19“ Blank Panel, 2U, Metal, lightgrey	B	26.99.0296	– 10
19“ Blank Panel, 3U, Metal, lightgrey	C	26.99.0297	– 10
19“ Blank Panel, 1U, Metal, black	D	26.99.0298	– 10
19“ Blank Panel, 2U, Metal, black	E	26.99.0299	– 10
19“ Blank Panel, 3U, Metal, black	F	26.99.0300	– 10

Note:
For the mounting of the 19“ blind plates you need additional mounting material 26.99.0000 - M6x16mm or 26.99.0001 - M5x16mm), please order it separately.

Value®

19” Rack Front Ventilation Panel, 1UH / 2UH, Metal

19“ blind plate coated in black to cover not required HU

- Front ventilation panel designed for use with 19“ rack units / cabinets
- The panel provides more efficient ventilation to the entire rack system
- Covers unused rack space with vertical ventialtion slots
- Height: 1U / 2U
- Length: 483mm (19”)
- Material: Steel
- Color: black
- Contents:Front Ventilation Panel

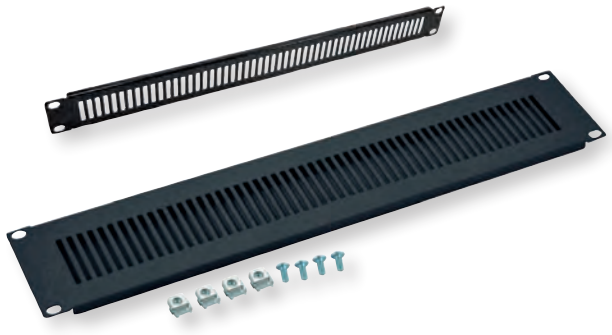

	Order-No. – P.U.
19” Rack Front Ventilation Panel, 1U, Metal, black	26.99.0319 – 10
19” Rack Front Ventilation Panel, 2U, Metal, black	26.99.0320 – 10

VALUE Mounting Material for 19“ Components, M6/M5, 100 pieces / Bag

DATA CENTER Product

19“ mounting material, 100 pieces per set (screw, washer, nut)

- Use a grounding cage nut and a nomel washer at at least one fixing point for standard-compliant grounding
- For attaching front panels, distribution panels or other built-in components to frames, angle profiles or depth struts with rectangular perforations

- Contents:
  100x pan-head screw, M6 x 16, galvanized
  100x plastic disc, black
  100x cage nut M6, galvanized



26.99.0000



26.99.0001

	Order-No. – P.U.
Mounting Material for 19“ Components, **M6**x16mm, 100 pieces	26.99.0000 – 24
Mounting Material for 19“ Components, **M5**x16mm, 100 pieces	26.99.0001 – 24

ROLINE Mounting Material for 19“ Components, M6 / M5, 100 pieces, Black

DATA CENTER Product

19“ mounting material, 100 pieces per set (screw, washer, nut)

- Use a grounding cage nut and a nomel washer at at least one fixing point for standard-compliant grounding
- For attaching front panels, distribution panels or other built-in components to frames, angle profiles or depth struts with rectangular perforations

- Contents:
  100x pan-head screw, M6 / M5 x 16, galvanized, black
  100x plastic disc, black
  100x cage nut M6 / M5, galvanized, black



	Order-No. – P.U.
ROLINE Mounting Material for 19“ Components, M6, 100 pieces	26.50.5005 – 24
ROLINE Mounting material for 19“ components, M5, 100 pieces	26.50.5006 – 24

Cage Nut Insertion Tool, M5 / M6

- Indispensable tool for technicians/engineers wanting to insert or extract cage nuts
- Avoids cut fingers with sharp tools and screwdrivers
- Suitable for hole variants of the M5 /M6 cage nuts
- Easy insertion of the cage nut by placing it into the jaws of the tool, which then squeezes the sides of the cage nut to allow the legs to be easily inserted into the hole
- Easy and reliable assembly
- Reduces a possible damage to panel
- Reduces risk of injury





	Order-No. – P.U.
Cage Nut Insertion Tool, M5 / M6	26.99.0317 – 50



VALUE Fibre Optic Jumper Cables, 50/125µm, OM3

- VALUE Fibre Optic Jumper Cables with OM3 quality for high performance wiring
- Duplex Cable with fibre type Muliti-mode 50/125µm, OM3
- Availiable length: 0,5m, 1m, 2m, 3m, 5m, 10m, 15m and 20m
- Color: turquoise

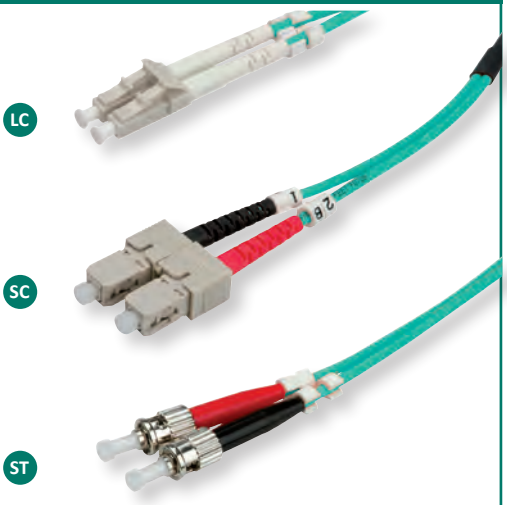

Length	Type LC/LC	– P.U.	Type LC/ST	– P.U.	Type LC/SC	– P.U.
0.5 m	21.99.8700	– 10	21.99.8720	– 10	21.99.8710	– 10
1 m	21.99.8701	– 10	21.99.8721	– 10	21.99.8711	– 10
2 m	21.99.8702	– 10	21.99.8722	– 10	21.99.8712	– 10
3 m	21.99.8703	– 5	21.99.8723	– 5	21.99.8713	– 5
5 m	21.99.8705	– 5	21.99.8725	– 5	21.99.8715	– 5
10 m	21.99.8708	– 10	21.99.8728	– 10	21.99.8718	– 10
15 m	21.99.8706	– 5				
20 m	21.99.8707	– 5				

VALUE FO Jumper Cable 50/125µm OM3, LC/LC, Low-Loss-Connector

VALUE Fiber-Patchcable in OM3 quality for a high performance fiber optical cabling

- Security for the future! The OM3 fiber and connector quality with very low insertion loss ensure an excellent quality at very high bandwidths.
- The cable assembled with „low-loss“ connectors achieve very good values for insertion loss and reflection. In comparison:

- Typical attenuation of a standard LC connector: 0.5 dB
- Typical attenuation of a low-loss LC connector: 0.15 dB

- Duplex cables with fiber type Multi-mode 50/125µm, OM3
- Color: turquoise

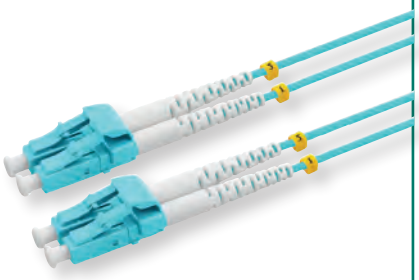

	Order-No.	– P.U.
VALUE FO Jumper Cable 50/125µm OM3, LC/LC, Low-Loss-Connector, turquoise, 0.5 m	21.99.8820	– 5
VALUE FO Jumper Cable 50/125µm OM3, LC/LC, Low-Loss-Connector, turquoise, 1 m	21.99.8821	– 5
VALUE FO Jumper Cable 50/125µm OM3, LC/LC, Low-Loss-Connector, turquoise, 2 m	21.99.8822	– 5
VALUE FO Jumper Cable 50/125µm OM3, LC/LC, Low-Loss-Connector, turquoise, 3 m	21.99.8823	– 5
VALUE FO Jumper Cable 50/125µm OM3, LC/LC, Low-Loss-Connector, turquoise, 5 m	21.99.8824	– 5
VALUE FO Jumper Cable 50/125µm OM3, LC/LC, Low-Loss-Connector, turquoise, 10 m	21.99.8825	– 5
VALUE FO Jumper Cable 50/125µm OM3, LC/LC, Low-Loss-Connector, turquoise, 15 m	21.99.8826	– 5
VALUE FO Jumper Cable 50/125µm OM3, LC/LC, Low-Loss-Connector, turquoise, 20 m	21.99.8827	– 5

ROLINE Fibre Optic Jumper Cables, 50/125µm, OM3

- ROLINE Fibre Optic Jumper Cables with OM3 quality for high performance wiring
- The quality of the connectors and fibres and an optimal assembly procedure lead to extremely good characteristics in respect of insertion loss and reflection
- Compact conductor (fibre movable in secondary coating)
- Duplex Cable with fibre type Muliti-mode 50/125µm, OM3
- Cable construction: Kevlar tension reduction, PVC outer coating, Ø 2.8 x 6 mm
- Color: turquoise

Designed for Professionals

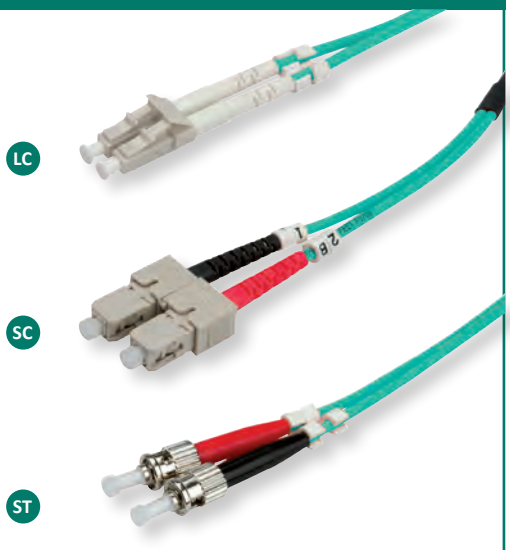

Length	Type LC/LC	– P.U.	Type LC/ST	– P.U.	Type LC/SC	– P.U.
0.5 m	21.15.8700	– 10	21.15.8720	– 10	21.15.8710	– 10
1 m	21.15.8701	– 10	21.15.8721	– 10	21.15.8711	– 10
2 m	21.15.8702	– 10	21.15.8722	– 10	21.15.8712	– 10
3 m	21.15.8703	– 5	21.15.8723	– 5	21.15.8713	– 5
5 m	21.15.8705	– 5	21.15.8725	– 5	21.15.8715	– 5
10 m	21.15.8708	– 10	21.15.8728	– 10	21.15.8718	– 10
15 m	21.15.8706	– 5				
20 m	21.15.8707	– 5				

ROLINE Fibre Optic Jumper Cables, 50/125µm, OM3, LC/LC, Low-Loss-Connector

- Security for the future! The OM3 fiber and connector quality with very low insertion loss ensure an excellent quality at very high bandwidths.
- Material and assembly in ROLINE quality
- The cable assembled with „low-loss“ connectors achieve very good values for insertion loss and reflection. In comparison:
  - Typical attenuation of a standard LC connector: 0.5 dB
  - Typical attenuation of a low-loss LC connector: 0.15 dB
- Duplex cables with fiber type Multi-mode 50/125µm, OM3
- Color: turquoise

roline® Designed for Professionals

	Order-No.	– P.U.
ROLINE FO Jumper Cable 50/125µm OM3, LC/LC, Low-Loss-Connector, turquoise, 0.5 m	21.15.8820	– 5
ROLINE FO Jumper Cable 50/125µm OM3, LC/LC, Low-Loss-Connector, turquoise, 1.0 m	21.15.8821	– 5
ROLINE FO Jumper Cable 50/125µm OM3, LC/LC, Low-Loss-Connector, turquoise, 2.0 m	21.15.8822	– 5
ROLINE FO Jumper Cable 50/125µm OM3, LC/LC, Low-Loss-Connector, turquoise, 3.0 m	21.15.8823	– 5
ROLINE FO Jumper Cable 50/125µm OM3, LC/LC, Low-Loss-Connector, turquoise, 5.0 m	21.15.8825	– 5
ROLINE FO Jumper Cable 50/125µm OM3, LC/LC, Low-Loss-Connector, turquoise, 10 m	21.15.8828	– 5
ROLINE FO Jumper Cable 50/125µm OM3, LC/LC, Low-Loss-Connector, turquoise, 15 m	21.15.8829	– 5
ROLINE FO Jumper Cable 50/125µm OM3, LC/LC, Low-Loss-Connector, turquoise, 20 m	21.15.8830	– 5



VALUE Fibre Optic Jumper Cables, 50/125 µm, OM4

OM4 fiber for existing 1 and 10 Gbit/s applications as well as future 40 and 100 Gbit/s systems. Allows extended reach upwards of 550 meters at 10 Gbit/s for ultra long building backbones and medium length campus backbones. With an laser bandwidth of 4700 MHz– km (more than double the IEEE requirement for 10 Gbit/s 300 meter support), the OM4 fiber is also especially well suited for shorter distances in data centers and high performance computing applications.

- VALUE OM4 Fibre Optic Jumper cable with fiber type 50/125 µm
- Color: purple

Length	Type LC/LC	– P.U.	Type LC/ST	– P.U.	Type LC/SC	– P.U.
0.5 m	21.99.8750	– 10	21.99.8770	– 10	21.99.8760	– 10
1 m	21.99.8751	– 10	21.99.8771	– 10	21.99.8761	– 10
2 m	21.99.8752	– 10	21.99.8772	– 10	21.99.8762	– 10
3 m	21.99.8753	– 5	21.99.8773	– 5	21.99.8763	– 5
5 m	21.99.8755	– 5	21.99.8775	– 5	21.99.8765	– 5
7 m	21.99.8754	– 3				
10 m	21.99.8758	– 5	21.99.8778	– 5	21.99.8768	– 5
15 m	21.99.8756	– 5				
20 m	21.99.8757	– 5				

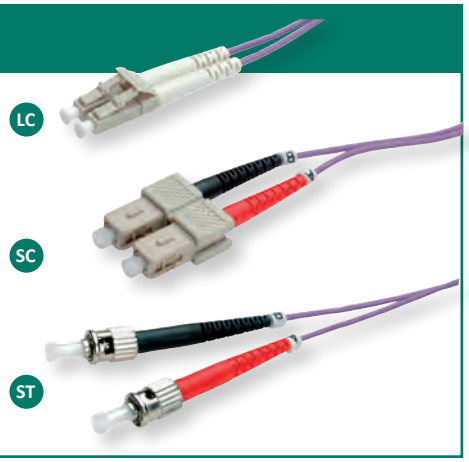

VALUE Fibre Optic Jumper Cables, 50/125µm, OM4, LC/LC, Low-Loss-Connector

VALUE F.O. Patchcable in OM4-Quality for a high performance connection.

- Security for the future! The OM4 fiber and connector quality with very low insertion ensure an excellent quality at very high bandwidths.
- It supports 10 Gb/s Ethernet, Fibre Channel, and OIF applications to 550 meters, extends the system cost benefits to ultra long building backbones and medium length campus backbones.
- The cable assembled with „low-loss“ connectors achieve very good values for insertion loss and reflection. In comparison:
  - Typical attenuation of a standard LC connector: 0.5 dB
  - Typical attenuation of a low-loss LC connector: 0.15 dB
- Modal Bandwidth: 4700 MHz-km (this bandwidth is based on application-specific implementation of the EMBC requirements)
- Duplex cables with fiber type Multi-mode 50/125µm, OM4

	Order-No.	– P.U.
VALUE FO Jumper Cable 50/125µm OM4, LC/LC, Low-Loss-Connector, violet, 0.5 m	21.99.8830	– 5
VALUE FO Jumper Cable 50/125µm OM4, LC/LC, Low-Loss-Connector, violet, 1 m	21.99.8831	– 5
VALUE FO Jumper Cable 50/125µm OM4, LC/LC, Low-Loss-Connector, violet, 2 m	21.99.8832	– 5
VALUE FO Jumper Cable 50/125µm OM4, LC/LC, Low-Loss-Connector, violet, 3 m	21.99.8833	– 5
VALUE FO Jumper Cable 50/125µm OM4, LC/LC, Low-Loss-Connector, violet, 5 m	21.99.8834	– 5
VALUE FO Jumper Cable 50/125µm OM4, LC/LC, Low-Loss-Connector, violet, 7 m	21.99.8838	– 5
VALUE FO Jumper Cable 50/125µm OM4, LC/LC, Low-Loss-Connector, violet, 10 m	21.99.8835	– 5
VALUE FO Jumper Cable 50/125µm OM4, LC/LC, Low-Loss-Connector, violet, 15 m	21.99.8836	– 5
VALUE FO Jumper Cable 50/125µm OM4, LC/LC, Low-Loss-Connector, violet, 20 m	21.99.8837	– 5

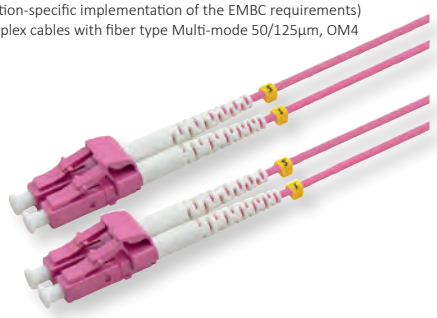

ROLINE Fibre Optic Jumper Cables, 50/125 µm, OM4

OM4 fiber for existing 1 and 10 Gbit/s applications as well as future 40 and 100 Gbit/s systems. Allows extended reach upwards of 550 meters at 10 Gbit/s for ultra long building backbones and medium length campus backbones. With an laser bandwidth of 4700 MHz– km (more than double the IEEE requirement for 10 Gbit/s 300 meter support), the OM4 fiber is also especially well suited for shorter distances in data centers and high performance computing applications.

- ROLINE OM4 Fibre Optic Jumper cable with fiber type 50/125 µm
- Color: purple

Length	Type LC/LC	– P.U.	Type LC/ST	– P.U.	Type LC/SC	– P.U.
0.5 m	21.15.8750	– 10	21.15.8770	– 10	21.15.8760	– 10
1 m	21.15.8751	– 10	21.15.8771	– 10	21.15.8761	– 10
2 m	21.15.8752	– 10	21.15.8772	– 10	21.15.8762	– 10
3 m	21.15.8753	– 5	21.15.8773	– 5	21.15.8763	– 5
5 m	21.15.8755	– 5	21.15.8775	– 5	21.15.8765	– 5
7 m	21.15.8754	– 5				
10 m	21.15.8758	– 5	21.15.8778	– 5	21.15.8768	– 5
15 m	21.15.8756	– 5				
20 m	21.15.8757	– 5				

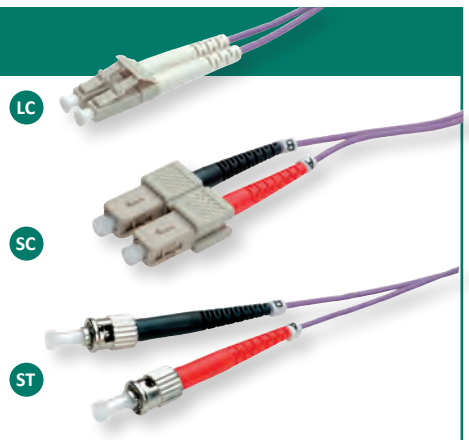

ROLINE Fibre Optic Jumper Cables, 50/125µm OM4, Low-Loss-Connector

Security for the future! The OM4 fiber and connector quality with very low insertion ensure an excellent quality at very high bandwidths.
- It supports 10 Gb/s Ethernet, Fibre Channel, and OIF applications to 550 meters, extends the system cost benefits to ultra long building backbones and medium length campus backbones.
- The cable assembled with „low– loss" connectors achieve very good values for insertion loss and reflection. In comparison:
  – Typical attenuation of a standard LC connector: 0.5 dB
  – Typical attenuation of a low– loss LC connector: 0.15 dB
- Modal Bandwidth: 4700 MHz– km (this bandwidth is based on application– specific implementation of the EMBC requirements)
- Duplex cables with fiber type Multi– mode 50/125µm, OM4



	Order-No.	– P.U.
ROLINE FO Jumper Cable 50/125µm OM4, LC/LC, Low–Loss–Connector, violet, 0.5 m	21.15.8850	– 3
ROLINE FO Jumper Cable 50/125µm OM4, LC/LC, Low–Loss–Connector, violet, 1.0 m	21.15.8851	– 3
ROLINE FO Jumper Cable 50/125µm OM4, LC/LC, Low–Loss–Connector, violet, 2.0 m	21.15.8852	– 3
ROLINE FO Jumper Cable 50/125µm OM4, LC/LC, Low–Loss–Connector, violet, 3.0 m	21.15.8853	– 3
ROLINE FO Jumper Cable 50/125µm OM4, LC/LC, Low–Loss–Connector, violet, 5.0 m	21.15.8855	– 3
ROLINE FO Jumper Cable 50/125µm OM4, LC/LC, Low–Loss–Connector, violet, 7.0 m	21.15.8856	– 3
ROLINE FO Jumper Cable 50/125µm OM4, LC/LC, Low–Loss–Connector, violet, 10 m	21.15.8858	– 3
ROLINE FO Jumper Cable 50/125µm OM4, LC/LC, Low–Loss–Connector, violet, 15 m	21.15.8859	– 5
ROLINE FO Jumper Cable 50/125µm OM4, LC/LC, Low–Loss–Connector, violet, 20 m	21.15.8860	– 5

roline® Designed for Professionals

Halogenfree Flame retardant Low Smoke

ROLINE Fibre Optic Jumper Cables, 50/125µm OM4, Low-Loss-Connector, for Data Center

DATA CENTER capable

This fibre optice cable with the new connector significantly reduces the amount of space needed in rack, helping to control costs and improve efficiency
- To double the density of fibers per rack and improve handling in Central Offices and Data Centres
- The new connector significantly reduces the amount of space needed, helping to control costs and improve efficiency.
- For a more efficient handling the connector of the fibre optic cable is equipped with a rigid, extended lever that employs an new way of push/pull mechanism
- For both installation and for ongoing handling, vertical space and finger access at the connection are needed
- The OM4 fiber and connector quality ensures an excellent quality at very high bandwidths.
- Color: purple

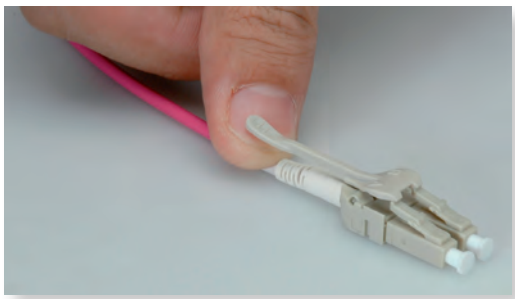

	Order-No.	– P.U.
ROLINE FO Jumper Cable 50/125µm OM4, LC/LC, Low-Loss-Connector, 0.5 m	21.15.8870	– 5
ROLINE FO Jumper Cable 50/125µm OM4, LC/LC, Low-Loss-Connector, 1.0 m	21.15.8871	– 5
ROLINE FO Jumper Cable 50/125µm OM4, LC/LC, Low-Loss-Connector, 2.0 m	21.15.8872	– 5
ROLINE FO Jumper Cable 50/125µm OM4, LC/LC, Low-Loss-Connector, 3.0 m	21.15.8873	– 5
ROLINE FO Jumper Cable 50/125µm OM4, LC/LC, Low-Loss-Connector, 5.0 m	21.15.8875	– 5
ROLINE FO Jumper Cable 50/125µm OM4, LC/LC, Low-Loss-Connector, 7.0 m	21.15.8876	– 3
ROLINE FO Jumper Cable 50/125µm OM4, LC/LC, Low-Loss-Connector, 10 m	21.15.8880	– 5
ROLINE FO Jumper Cable 50/125µm OM4, LC/LC, Low-Loss-Connector, 15 m	21.15.8885	– 5
ROLINE FO Jumper Cable 50/125µm OM4, LC/LC, Low-Loss-Connector, 20 m	21.15.8890	– 5

roline® Designed for Professionals

Halogenfree Flame retardant Low Smoke

ROLINE Fibre Optic SLIM Jumper Cables, 50/125µm OM4, LC/LC, OD 1.2mm

The solution for space problems in the fiber optic area of your data center!
Extra-thin ROLINE fiber optic patch cables in OM4 quality for high-performance fiber optic cabling in high-density environments.
The LC connector with its small cross-section allows high densities in the distribution area. And thanks to the extra-thin cable with a straight 1.2mm diameter, we now also have the appropriate supplement to this connector.

- Security for the future! The OM4 fiber and connector quality with very low insertion ensure an excellent quality at very high bandwidths of up to 10 Gb/s Ethernet, Fibre Channel, and OIF applications to 550 meters- extends the system cost benefits to ultra long building backbones and medium length campus backbones.
- Material and clothing in ROLINE quality
- Outer diameter: 1.2 x 2.4mm
- UPC polish
- Modal Bandwidth: 4700 MHz-km (this bandwidth is based on application-specific implementation of the EMBC requirements)
- Duplex cables with fiber type Multi-mode 50/125µm, OM4

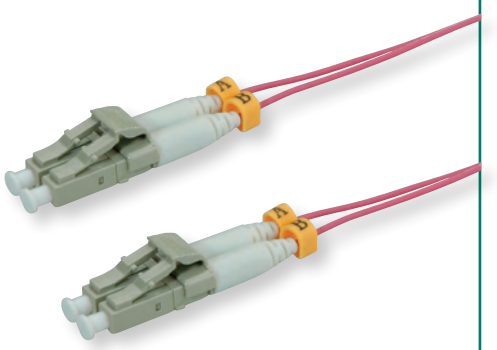

	Order-No.	– P.U.
ROLINE FO SLIM Jumper Cable 50/125µm OM4, LC/LC, OD 1.2mm, violet, 1.0 m	21.15.9261	– 10
ROLINE FO SLIM Jumper Cable 50/125µm OM4, LC/LC, OD 1.2mm, violet, 2.0 m	21.15.9262	– 10
ROLINE FO SLIM Jumper Cable 50/125µm OM4, LC/LC, OD 1.2mm, violet, 3.0 m	21.15.9263	– 10
ROLINE FO SLIM Jumper Cable 50/125µm OM4, LC/LC, OD 1.2mm, violet, 5.0 m	21.15.9264	– 5
ROLINE FO SLIM Jumper Cable 50/125µm OM4, LC/LC, OD 1.2mm, violet, 7.0 m	21.15.9266	– 5
ROLINE FO SLIM Jumper Cable 50/125µm OM4, LC/LC, OD 1.2mm, violet, 10.0 m	21.15.9265	– 5

roline® Designed for Professionals

Halogenfree Flame retardant Low Smoke

ROLINE Fibre Optic Jumper Cable, 50/125 µm, OM5, LC/LC

ROLINE fiber optic patch cables in OM5 quality for high-performance fiber optic cabling in high-density environments.

- Security for the future! The OM5 fiber connector quality with very low insertion ensures an excellent quality at very high bandwidths of up to 100 Gbit/s Ethernet, Fibre Channel, and OIF applications with up to 150 meters- extends the system cost benefits to ultra long building backbones and medium length campus backbones.
- Material and clothing in ROLINE quality
- Duplex cables with fiber type Multimode 50/125µm, OM5
- Attenuation 850nm ≤ 2.3 dB/km, 953nm ≤ 1.7 dB/km, 1300nm ≤ 0.6 dB/km
- The cable assembled with „low-loss“ connectors achieve very good values for insertion loss and reflection. Insertion loss of less than 0.3dB
- Outer diameter: 2.0mm
- UPC polish
- Modal Bandwidth: 4700 MHz-km (this bandwidth is based on application-specific implementation of the EMBC requirements)

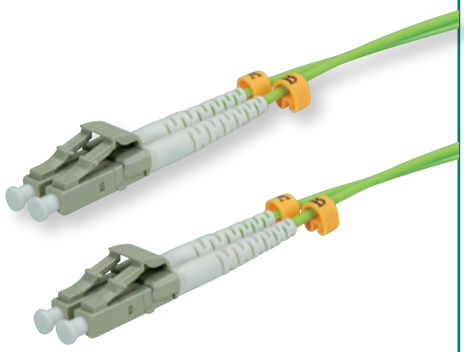

	Order-No.	– P.U.
ROLINE Fibre Optic Jumper Cable, 50/125 µm, LC/LC, OM5, green, 1.0 m	21.15.9271	– 10
ROLINE Fibre Optic Jumper Cable, 50/125 µm, LC/LC, OM5, green, 2.0 m	21.15.9272	– 10
ROLINE Fibre Optic Jumper Cable, 50/125 µm, LC/LC, OM5, green, 3.0 m	21.15.9273	– 10
ROLINE Fibre Optic Jumper Cable, 50/125 µm, LC/LC, OM5, green, 5.0 m	21.15.9274	– 5
ROLINE Fibre Optic Jumper Cable, 50/125 µm, LC/LC, OM5, green, 7.0 m	21.15.9276	– 5
ROLINE Fibre Optic Jumper Cable, 50/125 µm, LC/LC, OM5, green, 10.0 m	21.15.9275	– 5

roline® Designed for Professionals

Halogenfree Flame retardant Low Smoke

ROLINE Fibre Optic Jumper CableS, 9/125µm, OS2, LC/SC, Duplex, LSOH

ROLINE LSOH fiber optic patch cable with single mode fibers in OS2 quality.

- Cable sheathing made of halogen-free, low smoke and flame-retardant material
- Assembled with high-quality connectors with ceramic ferrule
- Core structure: Duplex cable I-VH
- High tensile strength due to Kevlar with aramid fibres

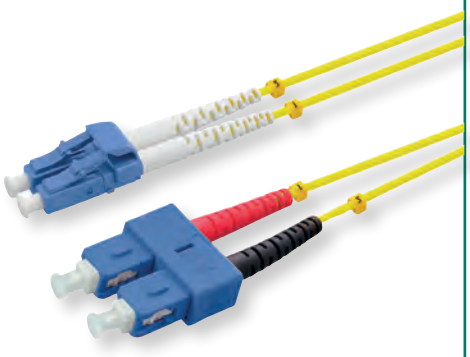

	Order-No.	– P.U.
ROLINE Fibre Optic Jumper Cable, 9/125µm, OS2, LC/SC, Duplex, yellow, 0.5 m	21.15.8790	– 10
ROLINE Fibre Optic Jumper Cable, 9/125µm, OS2, LC/SC, Duplex, yellow, 1 m	21.15.8791	– 10
ROLINE Fibre Optic Jumper Cable, 9/125µm, OS2, LC/SC, Duplex, yellow, 2 m	21.15.8792	– 10
ROLINE Fibre Optic Jumper Cable, 9/125µm, OS2, LC/SC, Duplex, yellow, 3 m	21.15.8793	– 5
ROLINE Fibre Optic Jumper Cable, 9/125µm, OS2, LC/SC, Duplex, yellow, 5 m	21.15.8794	– 5

roline® Designed for Professionals

Halogenfree Flame retardant Low Smoke

ROLINE Fibre Optic Jumper Cables, 9/125µm, OS2, LC/LC, Duplex, LSOH

ROLINE LSOH fiber optic patch cable with single mode fibers in OS2 quality.

- Cable sheathing made of halogen-free, low smoke and flame-retardant material
- Assembled with high-quality connectors with ceramic ferrule
- Core structure: Duplex cable I-VH
- High tensile strength due to Kevlar with aramid fibres

Halogen-free, flame retardant, low smoke.

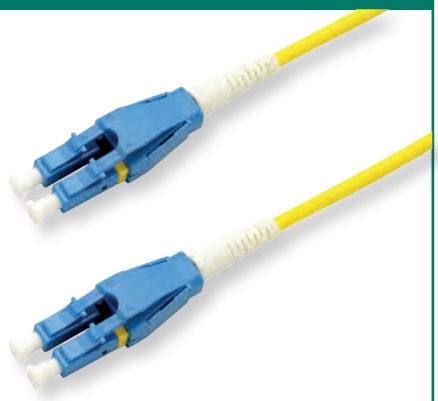

	Order-No.	– P.U.
ROLINE FO Jumper Cable duplex, 9/125µm, OS2, LC/LC, duplex, yellow, 0.5 m	21.15.8780	– 10
ROLINE FO Jumper Cable duplex, 9/125µm, OS2, LC/LC, duplex, yellow, 1.0 m	21.15.8781	– 10
ROLINE FO Jumper Cable duplex, 9/125µm, OS2, LC/LC, duplex, yellow, 2.0 m	21.15.8782	– 10
ROLINE FO Jumper Cable duplex, 9/125µm, OS2, LC/LC, duplex, yellow, 3.0 m	21.15.8783	– 5
ROLINE FO Jumper Cable duplex, 9/125µm, OS2, LC/LC, duplex, yellow, 5.0 m	21.15.8785	– 5
ROLINE FO Jumper Cable duplex, 9/125µm, OS2, LC/LC, duplex, yellow, 7.0 m	21.15.8784	– 5
ROLINE FO Jumper Cable duplex, 9/125µm, OS2, LC/LC, duplex, yellow, 10.0 m	21.15.8789	– 5
ROLINE FO Jumper Cable duplex, 9/125µm, OS2, LC/LC, duplex, yellow, 15.0 m	21.15.8786	– 5
ROLINE FO Jumper Cable duplex, 9/125µm, OS2, LC/LC, duplex, yellow, 20.0 m	21.15.8787	– 5

roline® Designed for Professionals

Halogenfree Flame retardant Low Smoke

ROLINE Fibre Optic Jumper Cables, 9/125µm, OS2, LC/LC, UPC Polish, Simplex, LSOH

ROLINE LSOH fiber optic patch cable with single mode fibers in OS2 quality.
- Connects optical fibre socket to switch/router/internet box
- Suitable for high-speed Internet
- Fiber optic patch cable simplex with single mode fibers in OS2 quality

Halogen-free, flame retardant, low smoke.

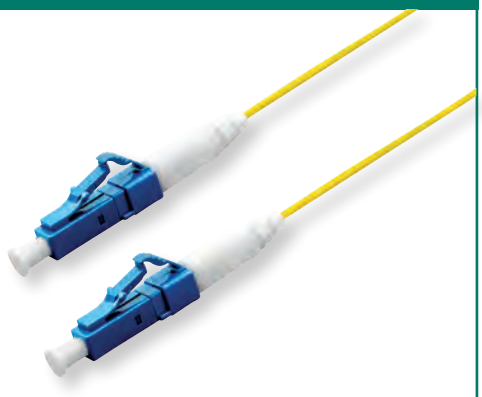

	Order-No. – P.U.
ROLINE FO Jumper Cable 9/125µm, OS2, LC/LC, UPC, simplex, LSOH, yellow, 0.5 m	21.15.8840 – 10
ROLINE FO Jumper Cable 9/125µm, OS2, LC/LC, UPC, simplex, LSOH, yellow, 1.0 m	21.15.8841 – 10
ROLINE FO Jumper Cable 9/125µm, OS2, LC/LC, UPC, simplex, LSOH, yellow, 2.0 m	21.15.8842 – 10
ROLINE FO Jumper Cable 9/125µm, OS2, LC/LC, UPC, simplex, LSOH, yellow, 3.0 m	21.15.8843 – 5
ROLINE FO Jumper Cable 9/125µm, OS2, LC/LC, UPC, simplex, LSOH, yellow, 5.0 m	21.15.8845 – 5
ROLINE FO Jumper Cable 9/125µm, OS2, LC/LC, UPC, simplex, LSOH, yellow, 7.0 m	21.15.8846 – 5
ROLINE FO Jumper Cable 9/125µm, OS2, LC/LC, UPC, simplex, LSOH, yellow, 10.0 m	21.15.8847 – 5

roline® Designed for Professionals

Halogenfree Flame retardant Low Smoke

ROLINE Fibre Optic Jumper Cables, 50/125µm OM4, LSH/LC, UPC Polish, LSOH

High-quality fibre optic cables with the high protective, secured LSH connection on one side and LC plug on the other side - both connections are UPC polished.
- Duplex cable with 50/125µm OM4 fibre type
- Cable material: sheath halogen-free and flame-retardant, violet
- LC connector: plug with high mechanical load capacity, push-pull latched with anti-rotation device, ceramic ferrule
- LSH connector: precisely manufactured connector with low return loss, ceramic ferrule
- UPC Polish (Ultra Physical Contact)
- IL < 0.25dB, RL > 25dB
- IL (typical) < 0.12dB
- Cable OD (outer diameter): 3.0 x 6.0mm

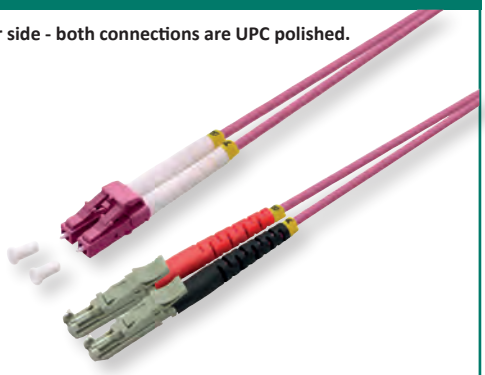

	Order-No. – P.U.
ROLINE FO Jumper Cable 50/125µm OM4, LSH/LC, UPC Polish, LSOH, violet, 0.5 m	21.15.9470 – 10
ROLINE FO Jumper Cable 50/125µm OM4, LSH/LC, UPC Polish, LSOH, violet, 1.0 m	21.15.9471 – 10
ROLINE FO Jumper Cable 50/125µm OM4, LSH/LC, UPC Polish, LSOH, violet, 2.0 m	21.15.9472 – 10
ROLINE FO Jumper Cable 50/125µm OM4, LSH/LC, UPC Polish, LSOH, violet, 3.0 m	21.15.9473 – 5
ROLINE FO Jumper Cable 50/125µm OM4, LSH/LC, UPC Polish, LSOH, violet, 5.0 m	21.15.9475 – 5
ROLINE FO Jumper Cable 50/125µm OM4, LSH/LC, UPC Polish, LSOH, violet, 7.5 m	21.15.9476 – 5
ROLINE FO Jumper Cable 50/125µm OM4, LSH/LC, UPC Polish, LSOH, violet, 10.0 m	21.15.9477 – 5

roline® Designed for Professionals

Halogenfree Flame retardant Low Smoke

ROLINE Fibre Optic Jumper Cables Duplex, 50/125µm OM4, LSH/LSH, UPC Polish, LSOH

High-quality fibre optic cable with the high protective, secured LSH connection on both sides - both connections are UPC polished.
- Duplex cable with 50/125µm OM4 fibre type
- Cable material: sheath halogen-free and flame-retardant, violet, solid core with aramid strain relief
- LSH connector: precisely manufactured connector with low return loss, ceramic ferrule, beige
- The LSH connector has a spring-loaded shutter, which fully protects the ferrule from dust and scratches
- UPC Polish (Ultra Physical Contact)
- IL < 0.25dB, RL > 25dB
- IL (typical) < 0.12dB
- Cable OD (outer diameter): 3.0 x 6.0mm



	Order-No. – P.U.
ROLINE FO Jumper Cable Duplex, 50/125µm OM4, LSH/LSH, UPC Polish, LSOH, violet, 0.5 m	21.15.9490 – 10
ROLINE FO Jumper Cable Duplex, 50/125µm OM4, LSH/LSH, UPC Polish, LSOH, violet, 1.0 m	21.15.9491 – 10
ROLINE FO Jumper Cable Duplex, 50/125µm OM4, LSH/LSH, UPC Polish, LSOH, violet, 2.0 m	21.15.9492 – 10
ROLINE FO Jumper Cable Duplex, 50/125µm OM4, LSH/LSH, UPC Polish, LSOH, violet, 3.0 m	21.15.9493 – 5
ROLINE FO Jumper Cable Duplex, 50/125µm OM4, LSH/LSH, UPC Polish, LSOH, violet, 5.0 m	21.15.9495 – 5
ROLINE FO Jumper Cable Duplex, 50/125µm OM4, LSH/LSH, UPC Polish, LSOH, violet, 7.5 m	21.15.9496 – 5
ROLINE FO Jumper Cable Duplex, 50/125µm OM4, LSH/LSH, UPC Polish, LSOH, violet, 10.0 m	21.15.9497 – 5

roline® Designed for Professionals

Halogenfree Flame retardant Low Smoke

ROLINE Fibre Optic Jumper Cable Duplex, 9/125µm, OS2, LSH/LC, APC Polish, LSOH

High-quality fibre optic cable with the high protective, secured LSH connection on one side and LC plug on the other side - both connections are APC polished.
- Duplex cable with fiber type 9/125µm OS2
- Cable material: sheath halogen-free and flame-retardant, yellow, solid core with aramid strain relief
- LC connector: connector with high mechanical load capacity, push-pull latched with anti-rotation lock, APC ground joint, ceramic ferrule
- LSH connector: precision-manufactured connectors with low return loss (RL), APC ground joint, ceramic ferrule, green
- The LSH connector has a spring-loaded shutter, which fully protects the ferrule from dust and scratches
- APC Polish (8°- APC- Angled Physical Contact- allows tighter connection and smaller end-face radii)
- IL < 0.25dB, RL > 60dB
- IL (typical) < 0.12dB
- Cable OD (outer diameter): 3.0 x 6.0mm



roline® Designed for Professionals

Halogenfree Flame retardant Low Smoke

	Order-No.	– P.U.
ROLINE FO Jumper Cable Duplex, 9/125µm, OS2, LSH/LC, APC Polish, LSOH, yellow, 0.5 m	21.15.9480	– 10
ROLINE FO Jumper Cable Duplex, 9/125µm, OS2, LSH/LC, APC Polish, LSOH, yellow, 1.0 m	21.15.9481	– 10
ROLINE FO Jumper Cable Duplex, 9/125µm, OS2, LSH/LC, APC Polish, LSOH, yellow, 2.0 m	21.15.9482	– 10
ROLINE FO Jumper Cable Duplex, 9/125µm, OS2, LSH/LC, APC Polish, LSOH, yellow, 3.0 m	21.15.9483	– 5
ROLINE FO Jumper Cable Duplex, 9/125µm, OS2, LSH/LC, APC Polish, LSOH, yellow, 5.0 m	21.15.9485	– 5
ROLINE FO Jumper Cable Duplex, 9/125µm, OS2, LSH/LC, APC Polish, LSOH, yellow, 7.5 m	21.15.9486	– 5
ROLINE FO Jumper Cable Duplex, 9/125µm, OS2, LSH/LC, APC Polish, LSOH, yellow, 10.0 m	21.15.9487	– 5

ROLINE Fibre Optic Jumper Cable Duplex, 9/125µm, OS2, LSH/LSH, APC Polish, LSOH

High-quality fibre optic cable with the high protective, secured LSH connection on both sides - both connections are APC polished.
- Duplex cable with fiber type 9/125µm OS2
- Cable material: sheath halogen-free and flame-retardant, yellow, solid core with aramid strain relief
- LSH connectors: precision-manufactured connectors with low return loss, APC ground joint, ceramic ferrule
- The LSH connector has a spring-loaded shutter, which fully protects the ferrule from dust and scratches
- APC Polish (8°- APC- Angled Physical Contact- allows tighter connection and smaller end-face radii)
- IL < 0.25dB, RL > 60dB
- IL (typical) < 0.12dB
- Cable OD (outer diameter): 3.0 x 6.0mm



roline® Designed for Professionals

Halogenfree Flame retardant Low Smoke

	Order-No.	– P.U.
ROLINE FO Jumper Cable Duplex, 9/125µm, OS2, LSH/LSH, APC Polish, LSOH, yellow, 0.5 m	21.15.9500	– 10
ROLINE FO Jumper Cable Duplex, 9/125µm, OS2, LSH/LSH, APC Polish, LSOH, yellow, 1.0 m	21.15.9501	– 10
ROLINE FO Jumper Cable Duplex, 9/125µm, OS2, LSH/LSH, APC Polish, LSOH, yellow, 2.0 m	21.15.9502	– 10
ROLINE FO Jumper Cable Duplex, 9/125µm, OS2, LSH/LSH, APC Polish, LSOH, yellow, 3.0 m	21.15.9503	– 5
ROLINE FO Jumper Cable Duplex, 9/125µm, OS2, LSH/LSH, APC Polish, LSOH, yellow, 5.0 m	21.15.9505	– 5
ROLINE FO Jumper Cable Duplex, 9/125µm, OS2, LSH/LSH, APC Polish, LSOH, yellow, 7.5 m	21.15.9506	– 5
ROLINE FO Jumper Cable Duplex, 9/125µm, OS2, LSH/LSH, APC Polish, LSOH, yellow, 10.0 m	21.15.9507	– 5

ROLINE Fibre Optic Jumper Cable LSH Duplex, 9/125µm, OS2, LSH APC / LC UPC, LSOH

High-quality fibre optic cable with the high protective, secured APC polished LSH connection on one side and UPC polished LC plug on the other side.
- Duplex cable with fiber type 9/125µm OS2
- Cable material: sheath halogen-free and flame-retardant, yellow, solid core with aramid strain relief
- LC connector: connector with high mechanical load capacity, push-pull latched with anti-rotation lock, APC ground joint, ceramic ferrule
- LSH connectors: precision-manufactured connectors with low return loss, APC ground joint, ceramic ferrule, grey
- The LSH connector has a spring-loaded shutter, which fully protects the ferrule from dust and scratches
- LSH APC Polish (8°) / LC UPC Polish
- IL < 0.25dB, RL > 25dB
- IL (typical) < 0.12dB
- Cable OD (outer diameter): 3.0 x 6.0mm



roline® Designed for Professionals

Halogenfree Flame retardant Low Smoke

	Order-No.	– P.U.
ROLINE FO Jumper Cable LSH Duplex, 9/125µm, OS2, LSH APC / LC UPC, LSOH, yellow, 0.5 m	21.15.9510	– 10
ROLINE FO Jumper Cable LSH Duplex, 9/125µm, OS2, LSH APC / LC UPC, LSOH, yellow, 1.0 m	21.15.9511	– 10
ROLINE FO Jumper Cable LSH Duplex, 9/125µm, OS2, LSH APC / LC UPC, LSOH, yellow, 2.0 m	21.15.9512	– 10
ROLINE FO Jumper Cable LSH Duplex, 9/125µm, OS2, LSH APC / LC UPC, LSOH, yellow, 3.0 m	21.15.9513	– 5
ROLINE FO Jumper Cable LSH Duplex, 9/125µm, OS2, LSH APC / LC UPC, LSOH, yellow, 5.0 m	21.15.9515	– 5
ROLINE FO Jumper Cable LSH Duplex, 9/125µm, OS2, LSH APC / LC UPC, LSOH, yellow, 7.5 m	21.15.9516	– 5
ROLINE FO Jumper Cable LSH Duplex, 9/125µm, OS2, LSH APC / LC UPC, LSOH, yellow, 10.0 m	21.15.9517	– 5

VALUE Fibre Optic Universal-Cleaning Products

13.99.3005 - VALUE Fibre Optic Universal Claening Cassette
- Application range: can be used for any optical fiber cables plug type independently
- The cassette cleaner wipes away contaminants from optical connector end face
- Designed for all types of connectors
- Compact size for easy hand-held operations
- Dry-clean without the use of harmful substances
- Cleaning micro fibers are densely stranded and debris free
- Constructed with anti-static material
- Up to 500 cleanings per unit possible
- Contents: 100 Cleaning-Tissues

13.99.3006 - VALUE Fibre Optic Cleaning Pen for SC Plug, 2.5mm
- Ergonomic and comfortable design for cleaning SC connections
- Consistent cleaning results due to its precise mechanical action
- Economical solution with up to 800 endface cleanings in one unit possible
- Cleans both APC and UPC connectors
- Effective on a variety of contaminants, including: Dust / Lint / Oil / Grease

13.99.3007 - VALUE Fibre Optic Cleaning Pen for LC Plug, 1.25mm
- Ergonomic and comfortable design for cleaning SC connections
- Consistent cleaning results due to its precise mechanical action
- Economical solution with up to 800 endface cleanings in one unit possible
- Cleans both APC and UPC connectors
- Effective on a variety of contaminants, including: Dust / Lint / Oil / Grease





		Order-No. – P.U.
VALUE Fibre Optic Cleaning Cassette	A	13.99.3005 – 5
VALUE Fibre Optic Cleaning Pen for SC Plug, 2.5mm	B	13.99.3006 – 5
VALUE Fibre Optic Cleaning Pen for LC Plug, 1.25mm	C	13.99.3007 – 5
VALUE Fibre Optic Cleaning for MPO Plug	D	13.99.3013 – 5

Portable Laser Fiber Optic Checker Pro

For the quick test of Fibre Optic cables.
- Sends a visible (650 nm) strong laser signal through the cable- braking points become transparent by a visible light in the area of the damage
- Universal-connector can be used with common connector types (ST, SC, FC and others)
- Reversibel between continuous and pulsing ray
- Both Multi-mode and Single-mode distances suitable
- Batteries (not included in delivery): 2x Mignon (AA) 1.5V (LR06)



	Order-No. – P.U.
Portable Laser Fiber Checker Pro	13.99.3011 – 25

ROLINE FO Panel 19“ unloaded, 12x Ports SC(Simplex)/LC(Duplex)

For applications like: Data centres, premise installations, telecommunication networks, Data communication
- Offers a flexible, multi functional solution allowing an easy access during installation or re-work with no disturbance of the existing cable or fibres
- Robust 1U sliding patch panel designed to house 12 adapters for SC or LC Multimode and Single-mode applications
- Fiber Optic Patch Panel for 12x Ports SC(Simplex) / LC(Duplex)
- The tray is locked in place with 2x metal screws
- When the tray is fully extended the it can be lowered to a 45 degrees angle and will provide the perfect working platform for installation or maintenance
- Offers 2 cable entry points, cables can be fixed with a gland buffer
- 1x M20 and 1x M25 cable gland included



roline®
Designed for Professionals

	Order-No. – P.U.
ROLINE FO Panel 19“ unloaded, 12x Ports SC(Simplex)/LC(Duplex), black	21.17.0350 – 3

ROLINE Fiber Optic Keystone Jacks

- ROLINE quality keystone adapter for fiber optic cabling
- 2x LC / 2x LC plug
- For installation in fiber optic front plates or for extending fiber optic jumper cables
- High quality plastic housing with keystone technicque
- Sleeve of the ferrule made of phosphor-bronze (PB)
- For Multimode fiber optic jumper cables
- Can be used with 19'' Patch Panel Module frame (26.11.0357 or 26.11.0356)
- Can be used toghether with a Flush Mount Wall Jack for keystones, 2-port (25.16.8579) or with a Surface Wall Mount Frame (25.15.8484)

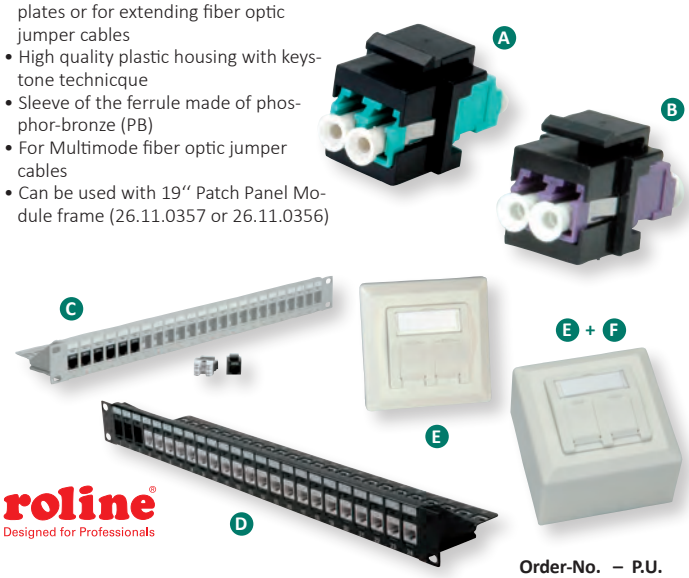

		Order-No.	P.U.
ROLINE Fiber Optic Keystone Jack, LC Duplex, Multimode, OM3	A	21.17.0001	20
ROLINE Fiber Optic Keystone Jack, LC/LC Duplex, Multimode, OM4	B	21.17.0002	20
Keystone 19'' Module frame Cat.5/Cat.6, 24 P., blank, UTP, light grey	C	26.11.0356	5
Keystone 19'' Module frame Cat.5/Cat.6, 24 Ports, blank, UTP, black	D	26.11.0357	5
Flush Mount Wall Oulet for Keystones, 2-port	E	25.16.8579	20
Surface Wall Mount Frame	F	25.16.8484	20

VALUE Fibre Optic Adapters

- Fiber optic adapters and couplings for the cost effective fiber-optic cabling
- For mounting in fiber optic faceplates or for the extension for fiber optic cables
- The adapters are made of high quality plastic
- The guide sleeve for the ferrules are available in phosphor bronze (PB) for OM3/OM4

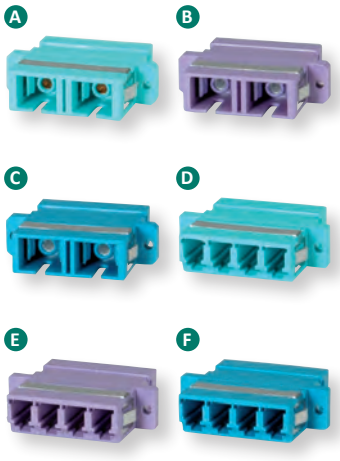

21.99.0650
- 19" FO panel to split multi-core fiber optic cable on single cores
- Prepared for splice trays
- 1.5 mm sheet steel, black
- Cable entry: PG 13
- Space for max. 24 SC duplex couplings 21.99.0655/0656/0657 or 24 LC couplings (quadruple) 21.99.0660/0661/0662



		Order-No.	P.U.
VALUE Fibre Optic Adapter SC/SC Duplex, OM3, PB	A	21.99.0655	50
VALUE Fibre Optic Adapter SC/SC Duplex, OM4, PB	B	21.99.0656	50
VALUE Fibre Optic Adapter SC/SC Duplex, OS2, Z	C	21.99.0657	50
VALUE Fibre Optic Adapter LC quadruple, OM3, PB	D	21.99.0660	50
VALUE Fibre Optic Adapter LC quadruple, OM4, PB	E	21.99.0661	50
VALUE Fibre Optic Adapter LC quadruple, OS2, Z	F	21.99.0662	50
VALUE 19" splice box empty 1U, extendable, 24x SC-DX quadruple	G	21.99.0650	4

ROLINE Fibre Optic Adapters

- Fiber optic adapters and couplings for the cost effective fiber-optic cabling
- For mounting in fiber optic faceplates or for the extension for fiber optic cables
- The guide sleeve for the ferrules are available for every type and version of phosphor bronze (PB) as well as a version of zirconium (Z)
- The version of zirconium ferrule is also suitable for single-mode

21.17.0050
- 4x LC / 4x LC socket
- For installation or extension of fiber optic cables
- High quality plastic housing (green)
- Guide sleeves of the ferrule made of zirconium (Z)
- Suitable for multi-mode fiber optic cable
- Quad LC coupling- fits in front panel cutouts for duplex SC

21.17.0040 / 21.17.0041
- LSH/LSH- socket
- To extend fiber optic cables
- Guide sleeves of the ferrule ceramic
- IL(typical) < 0.15dB / • RL(typical) > 60dB
- With nut and screw applicability

roline®
Designed for Professionals

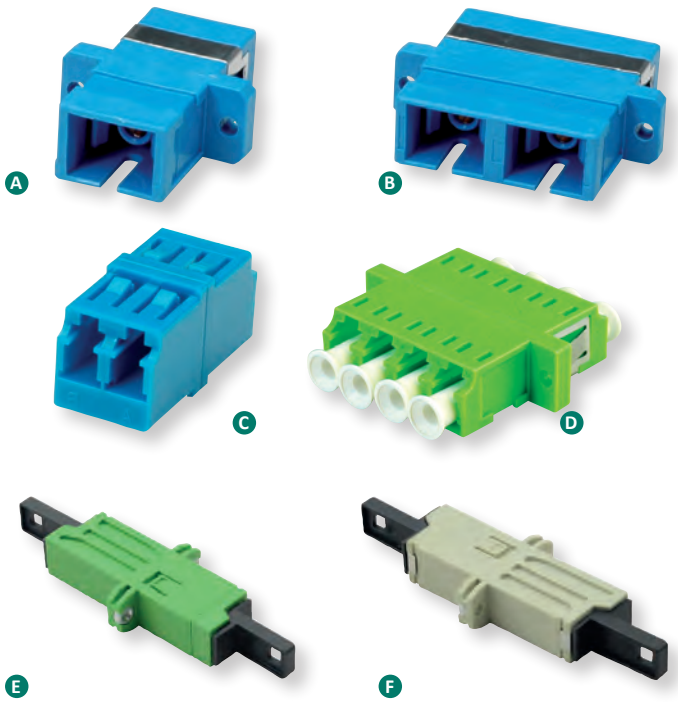

		Order-No.	P.U.
ROLINE Fibre Optic Adapter SC Simplex Multimode, PB	A	21.17.0075	50
ROLINE Fibre Optic Adapter SC Simplex Single-Mode, Z	A	21.17.0071	50
ROLINE Fibre Optic Adapter SC Duplex Multimode, PB	B	21.17.0085	50
ROLINE Fibre Optic Adapter SC Duplex Single-Mode, Z	B	21.17.0081	50
ROLINE Fibre Optic Adapter LC Duplex Single-Mode, Z	C	21.17.0141	50

		Order-No.	P.U.
ROLINE Fibre Optic Adapter LC quadruple, Multimode, OM5, Z	D	21.17.0050	50

		Order-No.	P.U.
ROLINE Fibre Optic Adapter, LSH, Flange, green	E	21.17.0040	50
ROLINE Fibre Optic Adapter, LSH, Flange, beige	F	21.17.0041	50

VALUE MPO (multi-fibre push-on) Cabling System

DATA CENTER Product

MPO (multi-fibre push-on) cabling system

The MPO (multi-fibre push-on) cabling system is an easy-to-use solution based on a high density connector and ribbon-fiber cables with 12 cores. This system is commonly used in data centers but also e.g. between server rooms. It is designed for reliable and quick operations with the obvious benefits of less space requirements and improved scalability. The pre-terminated MPO cables can fan-out to other connections, usually to LC, to interconnect with standard-density products or services, using modules or fan-out cables.

Key Facts MPO

- Fully supports all optical fiber applications within the Ethernet family
- Modular solution with reusable modules and cables
- High-density cabling saves pathway space and gives improved airflow compared to traditional cable bundles
- Cables are pre-terminated in the factory to the correct length with high density connectivity

MPO components

MPO connectors contact usually 12 fibers in a single connection. A connection must be stable and its ends correctly aligned. These aspects are essential for achieving the required transmission parameters.

Therefore MPO connectors are available in a male version (with pins) or a female version (without pins). The pins ensure that the fronts of the connectors are exactly aligned on contact and that the end-faces of the fibers are not offset.Remark: all cables are halogen-free (LSOH). The connectors are low-loss connectors with a very low attenuation.

1. Cables

MPO cables are delivered already terminated. That requires greater care in planning in advance but it has a number of advantages: short installation times, tested and guaranteed quality and great reliability.

Trunk cables:

Trunk cables serve as a permanent link connecting the MPO modules to each other. Trunk cables are available with 12 fibers. Their ends are terminated with 12-fiber MPO connectors female version (without pins).

Fan-Out cables:

Fan-Out cables are used for the connection of a MPO cable to standard-density connectors, usually to 12 LC connectors.

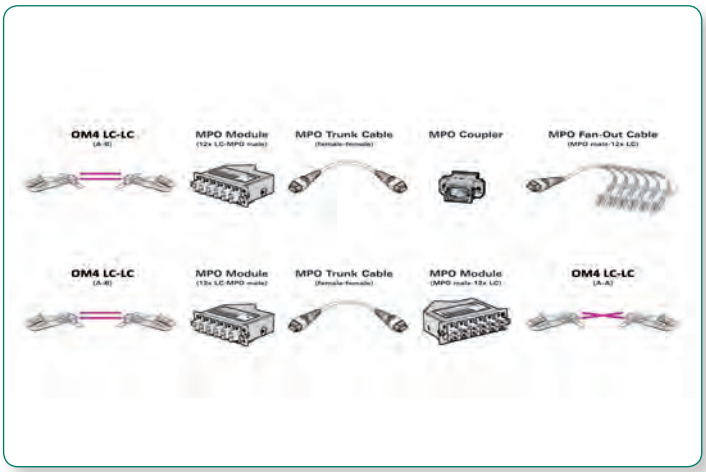

Fiber optic - Cable OM4:

Please see the ROLINE Fiber optic jumper cable 50/125µm OM4 in our catalogue.The key point of each installation is to ensure the correct wiring from transceiver to receiver. In case of using a set of cassettes, trunkcables and duplex patchcords - you need to follow a certain guideline for the polarity method of the trunkcables. The case described in the graphic is according to the polarity A method, means the duplex fibre optic jumper cables MUST be CROSS connected on one side and STRAIGHT connected on the second side.

2. Adapters

Adapters are used to connect two MPO connectors. They enforce that both keys are up. So the two connectors are connected while in the same position in relation to each other.

3. Modules

Modules and adapter plates are what connect the permanent link to the standard-density patch cable.

The MPO module enables the user to take the fibers brought by a trunk cable and distribute them to a duplex cable. As already assembled units, the MPO modules are fitted with 12 fibers and have LC adapters on the front side and MPO at the rear. The modules can be built in panels to be installed in a 19“ rack.

Connection rules

a) When creating an MPO connection, always use one male connector and one female connector plus one MPO adapter.

b) Never connect a male to a male or a female to a female. With a female-to-female connection, the fiber cores of the two connectors will not be at the exact same height because the guide pins are missing. That will lead to losses in performance. A male-to-male connection has even more disastrous results. There the guide pins hit against guide pins so no contact is established. This can also damage the connectors.

c) Never dismantle an MPO connector. The pins are difficult to detach from an MPO connector and the fibers might break in the process.



	Order-No.	– P.U.
VALUE MPO Trunk Cable 50/125µm OM4, MPO/MPO, violet, 3.0 m	21.99.1101	– 10
VALUE MPO Trunk Cable 50/125µm OM4, MPO/MPO, violet, 5.0 m	21.99.1102	– 10
VALUE MPO Trunk Cable 50/125µm OM4, MPO/MPO, violet, 10.0 m	21.99.1103	– 5
VALUE MPO Trunk Cable 50/125µm OM4, MPO/MPO, violet, 15.0 m	21.99.1105	– 5
VALUE MPO Fan-Out Cable 50/125µm OM4, MPO/12x LC, violet, 2m	21.99.1100	– 10
VALUE MPO/MPO Coupler	21.99.1106	– 10
VALUE MPO Module, MPO-Male /12x LC - Female	21.99.1107	– 5
VALUE MPO Panel 19“ for 3 Modules	21.99.1108	– 5

Product similar to picture / module includes MPO-Male /12x LC - Female

VALUE / ROLINE 19“ LCD KVM Consoles

DATA CENTER Product

The professional solution for server-management.
- 19“ LCD console combines the function of a keyboard, a touchpad and a 43 cm/48 cm TFT together in a 1 U casing for a 19“ rack
- For an installation depth of 63 to 90 cm
- Keyboard layout: English (UK), others on demand
- Contents: Console, rails with mounting accessories, rack mount brackets, keys, KVM cable (HDDB-15/VGA + 2x PS/2, 1.8 m), USB cable, power supply, power cord, CD with manual, quick installation guide
- **Technical particularity of the ROLINE consoles:** Dual rail design for independent panel and keyboard drawer. Panel can be left open while rack door is closed, so that it can e. g. be used as a surveillance monitor.





Monitor data:
- Panel protected by tempered glass
- Active 43 cm/48 cm matrix TFT display
- Max. resolution (nominal): 1280 x 1024 Pixel (4:3 Format) or 1920 x 1080 Pixel (DVI, 4:3 Format), 1440 x 900 Pixel (16:10 Format)
- Refresh rate: up to 80 kHz
- Contrast: 400:1
- Brightness: 250 cd/m²



Value®

roline®
Designed for Professionals

Recommended switches and cables (ONLY for ROLINE Consoles):
- 14.01.3224 ROLINE 19“ KVM Switch, 1 User- 8 PC, USB and PS/2
- 14.01.3225 ROLINE 19“ KVM Switch, 1 User- 16 PC, USB and PS/2
- Cable for PS/2: 11.01.5522 (3 m)
- Cable for USB: 11.01.5525 (1.8 m), 11.01.5526 (3 m)



26.99.012x/013x



26.50.008x,
26.50.030x,
26.50.020x

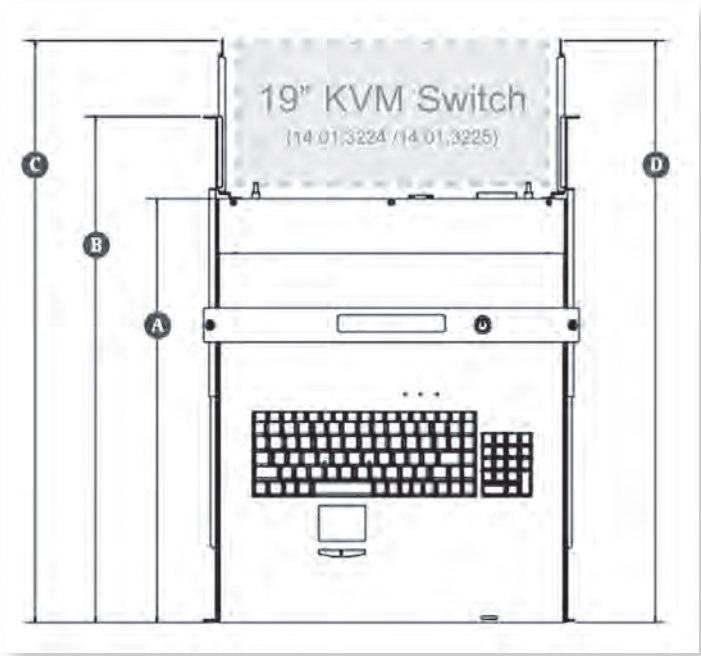

Dimensions (mm)	A	B	C	D
ROLINE 19“ KVM Console, 43 cm (26.50.008x, 26.50.030x)	460	560- 870	640	640
ROLINE 19“ KVM Console, 48 cm (26.50.020x)	530	635- 950	730	730

Legend:
A- Installation depth of console
B- Distance of 19“ cabinet’s vertical posts
C- Installation depth of console with switch (14.01.3324/5)
D- Length of rails



	Order-No.	– P.U.
VALUE 19“ LCD KVM Console, 43 cm (17“) TFT, VGA, USB, UK	26.99.0120	– 1
VALUE 19“ LCD KVM Console, 43 cm (17“) TFT, VGA, USB, German	26.99.0121	– 1
VALUE 19“ LCD KVM Console, 43 cm (17“) TFT, VGA, USB, Swiss	26.99.0122	– 1
VALUE 19“ LCD KVM Console, 43 cm (17“) TFT, VGA, USB, French	26.99.0123	– 1
VALUE 19“ LCD KVM Console, 48 cm (19“) TFT, VGA, USB, UK	26.99.0130	– 1
VALUE 19“ LCD KVM Console, 48 cm (19“) TFT, VGA, USB, German	26.99.0131	– 1
VALUE 19“ LCD KVM Console, 48 cm (19“) TFT, VGA, USB, Swiss	26.99.0132	– 1
VALUE 19“ LCD KVM Console, 48 cm (19“) TFT, VGA, USB, French	26.99.0133	– 1
ROLINE 19“ LCD KVM Console, 43 cm (17“) TFT, VGA, USB + PS/2, UK	26.50.0081	– 1
ROLINE 19“ LCD KVM Console, 43 cm (17“) TFT, VGA, USB + PS/2, German	26.50.0082	– 1
ROLINE 19“ LCD KVM Console, 43 cm (17“) TFT, VGA, USB + PS/2, Swiss	26.50.0083	– 1
ROLINE 19“ LCD KVM Console, 43 cm (17“) TFT, VGA, USB + PS/2, French	26.50.0084	– 1
ROLINE 19“ LCD KVM Console, 43 cm (17“) TFT, DVI-I, USB + PS/2, UK	26.50.0301	– 1
ROLINE 19“ LCD KVM Console, 43 cm (17“) TFT, DVI-I, USB + PS/2, German	26.50.0302	– 1
ROLINE 19“ LCD KVM Console, 43 cm (17“) TFT, DVI-I, USB + PS/2, Swiss	26.50.0303	– 1
ROLINE 19“ LCD KVM Console, 43 cm (17“) TFT, DVI-I, USB + PS/2, French	26.50.0304	– 1
ROLINE 19“ LCD KVM Console, 48 cm (19“) TFT, VGA, USB + PS/2, UK	26.50.0201	– 1
ROLINE 19“ LCD-KVM Console, 48 cm (19“) TFT, VGA, USB + PS/2, German	26.50.0202	– 1
ROLINE 19“ LCD-KVM Console, 48 cm (19“) TFT, VGA, USB + PS/2, Swiss	26.50.0203	– 1
ROLINE 19“ LCD-KVM Console, 48 cm (19“) TFT, VGA, USB + PS/2, French	26.50.0204	– 1

VALUE Stand/Wall Mount Cabinets with Glass Front

- VALUE stand/wall mount cabinets for the installation of active and passive network components
- Toughened glass front with lock with rotary handle, the direction of opening the door can be changed according to the requirement, the opening degree of the door is more than 180°
- Quick open side door, convenient for equipment installation and maintaining
- One cable channel on the top and the other on the bottom
- 19“ standard installation, installation depth can be adjusted according to the requirement
- Colour: black (RAL 7021)
- Remark: Delivery as an assembly set
- Maximum load capacity: 60kg
- Contents: Wall mount rack, grounding set, installation material

Optional: for 19“ accessories please see also pages 1.47 - 1.51





	Order-No. – P.U.
VALUE 19“ Wall Mount Rack 6U, 368x570x450mm (HxWxD)	26.99.0146 – 1
VALUE 19“ Wall Mount Rack 6U, 368x570x600mm (HxWxD)	26.99.0147 – 1
VALUE 19“ Wall Mount Rack 9U, 505x570x450mm (HxWxD)	26.99.0149 – 1
VALUE 19“ Wall Mount Rack 9U, 505x570x600mm (HxWxD)	26.99.0150 – 1
VALUE 19“ Wall Mount Rack 12U, 640x570x450mm (HxWxD)	26.99.0151 – 1
VALUE 19“ Wall Mount Rack 12U, 640x570x600mm (HxWxD)	26.99.0152 – 1
VALUE 19“ Wall Mount Rack 15U, 775x570x450mm (HxWxD)	26.99.0154 – 1
VALUE 19“ Wall Mount Rack 15U, 775x570x600mm (HxWxD)	26.99.0155 – 1
VALUE 19“ Wall Mount Rack 18U, 910x570x450mm (HxWxD)	26.99.0157 – 1
VALUE 19“ Wall Mount Rack 18U, 910x570x600mm (HxWxD)	26.99.0158 – 1

VALUE Network / Server Cabinets 42U

DATA CENTER Product

VALUE 19“-Cabinets, black, in 42 U, with two versions - as Server and as Cabling Cabinet

- Server Cabinet in BxT 800x1000mm with vented doors on front and back side
- Cabling Cabinet in BxT 800x800mm with a glass door on the front side and a back door in sheet steel
- Two pairs of 19“-profiles
- All doors are lockable with single point locking
- Both Cabinet versions have 4 castors as well as 4 adjustable feet
- Demountable side panels, convenient for installation and maintenance
- Top cover of Server Cabinet with cable entry opening possibility
- Top cover of Cabling Cabinet with cable entry opening possibility and with 4 cooling fans included
- All cabinets come with 3 fixed shelfs and a pair of vertical cable management

Optional: for 19“ accessories please see also pages 1.47 - 1.51

REMARK:
Please be aware that the cabinets are assembled.
To avoid damage during transport, a special care is needed.
The transport sizes are different (larger) to the mentioned dimensions in the description.
The transport has to be done in a vertical position!



A







B

per Spedition

		Order-No. – P.U.
VALUE Network Cabinet 42U, 2000x800x800 mm	A	26.99.0810 – 1
VALUE Server Cabinet 42U, 2000x800x1000 mm	B	26.99.0820 – 1



Switchboxes / Hubs

2

"Star" KVM Switches 2.02
19"Desktop" KVM Switches 2.03
19" KVM Switches . . . . . 2.04 – 2.05
19'' LCD KVM Switches . . . . . 2.04 – 2.05
KVM DisplayPort Switches 2.06
KVM HDMI Switches . . . . . 2.06 – 2.07
KVM Extenders. 2.07, 2.08, 2.09
KVM DVI Switches / Extender. 2.08
Manual USB Switches . . . . . 2.09 – 2.10
USB 2.0 / 3.2 Gen 1 / 2 Hubs . . . . . 2.10 – 2.14

VALUE KVM Switch „Star“ 1 User - 2 PCs, VGA, USB

- Two PCs can be handled with one monitor, one keyboard and one mouse
- Console side Connector: 1x HD15 F, 2x USB Type A
- Switching can be done by several ways:
  - Hot keys (keyboard combination)
  - Manual switching with direct-access port selectors on top of the switch
- Max. resolution: 1920 x 1200 @ 75Hz
- LEDs for easy status monitoring
- USB bus powered
- No firmware or drivers required for Windows
- Contents: Switch with integrated KVM cables (each 1.15 m), HD15 M, USB Type A, manual

Technical Data:	**14.99.3261**
Monitor connection:	1x HD15 F
Keyboard connection:	1x USB Type A F*
Mouse connection:	1x USB Type A F*
PC monitor connection:	2x HD15 M*
PC keyboard connection*:	1x USB Type A F*
PC mouse connection*:	1x USB Type A F*
PC mouse and keyboard*:	-
Max. resolution (nominal):	1024 x 768
Casing:	Plastic

*attached moulded Cables

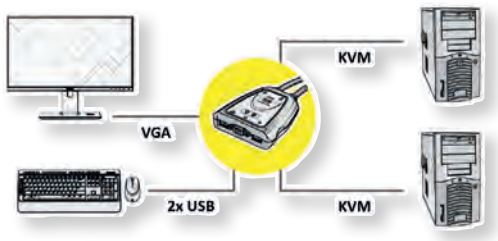



	Order-No.	**– P.U.**
VALUE KVM Switch „Star“ 1 User - 2 PCs, VGA, USB	14.99.3261	– 5

ROLINE KVM Switch „Star“ 1 User - 2 PCs, Audio, USB

One USB keyboard, USB mouse and VGA monitor controls two computers

- Automatic KVM-Switch with attached moulded cables
- Computer selection via hot key
- Easy to install, no software required
- Keyboard, mouse and monitor emulation
- Audio (speaker) enabled
- LEDs for easy status monitoring
- No power supply needed
- Contents: Switch with 2 integrated KVM cables (each 1.1 m)
- Contents: Switch, manual

Technical data:	**14.01.3234**
PC Monitor connection:	1x VGA
PC Keyboard / Mouse connection:	2x USB Type A
Audio connection:	2x 3.5 mm stereo plug
Keyboard/mouse emulation:	yes
Max. resolution (nominal):	1920 x 1080



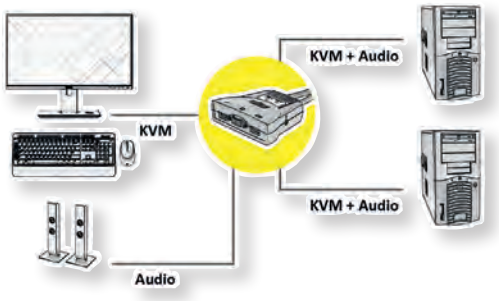





roline®
Designed for Professionals

	Order-No.	**– P.U.**
ROLINE KVM Switch „Star“ 1 User - 2 PCs, Audio, USB	14.01.3234	– 3

VALUE KVM Switch „Star“, 1 User - 2 PCs, HDMI, USB

This 2-port USB KVM Star switch employs HDMI display technology for use with high definition digital monitors and HDTVs.

- Controls 2 computers from a single USB console (keyboard/mouse)
- Easy switching by push buttons or hot keys from USB keyboard
- Supports Auto-Scan function
- Max. resolution (nominal): 1920 x 1200
- Connectors console side: 1x HDMI, 2x USB (keyboard, mouse)
- Connectors computer side: 1x HDMI, 1x USB (keyboard/mouse)
- LEDs for PC and audio status monitoring
- Hot-swapping and plug & play
- Self powered through USB connection
- Contents: Switch with KVM cables (each 1.2 m), manual



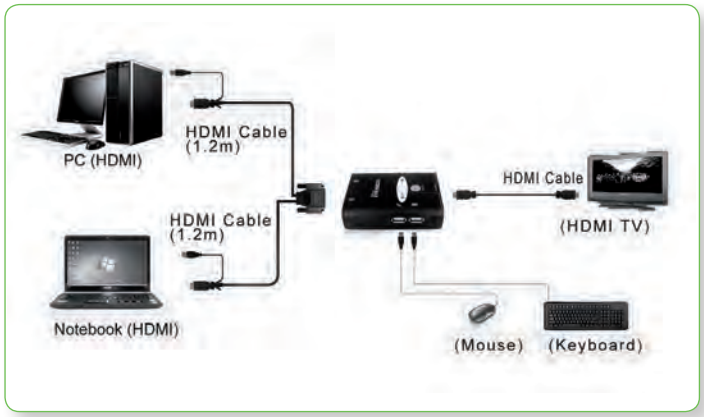

Technical data:

Monitor connection:	1x HDVideo F
Keyboard connection:	1x USB Type A F
Mouse connection:	1x USB Type A F
PC monitor connection:	2x HDVideo F
PC keyboard/mouse connection:	2x USB Type A M
Max. resolution (nominal):	1920 x 1200
Dimensions:	65 x 85 x 25 mm
Weight:	330 g

	Order-No. – P.U.
VALUE KVM Switch „Star“, 1 User - 2 PCs, HDMI, USB	14.99.3250 – 6

VALUE 19“ KVM Switch with OSD, USB

- Automatic KVM Switch
- Up to 8 PCs can be handled with one keyboard, one mouse and one monitor
- The switch is cascadable, up to 64 PCs can be handled with one keyboard, mouse and one monitor
- The switching can be done on several ways:
  - Automatically in a scan run (Scan Interval adjustable: 5- 99 sec.)
  - Manually by buttons on front side of the switchbox
  - Hot key (keyboard combination)
  - Through OSD (On Screen Display)
- Max. resolution (nominal): 1280 x 1024 (local unit);
  1024 x 786 (remote unit with optional IP module)
- Hot-swappable function
- LEDs for channel display
- 19“-rack mountable



- **Remark: For connecting PCs, special cables are needed, that have to be ordered separately (3 m length, USB: 11.99.5501)**
- Contents: KVM switch, power supply, 19“ brackets, manual

REMARK: Product similar to picture

Technical Data:	**14.99.3222**
Monitor connection:	1x HD15 F
Keyboard connection:	1x USB Type A F
Mouse connection:	1x USB Type A F
PC connection:	8x SPHD15 F
Casing:	Metal
Dimensions (WxDxH):	448 × 190 × 44 mm
Hight:	1 U
Power supply:	5V DC, 1A



	Order-No. – P.U.
VALUE 19“ KVM Switch with OSD, 1 User - 8 PCs, USB	14.99.3222 – 2
VALUE KVM Cable (USB) for 14.99.3222, black, 3 m	11.99.5501 – 8

VALUE 19“ LCD KVM Consoles & Switches

DATA CENTER Product

The low-cost solution for professional Server Management.

VALUE 19“ consoles:
- The VALUE 19“ LCD consoles combine the function of a keyboard, a touchpad and a TFT together in a 1 U casing for a 19“ rack
- Easy to install, single rail design
- Supports USB and PS/2 keyboard and mouse, VGA
- For an installation depth of 63 cm
- Telescopic Slides

Monitor data 43/48 cm
- Panel protected by tempered glass
- Active 43/48 cm matrix TFT display
- Screen ratio: 4:3
- Max. resolution (nominal): 1920 x 1080 Pixel

- **Contents:**
  Console, Power Cord, KVM Cable (1.8m, VGA HD15), USB Cable, Rack Mount Brackets, Mounting Accessories, Keys, Manual

VALUE 19“ KVM switches
- Additional to 19“ LCD KVM Consoles
- Up to 8 PCs can be controlled with one keyboard, one mouse and one monitor
- Supports both PS/2 and USB interface for connecting to PC ports conveniently
- No software required- easy PC selection via On Screen Display (OSD), push buttons, hot-keys
- Hot-pluggable- add or remove connected PCs without powering off the KVM switch or PCs
- Contents: switch, rails with mounting accessories, rack mount brackets, KVM cable (HDDB-15/VGA + 1x USB + 2x PS/2, 1.8m), power adapter, power cord, CD with manual, quick installation guide

REMARK: Please be noted that this console can’t used together with 14.01.3224 and 14.01.3225





	Order-No. – P.U.
VALUE 19“ LCD KVM Console, 43 cm (17“) TFT, VGA, USB, UK	26.99.0120 – 1
VALUE 19“ LCD KVM Console, 43 cm (17“) TFT, VGA, USB, German	26.99.0121 – 1
VALUE 19“ LCD KVM Console, 43 cm (17“) TFT, VGA, USB, Swiss	26.99.0122 – 1
VALUE 19“ LCD KVM Console, 43 cm (17“) TFT, VGA, USB, French	26.99.0123 – 1
VALUE 19“ LCD KVM Console, 48 cm (19“) TFT, VGA, USB, UK	26.99.0130 – 1
VALUE 19“ LCD KVM Console, 48 cm (19“) TFT, VGA, USB, German	26.99.0131 – 1
VALUE 19“ LCD KVM Console, 48 cm (19“) TFT, VGA, USB, Swiss	26.99.0132 – 1
VALUE 19“ LCD KVM Console, 48 cm (19“) TFT, VGA, USB, French	26.99.0133 – 1
VALUE 19“ LCD KVM Switch 1 User - 8PCs, 43 cm (17“) TFT (4:3), VGA, USB, UK	26.99.0160 – 1
VALUE 19“ LCD KVM Switch 1 User - 8PCs, 43 cm (17“) TFT (4:3), VGA, USB, German	26.99.0161 – 1
VALUE 19“ LCD KVM Switch 1 User - 8PCs, 43 cm (17“) TFT (4:3), VGA, USB, Swiss	26.99.0162 – 1
VALUE 19“ LCD KVM Switch 1 User - 8PCs, 43 cm (17“) TFT (4:3), VGA, USB, French	26.99.0163 – 1
VALUE 19“ LCD KVM Switch 1 User - 8PCs, 48 cm (19“) TFT (16:9), VGA, USB, UK	26.99.0190 – 1
VALUE 19“ LCD KVM Switch 1 User - 8PCs, 48 cm (19“) TFT (16:9), VGA, USB, German	26.99.0191 – 1
VALUE 19“ LCD KVM Switch 1 User - 8PCs, 48 cm (19“) TFT (16:9), VGA, USB, Swiss	26.99.0192 – 1
VALUE 19“ LCD KVM Switch 1 User - 8PCs, 48 cm (19“) TFT (16:9), VGA, USB, French	26.99.0193 – 1

ROLINE 19“ LCD KVM Consoles & Switches

DATA CENTER Product

The professional solution for server-management.

ROLINE 19“ consoles:
- The ROLINE 19“ LCD Console combines the function of a keyboard, a touchpad and a 43 cm/48 cm TFT together in a 1 U casing for a 19“ rack
- For an installation depth of 63 to 90 cm
- Keyboard layout: English (UK)

- Technical particularity of the ROLINE consoles: Dual rail design for independent panel and keyboard drawer. Panel can be left open while rack door is closed, so that it can e.g. be used as a surveillance monitor.

Monitor data:
- Panel protected by tempered glass
- Active 43 cm/48 cm matrix TFT display
- Max. resolution (nominal): 1280 x 1024 Pixel (4:3 Format) or 1920 x 1080 Pixel (DVI, 4:3 Format) 1440 x 900 Pixel (16:10 Format)
- Refresh rate: up to 80 KHz
- Contrast: 400:1
- Brightness: 250 cd/m²

- Contents: Console, rails with mounting accessories, rack mount brackets, keys, KVM cable (HDDB-15/VGA + 2x PS/2, 1.8 m), USB cable, power supply, power cord, CD with manual, quick installation guide

ROLINE 19“ KVM Switches:
- For combination with the ROLINE 19“ LCD KVM Consoles
- Up to 8/16 PCs can be controlled with one keyboard, one mouse and one monitor
- Supports both PS/2 and USB interface for connecting to PC ports conveniently
- No software required- easy PC selection via On Screen Display (OSD), push buttons, hot-keys
- Hot-pluggable- add or remove connected PCs without powering off the KVM switch or PCs
- Support two layers password security protection and search PC server name
- Keyboard status restored when switching PCs
- Please find adequate Cat. 5 and IP modules on the following pages

- **Remark:** Please order KVM cables separately:
  Cable for PS/2: 11.01.5522
  Cable for USB: 11.01.5525, 11.01.5526

- Contents: Switch, installation brackets, screws, manual



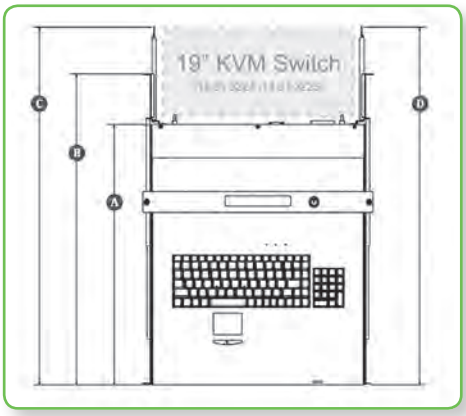

roline®
Designed for Professionals



Dimensions (mm)	A	B	C	D
ROLINE 19” KVM Console, 43 cm (26.50.008x)	460	560 – 870	640	640
ROLINE 19” KVM Console, 48 cm (26.50.020x / 030x)	530	635 – 950	730	730

Legend:
A – Installation depth of console
B – Distance of 19” cabinet’s vertical posts
C – Installation depth of console with switch (14.01.3324/5)
D – Length of rails

	Order-No. – P.U.
ROLINE 19“ LCD KVM Console, 43 cm (17“) TFT, VGA, USB + PS/2, UK	26.50.0081 – 1
ROLINE 19“ LCD KVM Console, 43 cm (17“) TFT, VGA, USB + PS/2, German	26.50.0082 – 1
ROLINE 19“ LCD KVM Console, 43 cm (17“) TFT, VGA, USB + PS/2, Swiss	26.50.0083 – 1
ROLINE 19“ LCD KVM Console, 43 cm (17“) TFT, VGA, USB + PS/2, French	26.50.0084 – 1
ROLINE 19“ LCD KVM Console, 48 cm (19“) TFT, VGA, USB + PS/2, UK	26.50.0201 – 1
ROLINE 19“ LCD-KVM Console, 48 cm (19“) TFT, VGA, USB + PS/2, German	26.50.0202 – 1
ROLINE 19“ LCD-KVM Console, 48 cm (19“) TFT, VGA, USB + PS/2, Swiss	26.50.0203 – 1
ROLINE 19“ LCD-KVM Console, 48 cm (19“) TFT, VGA, USB + PS/2, French	26.50.0204 – 1
ROLINE 19“ LCD KVM Console, 43 cm (17“) TFT, DVI-I, USB + PS/2, UK	26.50.0301 – 1
ROLINE 19“ LCD KVM Console, 43 cm (17“) TFT, DVI-I, USB + PS/2, D	26.50.0302 – 1
ROLINE 19“ LCD KVM Console, 43 cm (17“) TFT, DVI-I, USB + PS/2, CH	26.50.0303 – 1
ROLINE 19“ LCD KVM Console, 43 cm (17“) TFT, DVI-I, USB + PS/2, French	26.50.0304 – 1
ROLINE 19“ KVM Switch VGA, 1 User - 8 PCs, USB + PS/2	14.01.3224 – 2
ROLINE 19“ KVM Switch VGA, 1 User - 16 PCs, USB + PS/2	14.01.3225 – 2
ROLINE KVM Cable Switch - PC, PS/2, 3.0 m, for 14.01.3224 and 14.01.3225	11.01.5522 – 4
ROLINE KVM Cable Switch - PC, USB, 1.8 m, for 14.01.3224 and 14.01.3225	11.01.5525 – 8
ROLINE KVM Cable Switch - PC, USB, 3.0 m, for 14.01.3224 and 14.01.3225	11.01.5526 – 4



VALUE KVM Switch, 1 User - 4 PCs, HDMI 4K, USB, Audio, USB Hub

4K | 3D capable

- 4-port KVM switch with HDMI, USB and USB hub
- One console controls up to 4 HDMI graphic PCs and one additional USB device
- Integrated 1-port USB 2.0 hub
- Microphone support
- Fully compliant with HDMI High Speed
- Supports nominal 480p, 720p, 1080i and 1080p; 3840x2160 (30Hz)
- 3D capable
- Switching via front panel push buttons or IR remote control
- Keyboard and mouse emulation
- Supports Windows 98SE/ME/2000/XP/Vista/7/8
- Contents: Switch, power supply, remote control, manual



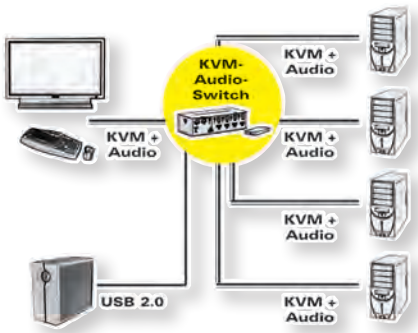

Technical data:	14.99.3337
Monitor connection:	1x HDMI F
Keyboard connection:	1x USB Type A
Mouse connection:	1x USB Type A
Audio connection:	1x 3.5 mm audio jack
PC monitor connection:	4x HDMI F
PC keyboard/mouse connection:	4x USB Type B
PC audio connection:	4x 3.5 mm audio jack
Dimensions (WxDxH):	46.5 x 170 x 75 mm

	Order-No. – P.U.
VALUE KVM Switch, 1 User - 4 PCs, HDMI 4K, USB, Audio, USB Hub	14.99.3337 – 5

ROLINE KVM Switch, 1 User - 2/4 PCs, DisplayPort, with USB Hub

- Control 2/4 computers from a single USB console (DisplayPort monitor, USB mouse and keyboard)
- Supports DisplayPort with a resolution up to 2560 x 1600
- Integrated 2-port USB 2.0 hub allows 2/4 computers to share a USB device
- Front panel push button or hot-key function for easy computer selection
- No software required
- Supports Windows
- Contents: KVM switch, power supply, manual







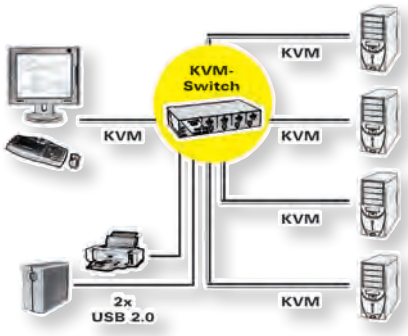

Technical data:	14.01.3327	14.01.3329
Monitor connection:	1x DP F	1x DP F
Keyboard/mouse connection:	2x USB type B F	2x USB type B F
PC monitor connection:	2x DP F	4x DP F
PC keyboard/mouse connection:	2x USB type B F	4x USB type B F
Dimensions (WxDxH):	40 x 125 x 70 mm	44 x 220 x 130 mm
Max. resolution (nominal)	1920 x 1200	1920 x 1200
Dimensions (HxWxD)	40 x 125 x 70 mm	44 x 220 x 130 mm

	Order-No. – P.U.
ROLINE KVM Switch, 1 User - 2 PCs, DisplayPort, with USB Hub	14.01.3327 – 4
ROLINE KVM Switch, 1 User - 4 PCs, DisplayPort, with USB Hub	14.01.3329 – 1

ROLINE KVM Switch, 1 User - 2 PCs, DisplayPort, with 2x USB3.0 Hub

4K | 2160p UHD-1

Automatic DisplayPort v1.2 KVM Switch for 1 User / 2 PCs, with 2-Port USB 3.0 / USB 3.2 Gen 1 Hub and resolutions of up to 4096x2160 @60Hz!

- Switching between PCs is done either by hot key or automatically during scan run
- Keyboard and mouse emulation via two separate USB 2.0 ports
- Supports graphics cards and monitors with DisplayPort connectors, with a resolution of max. 4096x2160 @60Hz
- LED display informs about the channel assignment
- Additional 2-port USB 3.0 / USB 3.2 Gen 1 hub for connecting e.g. USB sticks or SSDs
- Contents: KVM switch, power supply, manual

Note: According to the current specifications of USB.org we have adapted the technical data of our USB 3 products. The new designation for the already known USB specifications has been changed to USB 3.2 Gen 1 (formerly USB 3.0 / USB 3.1 Gen 1) and USB 3.2 Gen 2 (formerly USB 3.1 / USB 3.1 Gen 2).

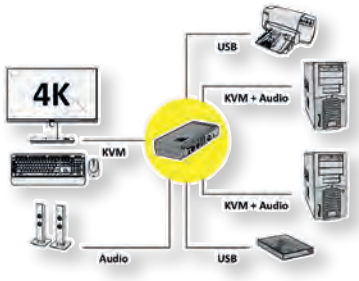



	Order-No. – P.U.
ROLINE KVM Switch, 1 User - 2 PCs, DisplayPort, with USB Hub	14.01.3331 – 2

ROLINE KVM Switch, 2 PCs, HDMI 4K, USB

3D capable | 4K | 2160p UHD-1

2-Port HDMI KVM Switch to control two computers with only one mouse, one keyboard and one screen - with a resolution of up to 3840x2160 @60Hz!

With this very small KVM switch two computers can be operated with a USB mouse, a USB keyboard and a monitor.
- Switching between the PCs is done via Hot Key on the keyboard or via Select Button on the KVM.
- LED display informs about the channel assignment
- Max. Resolution: 3840x2160 @60Hz
- Non-slip rubber feet and solid metal housing
- Contents:KVM Switch, power supply unit, operating instructions

NEW

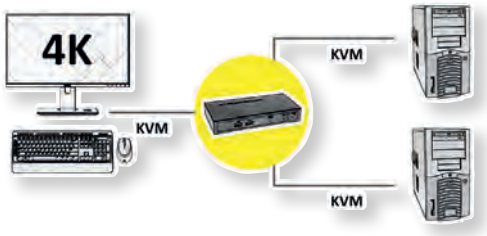



roline® Designed for Professionals

	Order-No. – P.U.
ROLINE KVM Switch, 2 PCs, HDMI 4K, USB	14.01.3426 – 5

VALUE KVM Extender over Cat. 5, VGA, USB

USB KVM extender allows access to a computer system from up to 150 meters away from a remote USB console (USB keyboard, monitor and USB mouse).

- USB KVM extender allows access to a computer system from up to 150 meters away from a remote USB console (USB keyboard, mouse and VGA monitor)
- One Cat.5e cable connects the local and remote unit- up to 150 m away
- Dual console operation- control your system from both the local and remote console
- Max. video resolution (nominal): 1280 x 1024
- Auto resolution of the active console
- Supports VGA, SVGA
- Local monitor supports DDC, DDC2, DDC2B
- Casing: Metal
- Contents: Local unit, remote unit, 2x power adapters, USB KVM cable, manual





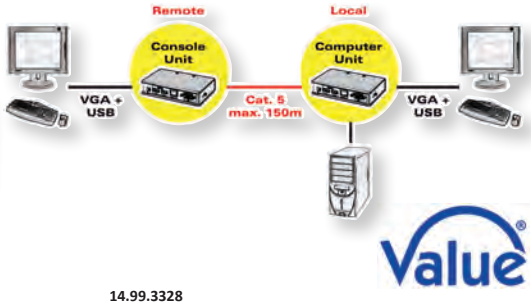

Value®

Technical data:	14.99.3328	
Cable length (nominal):	up to 150 m	
Max. resolution (nominal):	1280 x 1024 (depends on cable length)	
Cable type:	Cat.5e TP cable	
Power supply:	5 VDC, 1 A	
Dimensions (WxDxH):	82 x 25 x 13 mm	
Connectors:	**remote unit**	**local unit**
Monitor:	1x HD 15-pin F	1x HD 15-pin F
Mouse/keyboard:	2x USB type A F	2x USB type A F
PC connection:	1x HD 15-pin F	1x HD 15-pin F

	Order-No. – P.U.
VALUE VGA KVM Extender over RJ-45, USB	14.99.3328 – 5

ROLINE Smart KVM Extender, VGA, USB

Smart combination of KVM Extender, KVM Switch and PC Share
- Remotely locates the keyboard, mouse and monitor up to 150 m away from a computer
- Connection of the Computer Unit and Station Unit via Cat. 5e TP cable
- Supports USB consoles
- Video compensation can be adjusted by hot key to ensure the optimum signal quality for any length of cable within the limit
- Locates the computer away from your desk and work area, saving you valuable space
- Allows two users to share one computer both in local and remote areas
- Beeps confirmation for key control makes the operation easier and cross-checked
- Easy installation
- Supports standard USB keyboards and mice
- Compatible with XGA, VGA and SVGA system
- Contents: Local unit with power supply unit, remote unit, manual

Example of use: ROLINE KVM extension for remote operation of a workplace. The system provides a local, and a remote unit to connect another console. This can be operated via a Cat5 cable with remote VGA and USB control unit. Up to 150 m away from the PC, the console can be placed in convenient access while the PC is installed themselves in a safe environment.



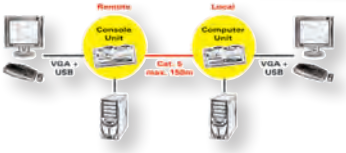

roline® Designed for Professionals

Technical Data:	14.01.3249	
Max resolution (nominal):	1024 x 768	(depends on cable length)
Cable type:	Cat.5e TP cable	(recommended: solid wire AWG24)
Cable length:	up 150 m	
Power supply for local unit:	9V DC, 600mA	
Dimensions (each WxDxH):	156 x 65 x 20 mm	
Connections:	**Local Unit**	**Remote Unit**
Monitor:	1x HD15 F	1x HD15 F
Mouse/keyboard:	1x USB F	1x USB F
PC connection:	1x SPHD15 F	1x SPHD15 F

	Order-No. – P.U.
ROLINE Smart KVM Extender, VGA, USB	14.01.3249 – 6

ROLINE KVM Extender over Gigabit Ethernet, DVI, USB

KVM extension over Gigabit Ethernet through Cat.5 connection
- Supports DVI with high resolution video up to 1920 x 1200 (WUXGA), 1920 x 1080 (Full HD)
- Supports USB PC or KVM switch
- Ideal for professional video applications
- 8 selections on the DIP rotary switch available for pairing
- Up to 4 pairings can be transmitted simultaneously over the Gigabit Ethernet switch (max. 3 stages)
- Stable, metal housing
- Power supply via an external power supply
- Correspondent receiver unit: 14.01.3045



Technical specifications:
- Max resolution (nominal): 1920 x 1200 (WUXGA), 1920 x 1080 (Full HD)
- Dimensions: 31 x 131 x 150 mm
- Power supply: 12V DC; 1.5A
- Connectors: DVI Female, USB B connector female, RJ-45 socket (LAN)
- Contents: Transmitter unit, 1x power supply, patchcable, manual



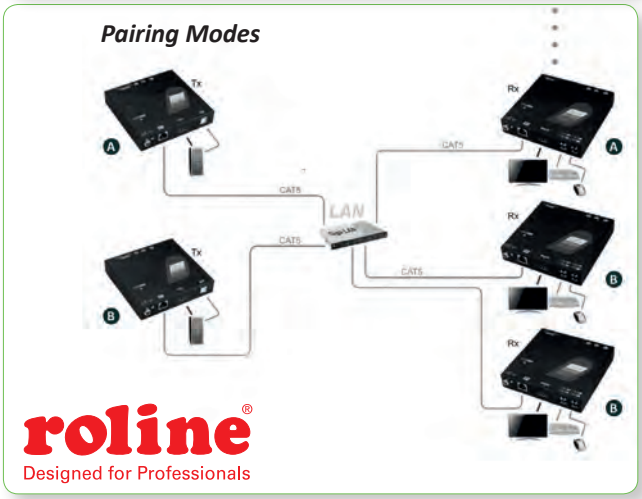

Technical data:

Cable length (nominal):	up to 100 m	
Max. resolution (nominal):	1920 x 1080 (depends on cable length)	
Cable type:	Cat.5e TP cable	
Power supply:	12VDC; 1.5A	
Dimensions (HxWxD):	30 x 132 x 150 mm	
Connectors:	**Receiver (remote unit)**	**Transmitter (local unit)**
Monitor:	1x DVI F	1x DVI F
Mouse/keyboard:	4x USB Type A F	USB Type B F

	Order-No. – P.U.
ROLINE KVM Extender over Gigabit Ethernet, DVI, USB, Transmitter (TX)	14.01.3044 – 4
ROLINE KVM Extender over Gigabit Ethernet, DVI, USB, Receiver (RX)	14.01.3045 – 4

roline®
Designed for Professionals

ROLINE KVM Extender over Gigabit Ethernet, HDMI, USB

1080p FULL HD

KVM extension over Gigabit Ethernet through Cat.5 connection
- Supports HDMI with high resolution video up to 1920 x 1080 (Full HD)
- Supports USB PC or KVM switch
- Ideal for professional video applications
- 8 selections on the DIP rotary switch available for pairing
- Up to 4 pairings can be transmitted simultaneously over the Gigabit Ethernet switch (max. 3 stages)
- HDCP-compliant
- No drivers needed or software required
- Stable, metal housing
- Correspondent receiver unit: 14.01.3043



Technical specifications:
- Max resolution (nominal): 1920 x 1080 (Full HD)
- Dimensions: 31 x 131 x 150 mm
- Power supply: 12V DC; 1.5A
- Connectors: HDMI jack, USB B connector, RJ-45 socket (LAN)
- Transmitter (TX) unit connectors: Monitor: 1x HDMI; 1x USB type B F; 1x RJ45
- Contents: Transmitter unit, power adapter, patch cable, CD with manual, Quick Start Guide



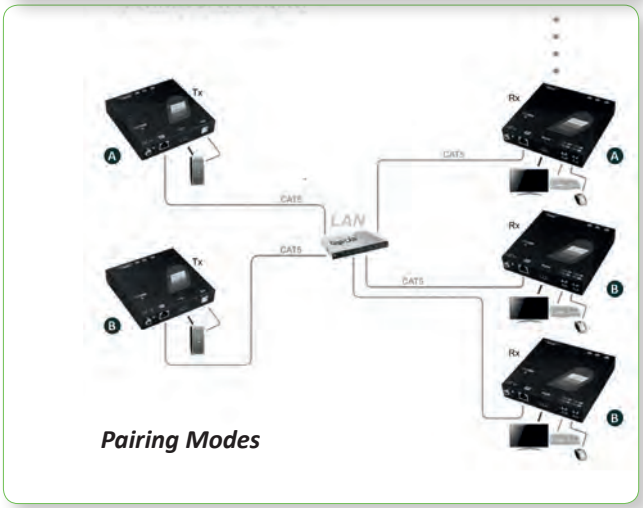

roline®
Designed for Professionals

Technical data:

Cable length (nominal):	up to 100 m	
Max. resolution (nominal):	1920 x 1080 / 1920 x 1200 (WUXGA) (depends on cable length)	
Power supply:	12VDC; 1.5A	
Dimensions (HxWxD):	30 x 132 x 150 mm	
Connectors:	**Receiver (remote unit)**	**Transmitter (local unit)**
Monitor:	1x HDMI F	1x HDMI F
Mouse/keyboard:	4x USB Type A F	1x USB Type B F
Power supply output	DC 12V; 1,5A	DC 12V; 1,5A

	Order-No. – P.U.
ROLINE KVM Extender over Gigabit Ethernet, HDMI, USB, Transmitter (TX)	14.01.3042 – 4
ROLINE KVM Extender over Gigabit Ethernet, HDMI, USB, Receiver (RX)	14.01.3043 – 4

VALUE KVM Extender over Cat.6, HDMI, 4x USB

1080p FULL HD

KVM extension over up to 60 m through the Cat.6 connection
- Supports HDMI with high resolution video up to 1920 x 1080 (Full HD)
- Supports USB PC or KVM switch
- Ideal for professional video applications
- HDCP-compliant
- No drivers needed or software required
- Stable, metal housing
- Power supplied

- Receiver (RX) unit connectors: Monitor: 1x HDMI; 4x USB type A F; 1x Mini USB 5-pin F, 2x RJ45
- Transmitter (TX) unit connectors: Monitor: 1x HDMI; 2x Mini USB 5-pin F; 2x RJ45
- Contents: Transmitter unit, receiver unit, 2x power supply, manual



Technical data:	14.99.3041
Cable length (nominal):	up to 60 m
Max. resolution (nominal):	1920 x 1080 (depends on cable length)
Cable type:	Cat.6 TP cable
Power supply:	5VDC; 1A
Dimensions (HxWxD):	22 x 84 x 78 mm

Connectors:	Receiver (remote unit)	Transmitter (local unit)
Monitor:	1x HDMI F	1x HDMI F
Peripheral devices:	4x USB Type A F	1x USB Mini 5-pin F

	Order-No. – P.U.
VALUE KVM Extender over Cat.6, HDMI, 4x USB, 60 m	14.99.3041 – 4

VALUE Manual USB 2.0 Printer Switches

- This USB Switch offers the possibility for 2 PCs to share a single USB device such as a printer, scanner or digital camera
- Access to the USB device manually via button on the switch
- Supports USB 2.0
- Two LEDs indicate the active Port
- Bus-powered mode

- Contents: USB Switch



Technical information	14.99.5032	14.99.5034
Input connections	2x USB Type B	4x USB Type B
Output connections	1x USB Type A	1x USB Type A
Dimensions (HxWxD)	90 x 70 x 25 mm	90 x 70 x 25 mm

	Order-No. – P.U.
VALUE Manual USB 2.0 Printer Switch, 2 Ports	14.99.5032 – 10
VALUE Manual USB 2.0 Printer Switch, 4 Ports	14.99.5034 – 10

VALUE Manual USB 3.2 Gen 1 Switch

Manual USB 3.0 / USB 3.2 Gen 1 switch to access a USB device from different computers
- To use a peripheral device such as a printer/scanner on two PCs without using a print server
- Also suitable for SSDs, USB sticks or other data carriers
- Supports USB 3.0 / USB 3.2 Gen 1 and therefore data transfer rates of up to 5Gbps
- The assignment of the PC to the device is done by a switch on the device.
- No additional power supply required
- Contents: Switch, manual





	Order-No. – P.U.
VALUE Manual USB 3.2 Gen 1 Switch, 2 Ports	14.99.2015 – 10

ROLINE USB 3.2 Gen 1 Peripheral Sharing Device, 4x USB 3.2 Gen 1 Ports

Manual USB 3.0 / USB 3.2 Gen 1 switch to access four different USB devices from different computers

- Enables 2/4 computers to share 4 USB 3.0 devices
- Simple port selection via remote port selector for a convenient switch placement
- USB 3.0 / USB 3.2 Gen 1 compliant, supp. data transfer rates of up to 5Gbps
- Backwards compatible with USB 2.0 and USB 1.1
- LEDs indicates which computer is active
- Over-current protection
- Multiplatform support – Windows (Vista/7/8/8.1/10) and Mac OS X 10.3+
- Bus-powered
- Micro USB power jack for additional power supply
- Hot pluggable, no additional driver or software required
- Contents:
  Switch, 2x/4x USB 3.0 cables (Type A/B, 1.1m),
  1x remote port selector, manual







roline®
Designed for Professionals

	Order-No.	– P.U.
ROLINE USB 3.2 Gen 1 Sharing Device, 2 PCs, 4x USB 3.2 Gen 1 Ports	14.01.2312	– 3
ROLINE USB 3.2 Gen 1 Sharing Device, 4 PCs, 4x USB 3.2 Gen 1 Ports	14.01.2314	– 3

Technical information	**14.01.2312**	**14.01.2314**
Input connections	2x USB Type B	4x USB Type B
Output connections	4x USB Type A	4x USB Type A

VALUE USB 2.0 Notebook Hub, 4 Ports

- This hub can connect up to four USB devices
- Compact and nice design with attached USB cable
- Fully backwards compatible with USB 1.1
- Automatically switches to the highest speed supported by the connected device
- LED display for power and port-status
- Power is supplied by PC interface
- Contents: Hub, attached USB cable (3 cm)





Technical data:

PC connection:	1x USB type A (attached cable)
Input:	4x USB type A
Dimensions (WxDxH):	90 x 44 x 14 mm
Power supply (for 14.99.5016):	5 VDC, 2 A

Value®



	Order-No.	– P.U.
VALUE USB 2.0 Notebook Hub, 4 Ports	14.99.5015	– 20
VALUE USB 2.0 Notebook Hub, 4 Ports, with power supply	14.99.5016	– 20

ROLINE USB 2.0 Hub, with Repeater

This hub with an active repeater cable extends the distance between the hub and the computer up to 12 m.

- Active extension of USB 2.0 bus
- The extension acts like a USB hub with 12 m cable
- Full compliance with USB 2.0, USB 1.1
- Plug & play, no additional drivers required
- Power over USB port from the PC
- Additional extension: With its unique design, this hub can lock to USB 2.0 active repeater cable 12.04.1086 by clipping- which offers another 12 m of length. With up to 5 of this hub & repeater cables chained together, you can reach a maximum distance of up to 60 m. The active repeater cable 12.04.1086 is only compatible with 12.04.1085 and can't be separately used.





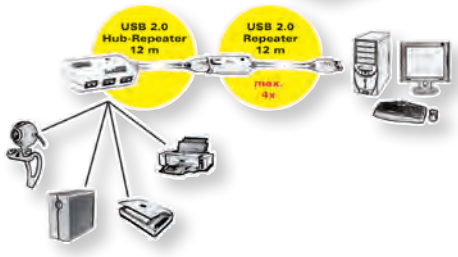

Technical information	**12.04.1085**	**12.04.1086**
Side A connection (PC)	1x USB Type A Male	Type A Male
Side B connection (Peripherals)	4x USB Type A Female	Type A Female
Length	12 m	12 m

	Order-No.	– P.U.
ROLINE USB 2.0 Hub, 4 Ports, with Repeater, 12.0 m	12.04.1085	– 10
ROLINE USB 2.0 Active Repeater Cable for 12.04.1085, 12.0 m	12.04.1086	– 10

roline®
Designed for Professionals



ROLINE USB Hubs „Black and White“

- These hubs allow you to connect up to 4/7 USB peripheral devices to your computer or notebook over one USB port
- Stylish „Black and White“ design and compact size
- USB 2.0, compatible with USB 1.1
- Power LED
- Plug & play
- Bus-power and self-power mode (power supply included)
- **14.02.5011:** stand for upstanding or flat mounting included
- **Contents:** Hub, power supply, USB 2.0 cable, manual

Remark 11.02.8849:
- Special USB connection cable for the ROLINE hubs 14.02.5011
- For the connection between the hub (14.02.5011) and a USB device (e.g. printer, scanner, ...)

roline®
Designed for Professionals

Technical data:	**14.02.5013**	**14.02.5011**	**14.02.5027**	**14.02.5029**
PC connection:	1x USB 2.0 5-Pin Mini	1x USB 2.0 Type B	1x USB 3 Type B	1x USB 3 Micro B
Input:	4x USB 2.0 Type A	7x USB 2.0 Type A	4x USB 3 Type A	7x USB 3 Type A
Dimensions (WxDxH):	18 x 65 x 40 mm	85 x 25 x 70 mm	23 x 100 x 63 mm	26 x 145 x 63 mm

		Order-No.	**– P.U.**
ROLINE USB 2.0 Hub „Black and White“, 4 Ports, with Power Supply	A	14.02.5013	– 20
ROLINE USB 2.0 Hub „Black & White“, 7 Ports, with Power Supply	B	14.02.5011	– 10
ROLINE USB 2.0 Cable type A/B for USB Hub 14.02.5011, 12 m		11.02.8849	– 5
ROLINE USB 3.2 Gen 1 Hub „Black & White“, 4 Ports, with Power Supply	C	14.02.5027	– 10
ROLINE USB 3.2 Gen 1 Hub „Black & White“, 7 Ports, with Power Supply	D	14.02.5029	– 5

ROLINE USB 3.2 Gen 1 Hub with Repeater

This hub with an active repeater cable extends the distance between the hub and the computer up to 10 m.

- Active extension of USB 3.2 Gen 1 bus
- The extension acts like a USB hub with 10 m cable
- Full compliance with USB 2.0, USB 1.1
- Plug & play, no additional drivers required
- USB Bus powered
- Cascadable one time
- Power adapter (5V/3.5A, included) for heavy power consumption devices
- Compatible with Win XP / 7 /10
- Contents: Cable





Technical data:
- Connectors: 1x USB type A M, 4x USB Type A F
- Cable length: 10 m
- Housing dimensions: 81 x 40 x 17 mm

roline®
Designed for Professionals

	Order-No. – P.U.
ROLINE USB 3.2 Gen 1 Hub, 4 Ports, with Repeater, 10.0 m	12.04.1097 – 4

VALUE USB 3.2 Gen 1 Desktop Hubs

These hubs can connect up to seven USB devices with SuperSpeed

- 7x USB 3.2 Gen 1 Type A SuperSpeed ports
- Data transfer rates of up to 5.0 Gbit/s
- Fully backwards compatible with USB 2.0
- Hot-swappable
- Battery charger function
- Dimensions (HxWxD): 15 x 85 x 59 mm
- Power supply (5V, 2A/4A) included
- Colour: Black
- Contents: Hub, power supply, USB cable (1.1 m), manual



Value®

Technical data:	14.99.5047
PC connection:	1x USB 3 Micro Type B
Input:	7x USB 3 Type A
Dimensions (HxWxD):	15 x 85 x 59 mm
Power supply:	5V 4A

	Order-No. – P.U.
VALUE USB 3.2 Gen 1 Desktop Hub, 7 Ports, with Power Supply	14.99.5047 – 5

ROLINE USB 3.2 Gen 1 Hub

This hub can connect up to four USB devices with SuperSpeed
- Data transfer rates of up to 5 Gbit/s
- Fully backwards compatible with USB 2.0, USB 1.1
- PC connection: 1x USB 3 Type B
- Input: 4 USB 3 Type A SuperSpeed ports
- LED status indicator for each port
- Hot-swappable
- Colour: Black
- Contents: Hub, power supply, USB cable



roline®
Designed for Professionals

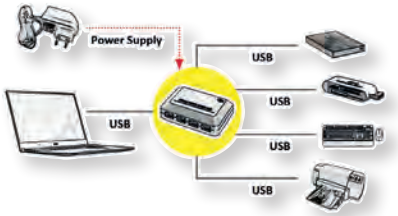

Technical data:	
PC connection:	1x USB 3 Type B
Input:	4x USB 3 Type A
Dimensions (HxWxD):	24 x 95 x 55 mm
Power supply:	5V 4A

	Order-No. – P.U.
ROLINE USB 3.2 Gen 1 Hub, 4 Ports, with Power Supply	14.02.5015 – 10

ROLINE USB 2.0 Notebook Hub, Type A+C Connection Cable

4-Port USB 2.0 Notebook Hub with Type A+C connection cable for data and power supply.

- This hub can connect up to four USB devices via USB type A or C
- Compact and nice design with attached USB cable
- Fully backwards compatible with USB 1.1
- Automatically switches to the highest speed supported by the connected device
- LED display for power
- Power is supplied by PC interface or main adapter (A or C port)
- Contents: Hub, attached USB cable (30 cm Type A)





roline®
Designed for Professionals

	Order-No. – P.U.
ROLINE USB 2.0 Notebook Hub, 4 Ports, Type A+C Connection Cable	14.02.5037 – 10

VALUE USB 3.2 Gen 1 Hub, 4 Ports, Type C Connection Cable

With this hub up to four USB 3.0 / USB 3.2 Gen 1 peripheral devices can be connected to the USB Type C port of a PC.

- Fixed USB cable with type C connector for host connection
- Four USB Type A ports for connecting peripheral devices
- One Port USB Type C PD (Power Delivery) to charge your MacBook, Ultrabook or mobile devices (only 14.99.5038)
- Data transfer rates of up to 5 Gbps (USB 3.0 / USB 3.2 Gen 1)
- Automatic determination of the optimal transmission rate
- Aluminium housing
- Contents: Hub

Note: According to the current specifications of USB.org we have adapted the technical data of our USB 3 products. The new designation for the already known USB specifications has been changed to USB 3.2 Gen 1 (formerly USB 3.0 / USB 3.1 Gen 1) and USB 3.2 Gen 2 (formerly USB 3.1 / USB 3.1 Gen 2).

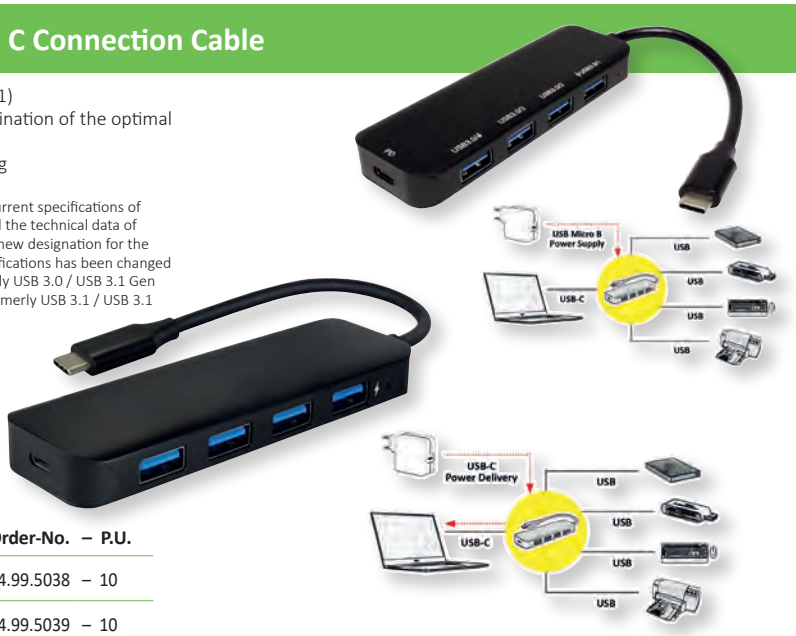

	Order-No. – P.U.
VALUE USB 3.2 Gen 1 Hub, 4 Ports, Type C Connection Cable, with (PD)	14.99.5038 – 10
VALUE USB 3.2 Gen 1 Hub, 4 Ports, Type C Connection Cable	14.99.5039 – 10

VALUE USB 3.2 Gen 1 Hub, 7 Ports, Type C Connection Cable, with Power Supply

With this USB 3.0 / USB 3.2 Gen 1 Hub up to seven USB peripheral devices can be connected to the USB port of a PC.
This hub can connect up to 7 USB 3.0 / USB 3.2 Gen 1 devices to a USB Type C port

- Data transfer rates of up to 5 Gbit/s
- LED status indicator
- Hot-swappable
- Colour: Black
- Contents: Hub, power supply, USB3.2 Gen1 cable

Note: According to the current specifications of USB.org we have adapted the technical data of our USB 3 products. The new designation for the already known USB specifications has been changed to USB 3.2 Gen 1 (formerly USB 3.0 / USB 3.1 Gen 1) and USB 3.2 Gen 2 (formerly USB 3.1 / USB 3.1 Gen 2).

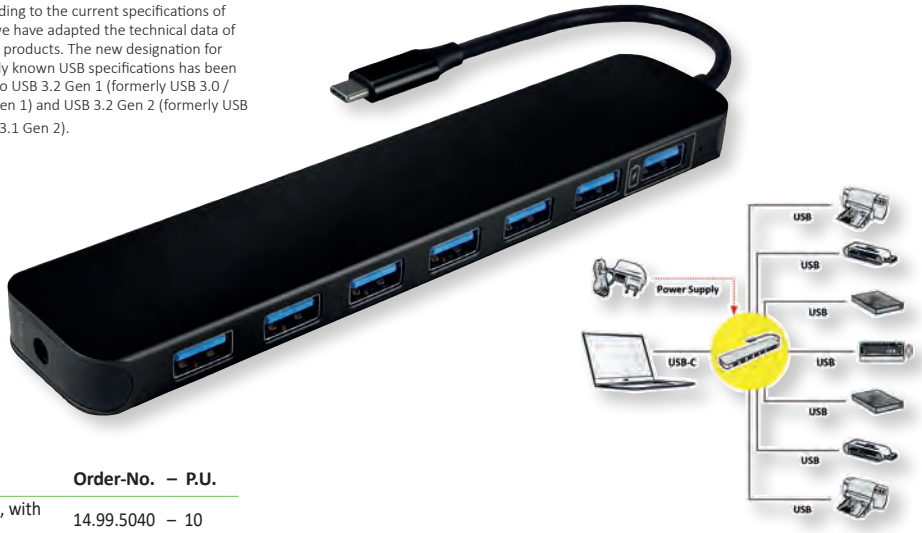

	Order-No. – P.U.
VALUE USB 3.2 Gen 1 Hub, 7 Ports, Type C Connection Cable, with Power Supply	14.99.5040 – 10

ROLINE USB 3.2 Gen 1 Hub, 3 / 4 Ports, Type C Connection Cable

3-Port USB 3.2 Gen 1 Slim Hub made of dark grey aluminium with USB Type C connection cable - for connecting up to three peripheral or storage devices to a tablet (like an Apple iPad Pro), Ultrabook, Notebook/Laptop or PC via USB Type C. Including a Card Reader for connecting a micro SD card.

- 3-Port USB 3.2 Gen 1 Type A Hub with data rates up to 5GBit/s
- Suitable for Tablets, Macs/MacBooks, Ultrabooks, Notebooks/Laptops or PCs via USB Type C
- One Micro SD card reader port
- Suitable for peripherals such as keyboard, mouse and printer or for mass storage devices such as USB sticks and external hard drives
- Slim Hub with extremely small housing
- Dark grey aluminium housing
- Power supply via USB Type C
- Contents: Hub

Note: According to the current specifications of USB.org we have adapted the technical data of our USB 3 products. The new designation for the already known USB specifications has been changed to USB 3.2 Gen 1 (formerly USB 3.0 / USB 3.1 Gen 1) and USB 3.2 Gen 2 (formerly USB 3.1 / USB 3.1 Gen 2).

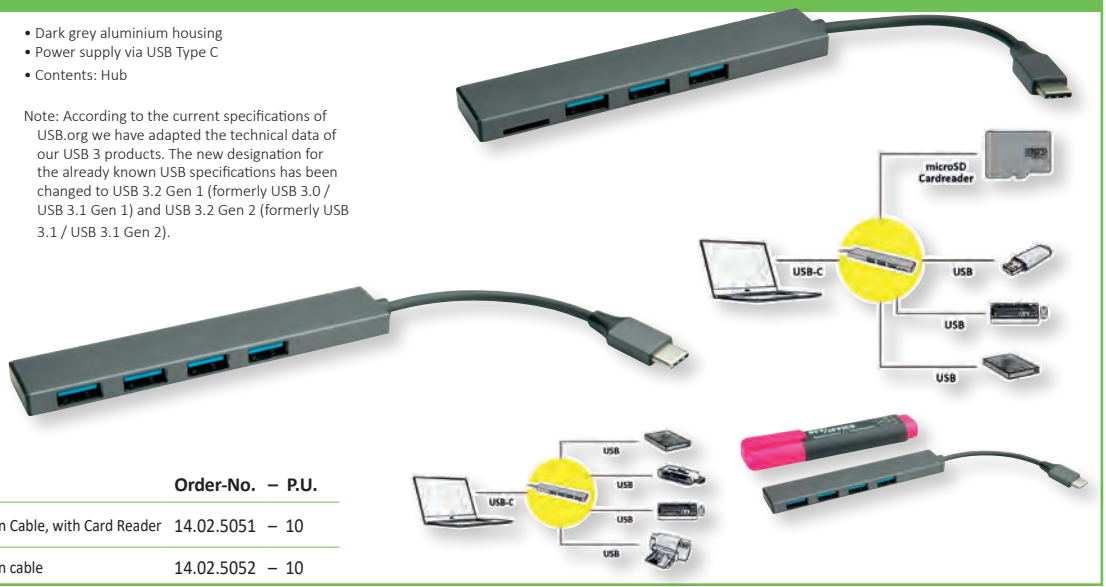

	Order-No. – P.U.
ROLINE USB3.2 Gen 1 Hub, 3 Ports, Type C Connection Cable, with Card Reader	14.02.5051 – 10
ROLINE USB3.2 Gen 1 Hub, 4 Ports, Type C Connection cable	14.02.5052 – 10

ROLINE USB 3.2 Gen 1 Hub, Type C Connection

This ROLINE hub can connect up to four USB 3.2 Gen 1 devices (Type A) to a USB Type C port

- Data transfer rates of up to 5 Gbit/s
- Fully backwards compatible with USB 2.0, USB 1.1
- LED status indicator for each port
- Hot-swappable
- Colour: Black
- Contents: Hub, power supply, USB cable





Technical information	14.02.5035
PC connection	1x USB Type C
Device connection	4x USB Type A
Dimensions (HxWxD)	15 x 90 x 40 mm

roline® Designed for Professionals

	Order-No.	P.U.
ROLINE USB 3.2 Gen 1 Hub, 4 Ports, Type C Connection, with Power Supply	14.02.5035	5

ROLINE USB 3.2 Gen 1 Hub, Type C Connection, with PD

This ROLINE hub can connect up to four USB 3.2 Gen 1 devices (Type A) to a USB Type C port and has 1 additional Type C Power Delivery port (1x PD)

- Data transfer rates of up to 5 Gbit/s
- Fully backwards compatible with USB 2.0, USB 1.1
- Hot-swappable
- Colour: silver
- Contents: Hub

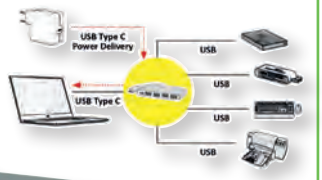



Technical information	14.02.5045
PC connection	1x USB Type C
Device connection	4x USB Type A
Dimensions (HxWxD)	11 x 94 x 181 mm

roline® Designed for Professionals

	Order-No.	P.U.
ROLINE USB 3.2 Gen 1 Hub, 4 Ports, Type C Connection, w. Power Delivery (PD)	14.02.5045	10

ROLINE USB 3.2 Gen 1 Hub, Type C Connection Cable

This ROLINE hub can connect up to four USB 3.2 Gen 1 devices (Type A) to a USB Type C port

- Data transfer rates of up to 5 Gbit/s
- Fully backwards compatible with USB 2.0, USB 1.1
- LED status indicator for each port
- Hot-swappable
- USB Micro B connector for optional power supply via power supply unit
- Dimensions: 11 x Ø 60 x 200 mm
- Colour: silver
- Contents: Hub, power supply, USB cable





roline® Designed for Professionals

	Order-No.	P.U.
ROLINE USB 3.2 Gen 1 Hub, 4 Ports, Type C Connection Cable	14.02.5036	10

ROLINE USB 3.2 Gen 1 Hub, 4 Ports (3x USB A + 1x C), PD+Data

3-Port USB 3.2 Gen 1 Hub with USB Type C connection cable and additional USB Type C PD (Power Delivery) Port for MacBook, Ultrabook, Notebook/ Laptop or PC with USB Type C.

- This hub can connect up to three USB 3.2 Gen 1 devices (Type A) to a USB Type C port
- Data transfer rates of up to 5 Gbit/s
- USB Type C PD (Power Delivery) for up to 100W of power transmission to your connected device
- Fully backwards compatible with USB 2.0, USB 1.1
- Hot-swappable
- Contents: Hub

roline® Designed for Professionals





	Order-No.	P.U.
ROLINE USB 3.2 Gen 1 Hub, 4 Ports (3x USB A + 1x C), PD+Data	14.02.5038	10

VALUE USB 3.2 Gen 1 to Gigabit Ethernet Converter + 3x USB Hub

This converter is a cost effective solution to convert a USB 3.2 Gen 1 port type C into a 10/100/1000Base-T Ethernet port

- Supports 10/100/1000 Mbit/s auto-sensing capability
- Supports USB 3.2 Gen 1
- Bus powered
- Supports both full-duplex and half-duplex operation in Gigabit Ethernet
- Hub function, 3x
- Supports Windows XP/7/8, Mac OS X
- Contents: Converter





Value®

	Order-No.	P.U.
VALUE USB 3.2 Gen 1 to Gigabit Eth. Converter + 3x USB Hub	12.99.1109	10

ROLINE GOLD USB 3.2 Gen 1 Hub, 4 Ports, Type C Connection Cable

ROLINE GOLD USB 3.0 / USB 3.2 Gen 1 Hub with 4 ports and data transfer rates up to 5Gbit/s! Eye-catching, high-quality design thanks to the golden aluminium housing and the black/ golden nylon sheathed cable.

- 4-Port USB 3.0 / USB 3.2 Gen 1 Hub
- Data transfer rates of up to 5 Gbps
- Narrow, flat design
- Golden aluminium case
- Black/golden nylon braid around the cable
- Golden shield plates and contacts
- Contents: Hub

Note:
According to the current specifications of USB.org we have adapted the technical data of our USB 3 products. The new designation for the already known USB specifications has been changed to USB 3.2 Gen 1 (formerly USB 3.0 / USB 3.1 Gen 1) and USB 3.2 Gen 2 (formerly USB 3.1 / USB 3.1 Gen 2).



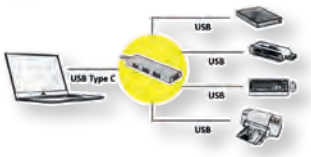

roline® Designed for Professionals

	Order-No.	P.U.
ROLINE GOLD USB 3.2 Gen 1 Hub, 4 Ports, Type C Connection Cable	14.02.5039	5



Computer Cables / Connectors / Adapters

3

ROLINE- THE difference . . . . . 3.02 – 3.03
USB Cables . . . . . 3.04 – 3.12, 3.28 – 3.29
USB Extenders . . . . . 3.08 – 3.10
9-pole / 25-pole / Serial /-Link Cables 3.14
Printer Cables, parallel 3.14
Keyboard Cables PS/2 . . . . . 3.15
Monitor Connection Cables VGA . . . . . 3.15 – 3.16
Monitor Connection Cables DVI . . 3.16 – 3.17, 3.30 – 3.31
HDMI Cables. . . . . 3.17 – 3.21, 3.32 – 3.33
DisplayPort Cables . . . . . 3.22 – 3.27, 3.33
Thunderbolt Cables 3.24
Adapters VGA/DVI/HDMI/DP . . . . . 3.31, 3.34 – 3.38
USB Type C Display Adapters . . . . . 3.37 – 3.38, 3.40
Type C Audio Cables . . . . . 3.42 – 3.44
Audio / Video Cables / Adapters . . . . . 3.44 – 3.45
SATA Cables . . . . . 3.46 – 3.48
Internal Power Cables 3.48
Power Cords . . . . . 3.49 – 3.53
Telephone Cables / Accessories; Ferrites 3.54
Gender Changers 3.13, 3.55
Adapters / Converters . . . . . 3.55 – 3.60

ROLINE – Quality is the Difference!

ROLINE products are developed for professional users and differ considerably in their quality from comparable products in the IT environment. Their high compatibility in combination with other devices is excellent.

ROLINE sets standards for high-quality, practical, user-friendly products, suitable for continuous use at a reasonable price.

ROLINE products comply with EU standards and directives such as CE, ErP, RoHS and REACH. The specifications and defaults of the various standards and technologies are strictly adhered, too.

The difference between ROLINE and cheap standard products is exemplified in the following product categories.

roline®
Designed for Professionals

Well Shielded ROLINE Cable



Bad Shielded Cheap Cable



ROLINE GOLD – for the most demanding Requirements

ROLINE GOLD products combine the outstanding ROLINE quality with a golden shell, an exceptional design and a protective cotton sheath around the cable.

They also provide metal plugs and gilded contacts to ensure the best possible connection between your devices.

roline® GOLD

USB Cables: Facts and Comparison

ROLINE USB Cables
- The data wires meet **AWG[1] 28.**
- The power wires meet **AWG 24** - these wires are especially thick to protect the cable from overheating.
- The used material is **solid copper**, also called bare copper.
- The shielding consists of a foil screen and a tinned copper braid shield with a coverage of **more than 65%.**

Influence of bad cables:
- Data loss due to bad electrical characteristics of wire pairs.
- Already on short distances, the power supply of the connected devices is no longer assured, because of a too big ohmic resistance of the power wire.
- High susceptibility due to bad shield characteristics results in data loss and data transfer errors.

Cheap USB Cables
- The data wires meet **AWG 30 and worse.**
- The power wires meet **AWG 30 and worse**, which results in **potential fire hazard.**
- The used material is **CCA[2]**- solid aluminium covered with a thin copper coating.
- The shielding consists of a foil screen and a braided shield composed of an alloy with a coverage of **less than 30% or completely without a shielding.**

[1]: American Wire Gauge- the cross section of the cable. The lower the AWG, the higher the cross section is.
A cable with a low AWG has a higher quality, than a cable with a large AWG.
[2]: CCA- Copper Clad Aluminium has a bigger ohmic resistance and therefore a power supply of the connected devices isn't assured even over short distances. Data loss and low data transfer rates because of bad electrical characteristics of each pair of wires is also a danger- this can't happen with high quality copper wires.

USB Cables: Standards and Wires

Power Delivery (PD)
- Power delivery provides up to **100W (20V 5A)**
- PD is its own specification, which requires E-Mark chips in all components- through the E-Mark chip, a profile will automatically be chosen dependend on the maximum available capacity of the connected components.

USB 3.0, 3.2 Gen 1 and Gen 2
- **USB 3.2 Gen 1** is former known as **USB 3.0**- both are identical based on their wires and protocols and have a data transmission rate of **up to 5Gb/s.** USB 3.0 has been reintroduced as 3.1 Gen 1 and now as USB 3.2 Gen 1, together with a new connector, the Type C. USB 3.2 Gen 1 is available for the USB connectors A, B, C and Micro A/B.
- **USB 3.2 Gen 2** is limited to the USB Type C connector only. It offers even more than USB 3.2 Gen 1, such as data transmission rates of **up to 10Gb/s** and the **full PD potential with up to 100W (20V 5A)** - those cables are **also called „Full-Featured" and are the state of the art, when it comes to USB Performance**. Both, USB 3.2 Gen 1 and USB 3.2 Gen 2 have identical wires and just differ from the used protocols.

USB Type C Connector
- USB Type C is the newest sort of USB connector and is available for the USB standards 2.0, 3.0 / 3.2 Gen 1 and 3.2 Gen 2.
- Thanks to the symmetrical construction, a reversible usage is possible, now. This is a significant improvement to the predecessors and allows a longer lifespan of the plugs.

USB 2.0 Cable

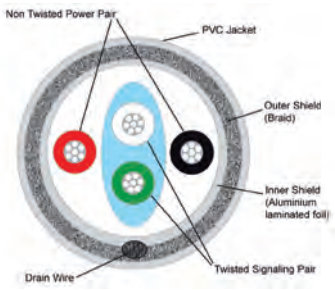

USB 3.0/3.2 Cable

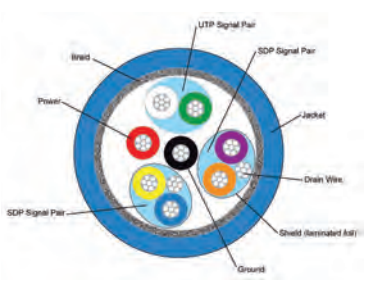

- The data transfer rate and PD function each depend on the USB specification and are not exclusively for the USB Type C plug.
- A Full-Featured USB 3.2 Gen 2 cable has to be with Type C connectors on both ends to grant both, the data transmission rate of 10Gb/s and the full PD functionality.

HDMI and DisplayPort – Future-Proofed technology in up to 8K!

HDMI is the most common cable type nowaday used in the home user multimedia environment- the brands ROLINE and VALUE include a wide range of HDMI products, from HDMI High Speed (1920x1080 @60Hz) to one of the most future-proofed standards: HDMI Ultra HD with Ethernet, with resolutions of up to **7680x4320 @60Hz (8K)** and **HDR support** for an even more impressing color depth**.**

ROLINE Cables
- **Separately shielded twisted wire pairs**; Data wires meet at least **AWG 30**, but can go up to **AWG 24** – depending on the length of the cable.
- The used material is **solid copper.**
- The shielding consists of a **foil screen** and a **tinned copper braid** plus a **shielded connector housing.**
- The contacts of the connector are **gold plated.**

HDMI Ultra HD + Ethernet

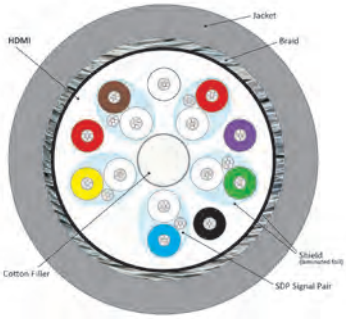

DisplayPort v1.4

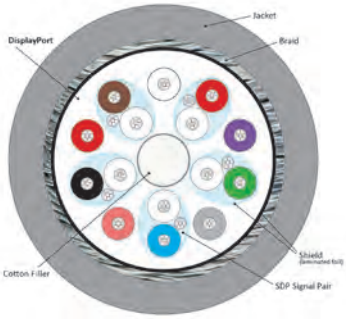

DisplayPort cables are as advanced as HDMI and available in ROLINE and VALUE from the first available version, v1.1 (1920x1080 @60Hz), to the newest one, v1.4. DisplayPort v1.4 offers the same maximum resolution as its HDMI equivalent, **7680x4320 @60Hz.** It's the identical wire as used for DP v1.3 (capable of 5k resolutions), but with an additional **Display Screen Compression**, and **HDR support**.

Cheap Cables
- There are **no twisted wire pairs** used; the data wires are **worse than AWG 30.**
- The used material is **CCS**[1] - solid steel covered with a thin copper coating.
- There is **no shield** for the single twisted wire pairs.
- The total shield consists of a foil screen and a braid shield with very low coverage, or the braid shield is **totally missing.**
- The contacts of the connector are **not gold plated** but – at best – gold touched.

Influence of bad cables:
- **No picture transmission already on short distances** due to bad electrical characteristics of the data wires.
- **High susceptibility** due to bad shield characteristics result in **interference of the picture transmission.**
- No more trouble-free contacting after a low number of contact durability, which causes **sporadical interruptions or complete malfunctions**.

[1]: CCS- Copper Clad Steel is an even worse wire material than CCA (Copper Clad Aluminium), with the highest ohmic resistance. It's extremely rigid, which results in kinks even after slight bending of the cable, which will easily lead to data loss or total malfunctions.

SVGA Cables

ROLINE Cables
- The RGB wires are coaxial cables with 75 Ohm.
- The data wires meet AWG 28 and there are – depending on the cable – 7 or 9 of them.
- The used material is solid copper.
- The shielding consists of a foil screen with drain wire and a tinned copper braid plus a shielded connector housing.
- The contacts of the connector are gold plated.

Influence of bad cables:
- **Very bad picture quality** already on short distances, because of bad electrical characteristics of the data wires and because of missing RGB coaxial wires.
- **No more syncronisation** is possible already on short distances, because the disturbance of the data signal by a too big ohmic resistor of the cable is becoming too strong.
- High susceptibility due to bad shield characteristics result in **interferences of the picture transmission.**
- After a low number of contact durability, trouble-free contacting is not possible anymore, which results in **interruptions or total malfunctions.**

Cheap Cables
- For the RGB signals, **no coaxial wires** are used.
- The data wires meet **AWG 30 and worse;** there are **max. 4** of them.
- The used material is **CCS** = solid steel covered with a thin copper coating.
- The shielding consists of a foil screen without a drain wire, braid shield is missing and the connector housings are not shielded.
- The contacts of the connector are **gold touched** in the best case.

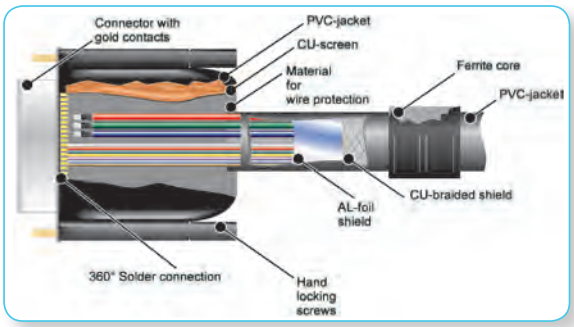

Patch Cords

ROLINE Patch Cords
- The cables **meet the norms of CAT.6 and CAT. 6a.** Some of them were even tested by the GHMT in Germany.
- The used material is **solid copper.**
- The RJ-45 connectors are assembled with **a solid gold plating for the best possible connectivity.**

Cheap Patch Cords
- The cables don't meet any norm and don't pass any legit test.
- The used material is **CCA**- solid aluminium covered with a thin copper coating.
- The RJ-45 connectors are **gold touched** in the best case**.**

Influence of bad cables:
- The normed bandwith of 250MHz for CAT. 6 and 500MHz for CAT. 6a **won't be reached at all.**
- After bending the cable several times, the nonelastic material leads to **interruption and data loss.**
- After a low number of contact durability, trouble-free contacting is not possible anymore, which results in **interruptions or total malfunctions.**



Power Cords

ROLINE & VALUE Power Cords
- The wires meet a cross section of **at least 0.75 mm²** (standard size) in a length of up to 2m.
- The used material is **solid copper.**
- The cables **meet the guidelines and norms regarding the equipment safety.**

Cheap Power Cords
- The wires meet a cross section of **only 0.1 – 0.2 mm²** in a length of up to 2m.
- The cables do **not meet the guidelines and norms regarding the equipment safety**, because they are approved up to 10A but do only guarantee equipment safety for up to 1A at all.

Influence of bad cables:
- **There's a major risk of overheating and fire hazard as soon as the cheap cable is used with high-powered devices with more than 1A of power consumption.**

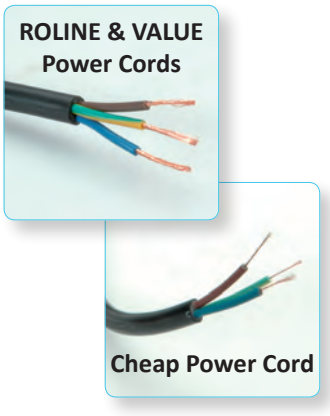

VALUE USB 2.0 Cables

- High quality USB cable with different types of USB connector
- For the connection of devices with USB connector; e.g. digital cameras, mobile phones, MP3 players or PDAs
- Meets standard USB 2.0 (transfer rate up to 480 Mbit/s)
- Colour: white
- Type: A-B, A-A
- Colour: white

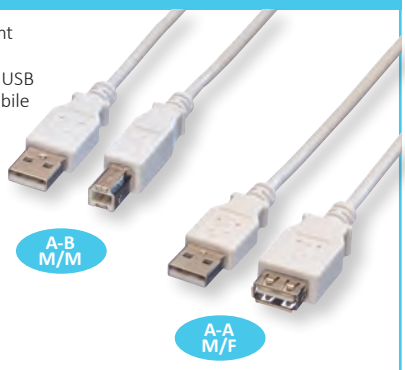

	Order-No.	P.U.
VALUE USB 2.0 Cable, A - B, M/M, white, 0.8 m	11.99.8809	50
VALUE USB 2.0 Cable, A - B, M/M, white, 1.8 m	11.99.8819	100
VALUE USB 2.0 Cable, A - B, M/M, white, 3.0 m	11.99.8831	100
VALUE USB 2.0 Cable, A - B, M/M, white, 4.5 m	11.99.8841	100
VALUE USB 2.0 Cable, A - A, M/M, white, 0.8 m	11.99.8909	50
VALUE USB 2.0 Cable, A - A, M/M, white, 1.8 m	11.99.8919	100
VALUE USB 2.0 Cable, A - A, M/M, white, 3.0 m	11.99.8931	100
VALUE USB 2.0 Cable, A - A, M/M, white, 4.5 m	11.99.8944	100
VALUE USB 2.0 Cable, A - A, M/F, white, 0.8 m	11.99.8946	50
VALUE USB 2.0 Cable, A - A, M/F, white, 1.8 m	11.99.8949	100
VALUE USB 2.0 Cable, A - A, M/F, white, 3.0 m	11.99.8961	100

ROLINE USB 2.0 Cables

High quality USB cable with one USB Type A and one USB Type B connector.

- Improved shielding
- For the connection of devices with USB Type B connector; e.g. printer
- Meets standard USB 2.0 (transfer rate up to 480 Mbit/s)
- Type: A-B, A-A
- Colour: black

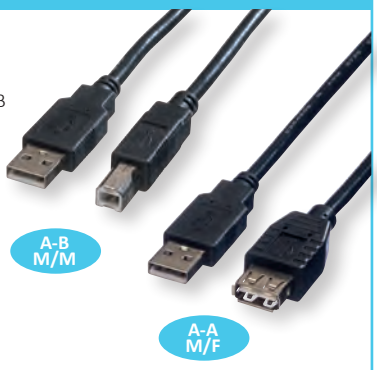

roline®
Designed for Professionals

	Order-No.	P.U.
ROLINE USB 2.0 Cable, A - B, M/M, black, 0.8 m	11.02.8808	50
ROLINE USB 2.0 Cable, A - B, M/M, black, 1.8 m	11.02.8818	100
ROLINE USB 2.0 Cable, A - B, M/M, black, 3.0 m	11.02.8830	100
ROLINE USB 2.0 Cable, A - B, M/M, black, 4.5 m	11.02.8845	100
ROLINE USB 2.0 Cable, A - A, M/M, black, 0.8 m	11.02.8908	50
ROLINE USB 2.0 Cable, A - A, M/M, black, 1.8 m	11.02.8918	100
ROLINE USB 2.0 Cable, A - A, M/M, black, 3.0 m	11.02.8930	100
ROLINE USB 2.0 Cable, A - A, M/M, black, 4.5 m	11.02.8945	100
ROLINE USB 2.0 Cable, A - A, M/F, black, 0.8 m	11.02.8947	50
ROLINE USB 2.0 Cable, A - A, M/F, black, 1.8 m	11.02.8948	100
ROLINE USB 2.0 Cable, A - A, M/F, black, 3.0 m	11.02.8960	100

VALUE USB 2.0 Cables, A - Micro B

- USB Cable with one Type A and one Micro B USB Connector
- Meets standard USB 2.0 (transfer rate up to 480 Mbit/s)
- Colour: white



	Order-No.	P.U.
VALUE USB 2.0 Cable, A - Micro B, M/M, 0.15 m	11.99.8751	50
VALUE USB 2.0 Cable, A - Micro B, M/M, 0.8 m	11.99.8754	10
VALUE USB 2.0 Cable, A - Micro B, M/M, 1.8 m	11.99.8752	10
VALUE USB 2.0 Cable, A - Micro B, M/M, 3.0m	11.99.8755	10
VALUE USB 2.0 Cable, Micro A - Micro B, M/M, 1.8 m	11.99.8753	10

ROLINE USB 2.0 Cables, A - Micro B

High quality USB cable with one Type A and one Micro USB connector.

- Improved shielding
- For the connection of devices with Micro USB connector; e.g. digital cameras / DSLRs or mobile phones / smartphones
- Meets standard USB 2.0 (transfer rate up to 480 Mbit/s)
- Colour: black



	Order-No.	P.U.
ROLINE USB 2.0 Cable, A - Micro B, M/M, 0.15 m	11.02.8310	25
ROLINE USB 2.0 Cable, A - Micro B, M/M, 0.8 m	11.02.8754	10
ROLINE USB 2.0 Cable, A - Micro B, M/M, 1.8 m	11.02.8752	10
ROLINE USB 2.0 Cable, A - Micro B, M/M, 3.0 m	11.02.8755	10
ROLINE USB 2.0 Cable, Micro A - Micro B, M/M, 1.8 m	11.02.8753	10

ROLINE USB 2.0 Flat Cables

USB Flat Cable for connection of an USB peripheral device with the USB port of your PC

- USB Type A-B cable
- Meets standard USB 2.0 (transfer rate up to 480 Mbps)
- Ultra light and flat, stable cable for use with notebooks
- Just hide it e.g. under the carpet
- Colour: black
- Length: up to 1.8m





roline®
Designed for Professionals

	Order-No.	P.U.
ROLINE USB 2.0 Flat Cable, 0.8 m	11.02.8867	10
ROLINE USB 2.0 Flat Cable, 1.8 m	11.02.8868	20

ROLINE USB 2.0 Cables, A - Micro B

- High quality USB cable with one Type A and one Micro USB connector
- For the connection of devices with Micro USB connector; e.g. smartphones / mobile phones, digital cameras / DSLR or other equipment
- Meets standard USB 2.0 (transfer rate up to 480 Mbit/s)
- Elastic and very flexible
- Material: TPE (thermoplastic elastomer)
- Colour: black, white



roline®
Designed for Professionals

	Order-No.	P.U.
ROLINE USB 2.0 Cable, A - Micro B, M/M, black, 1.0 m	11.02.8760	10
ROLINE USB 2.0 Cable, A - Micro B, M/M, white, 1.0 m	11.02.8761	10
ROLINE USB 2.0 Cable, A - Micro B, M/M, pink, 1.0 m	11.02.8762	10

VALUE USB 2.0 Cables, A - 5-Pin Mini

- USB cable with one Type A and one USB 5-pin Mini connector
- Meets standard USB 2.0 (transfer rate up to 480 Mbit/s)
- Colour: white



	Order-No.	P.U.
VALUE USB 2.0 Cable, A - 5-Pin Mini, M/M, white, 0.8 m	11.99.8708	10
VALUE USB 2.0 Cable, A - 5-Pin Mini, M/M, white, 1.8 m	11.99.8718	20
VALUE USB 2.0 Cable, A - 5-Pin Mini, M/M, white, 3.0 m	11.99.8730	10

ROLINE USB 2.0 Cables, A - 5-Pin Mini

- USB cable with one Type A and one USB 5-pin Mini connector
- Meets standard USB 2.0 (transfer rate up to 480 Mbit/s)
- Colour: black



	Order-No.	P.U.
ROLINE USB 2.0 Cable, A - 5-Pin Mini, M/M, black, 0.8 m	11.02.8708	10
ROLINE USB 2.0 Cable, A - 5-Pin Mini, M/M, black, 1.8 m	11.02.8719	20
ROLINE USB 2.0 Cable, A - 5-Pin Mini, M/M, black, 3.0 m	11.02.8730	10

VALUE Lightning to USB Cable for iPhone, iPod, iPad

- Using 8 pins instead of 30, Lightning is significantly more compact than the 30-pin dock connector and can be inserted with either side facing up
- For the connection of devices like the iPhone on from the iPhone 5 that introduced the Lightning connector, as well as for iPods and iPads on from that generation
- This product is only made for devices with Lightning connector! It is NOT compatible with cables and peripherals designed for its predecessor, unless used with an adapter.
- High quality USB cable with one Type A (male) and one Lightning connector
- Improved shielding
- Meets standard USB 2.0 (transfer rate up to 480 Mbit/s)
- Colour: black





Made for iPhone | iPad | iPod

	Order-No.	P.U.
VALUE Lightning to USB Cable for iPhone, iPod, iPad, 0.15 m	11.99.8326	20
VALUE Lightning to USB Cable for iPhone, iPod, iPad, 1.0 m	11.99.8321	20
VALUE Lightning to USB Cable for iPhone, iPod, iPad, 1.8 m	11.99.8322	20

ROLINE Lightning to USB Cable for iPhone, iPod, iPad

- Using 8 pins instead of 30, Lightning is significantly more compact than the 30-pin dock connector and can be inserted with either side facing up
- For the connection of devices like the iPhone on from the iPhone 5 that introduced the Lightning connector, as well as for iPods and iPads on from that generation
- This product is only made for devices with Lightning connector! It is NOT compatible with cables and peripherals designed for its predecessor, unless used with an adapter.
- High quality USB cable with one Type A (male) and one Lightning connector
- Improved shielding
- Meets standard USB 2.0 (transfer rate up to 480 Mbit/s)
- Colour: white



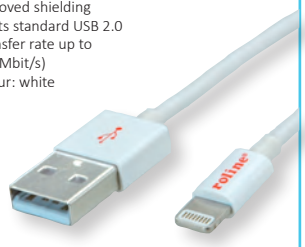

Made for iPhone | iPad | iPod

	Order-No.	P.U.
ROLINE Lightning to USB Cable for iPhone, iPod, iPad, white, 0.15 m	11.02.8326	20
ROLINE Lightning to USB Cable for iPhone, iPod, iPad, white, 1.0 m	11.02.8321	20
ROLINE Lightning to USB Cable for iPhone, iPod, iPad, white, 1.8 m	11.02.8322	20

ROLINE USB Type C Sync & Charge Cable for Apple Devices with Lightning Connector

USB Type C sync & charging cable for Apple devices with Lightning plug - ideal for transferring data from iPhone/ iPad to Mac/MacBook!

- USB Type C cable with MFI certified Apple Lightning connector for all newer iPhones and iPads (except iPad Pro)
- For connecting devices with Lightning jack to Mac/MacBook, PCs, Ultrabooks or other devices with USB Type C port
- Enables wired charging and data exchange
- Colour: white





Made for iPhone | iPad | iPod

	Order-No.	P.U.
ROLINE USB Type C Sync & Charge Cable for Apple Devices with Lightning Connector, white, 1.0 m	11.02.8323	10

ROLINE 8pin + MicroB + Type C to USB Charge & Sync Cable

Connect almost all popular smartphones or tablets via Apple Lightning, USB Type C or USB Micro B plug to e.g. your PC or charger - suitable for loading and for data transfers!

- USB 2.0 cable with one USB Type A connector and one Apple Lightning (8pin), USB Micro B and USB Type C connector each
- For the connection of devices with Apple Lightning or Micro USB / USB Type C socket- so almost all common smartphones or tablets can be connected!
- With the revolutionary USB Type C connector you are prepared for future generations of devices.
- Complies with USB 2.0 standard (transmission up to 480 Mbit/s)
- Allows loading of mobile devices and data exchange





Made for iPhone | iPad | iPod

	Order-No.	P.U.
ROLINE 8pin + MicroB + Type C to USB Charge & Sync Cable, white, 1.0 m	11.02.8329	10

ROLINE USB 2.0 Spiral Cable, A - Micro B

High quality USB cable with one Type A and one Micro USB connector

- Improved shielding
- For the connection of devices with Micro USB connector; e.g. smartphones / mobile phones or digital cameras / DSLR
- Meets standard USB 2.0 (transfer rate up to 480 Mbit/s)
- Colour: black



	Order-No.	P.U.
ROLINE USB 2.0 Spiral Cable, A - Micro B, M/M, 1.0 m	11.02.8317	10

VALUE/ROLINE USB 2.0 Cables, OTG

- High quality USB cable with one Type A (female) and one Micro B USB connector
- For the connection of devices with Micro USB connector; e.g. digital cameras, mobile phones, MP3 players or PDAs
- Not suitable for Samsung Galaxy S3 mini (GT-I8190)
- Meets standard USB 2.0 (transfer rate up to 480 Mbit/s)
- Colour: black



Value® roline® Designed for Professionals

	Order-No. – P.U.
VALUE USB 2.0 Cable, A - Micro B, F/M, OTG, 0.15 m	11.99.8311 – 100
ROLINE USB 2.0 Cable, A - Micro B, F/M, OTG, 0.15 m	11.02.8311 – 25

USB 2.0 Charging Cables, Micro B - Micro B

Charging cable for USB devices with USB Micro B connector
- To connect an USB device with USB Micro B to another device with USB Micro B connector for charging
- Only charging, no data transfer
- Not suitable for NOKIA or BLACKBERRY
- Color: white/black
- Length: 0,3m

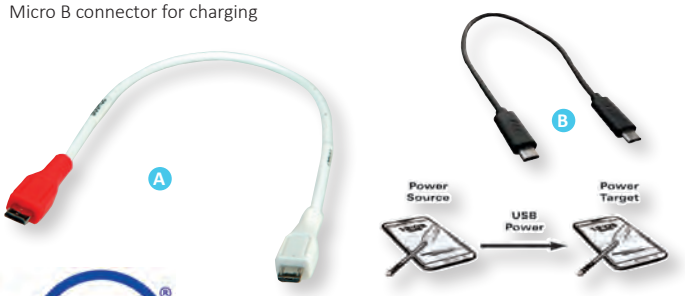

Value® roline® Designed for Professionals

		Order-No. – P.U.
VALUE USB 2.0 Charging Cable, Micro B - Micro B, M/M, 0.3m	A	11.99.8307 – 25
ROLINE USB 2.0 Charging Cable, Micro B - Micro B, M/M, 0.3m	B	11.02.8307 – 10

ROLINE USB 2.0 LED Charging Cable

- For Power Charging, Data Sync and Data Transfer
- LED lighting effect lets you know your device is charging (RED color while charging, continuous BLUE color when the charging process is finished)
- Supports data transfer- you can move music, pictures, videos and any other files to and from your device
- Cable design prevents kinks, knots or tangles in the cable
- Color: black



roline® Designed for Professionals

	Order-No. – P.U.
ROLINE USB 2.0 LED Charging Cable, A - Micro B, M/M, 1.0 m	11.02.8318 – 10

ROLINE USB 2.0 Cables, A - Micro B (reversible)

High quality USB cable with one Type A and one reversible Micro USB connector.
- Improved shielding
- For the connection of devices with Micro USB connector; e.g. smartphones / mobile phones or digital cameras / DSLR
- Meets standard USB 2.0 (transfer rate up to 480 Mbit/s)

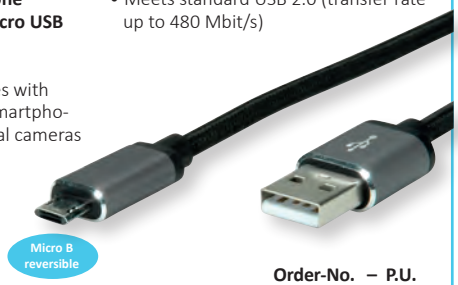

roline® Designed for Professionals

	Order-No. – P.U.
ROLINE USB 2.0 Cable, A - Micro B (reversible), M/M, 0.8 m	11.02.8770 – 10
ROLINE USB 2.0 Cable, A - Micro B (reversible), M/M, 1.8 m	11.02.8771 – 10
ROLINE USB 2.0 Cable, A - Micro B (reversible), M/M, 3.0 m	11.02.8772 – 10

ROLINE USB 2.0 Cables, A reversible - Micro B (90° angled)

To connect smartphones, Tablets, external hard drives (HDD/SSD) and other USB devices to your PC, laptop or charger with USB Micro B connection - both connectors are angled!
- Improved shielding
- For the connection of devices with Micro USB connector; e.g. smartphones / mobile phones or digital cameras / DSLR
- Meets standard USB 2.0 (transfer rate up to 480 Mbit/s)
- Special feature: 90° angled Micro B connector and reversible Type A connector
- Colour: black

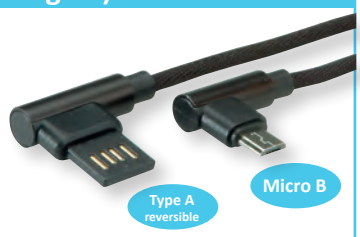

roline® Designed for Professionals

	Order-No. – P.U.
ROLINE USB 2.0 Cable, A reversible - Micro B (90° angled), M/M, 0.8 m	11.02.8720 – 10
ROLINE USB 2.0 Cable, A reversible - Micro B (90° angled), M/M, 1.8 m	11.02.8721 – 10
ROLINE USB 2.0 Cable, A reversible - Micro B (90° angled), M/M, 3.0 m	11.02.8722 – 10

ROLINE USB 2.0 Cables, C - A

For connecting smartphones or tablets with USB Type C connection to a wall charger or e.g. for connection of hard disks (HDD/SSD) and other end devices.
- USB 2.0 connection cable with Type A to Type C male/male connector
- Suitable for data transfer rates of up to 480 Mbit/s
- Connectors: 1x USB Type A connector, 1x USB type C connector
- Color: silver/ black



roline® Designed for Professionals

	Order-No. – P.U.
ROLINE USB 2.0 Cable, C - A, M/M, black, 0.8 m	11.02.9027 – 10
ROLINE USB 2.0 Cable, C - A, M/M, black, 1.8 m	11.02.9028 – 10
ROLINE USB 2.0 Cable, C - A, M/M, black, 3.0 m	11.02.9029 – 10

ROLINE USB 2.0 Cables, C (90° angled) - A reversible

To connect smartphones, Tablets, external hard drives (HDD/SSD) and other USB devices to your PC, laptop or charger with the new USB Type C connection - both connectors are angled!
- USB 2.0 connection cable with Type A to Type C male/male connector (L-Shape, 90° angled)
- Suitable for data transfer rates of up to 480 Mbit/s
- Connectors: 1x USB Type A connector, 1x USB type C (L-Shape, 90° angled) connector
- Color: black



roline® Designed for Professionals

	Order-No. – P.U.
ROLINE USB 2.0 Cable, C (90° angled) - A reversible, M/M, black, 0.8 m	11.02.9035 – 10
ROLINE USB 2.0 Cable, C (90° angled) - A reversible, M/M, black, 1.8 m	11.02.9036 – 10
ROLINE USB 2.0 Cable, C (90° angled) - A reversible, M/M, black, 3.0 m	11.02.9037 – 10

ROLINE Cable USB Micro B + Type C M/M to USB2.0 A M

USB 2.0 cable with 2-in1 connector
- USB Type C and Micro B combo allows the cable to perform 2-in-1 functionality
- Allows you to transfer data from your mobile device
- Connect the cable to your Smartphone or tablet and charge your device by connecting the USB connector into your wall charger or transfer data by connecting it with your computer
- The one end of the cable is equipped with a Micro USB B plug, alternatively by an attachment with a type C connector, the second side has a type A connector
- Complies with the standard USB 2.0 (transmission up to 480 Mbit/s)
- Color: black



	Order-No. – P.U.
ROLINE Cable USB Micro B + Type C M/M to USB2.0 A M, black, 1.0 m	11.02.8328 – 10

roline® Designed for Professionals

ROLINE USB Type A Port Blocker

Protect unused USB Type A sockets against unauthorized use. The mounting tool, which also serves as a key for the USB plugs, provides additional security.

- Reduces the risk of data leakage / theft and unauthorised uploads of software / malware
- Suitable for IT equipment in any office or public environment, like schools, museums, exhibitions or other places
- Causes no conflict with the existing IT structure
- Reduces the cost of maintenance and control of the IT equipment
- Blocks the access to a USB port physically
- Quick and simple to use
- Set with 4 locks and 1 key
- **Optional - set of 10 pieces - only USB blocker without key, to be ordered separately**



	Order-No. – P.U.
ROLINE USB Type A Port Blocker, 4x lock and 1x key	11.02.8330 – 10
ROLINE USB Port Lock / Blocker 10x USB for 11.02.8330	11.02.8331 – 10

roline® Designed for Professionals

ROLINE USB Type A Data Lane Blocker

The USB Type A Port Blocker blocks the data lanes of the used USB port and thus protects your end device from unwanted access or malware - nothing but power is transmitted. The solution is especially useful in foreign environments where USB sockets can be manipulated or hijacked comparatively easily, such as in hotels, or anchorage points like airports or train stations.

- Eliminates the risk of becoming the target of attacks via foreign USB sockets and reduces the risk of malware / malicious software being transferred to the device
- Suitable for IT equipment in any hotel, office or public environment such as schools, museums, trade fairs or other places
- Ideally suited for anchor points such as airports and railway stations
- Does not cause conflict with the existing IT infrastructure
- Prevents data exchange by blocking the data lanes- only power is transmitted to your end device
- Safe charging without complications
- Contents: 1x USB Data Blocker

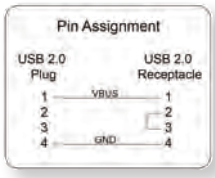





	Order-No. – P.U.
ROLINE USB Type A Data Lane Blocker	11.02.8332 – 10

roline® Designed for Professionals

ROLINE USB Type C Port Blocker

Protect unused USB Type C sockets against unauthorized use. The mounting tool, which also serves as a key for the USB plugs, provides additional security.

- Reduces the risk of data leakage / theft and unauthorised uploads of software / malware
- Suitable for IT equipment in any office or public environment, like schools, museums, exhibitions or other places
- Causes no conflict with the existing IT structure
- Reduces the cost of maintenance and control of the IT equipment
- Blocks the access to a USB port physically
- Quick and simple to use
- Set with 1 lock and 1 key
- Optional- set of 10 pieces- only USB blocker without key, to be ordered separately





	Order-No. – P.U.
ROLINE USB Type C Port Blocker, 1x lock and 1x key	11.02.8333 – 10
ROLINE USB Port Lock / Blocker 10x USB for 11.02.8333	11.02.8334 – 10

roline® Designed for Professionals

VALUE USB 2.0 Extension Cables

- Supports USB 2.0
- The cable extends the distance of a USB 2.0 device by 5 m
- Meets USB 2.0 specifications and works with low-speed, high-speed and full-speed devices
- Hot-pluggable
- Cable length: 5 m

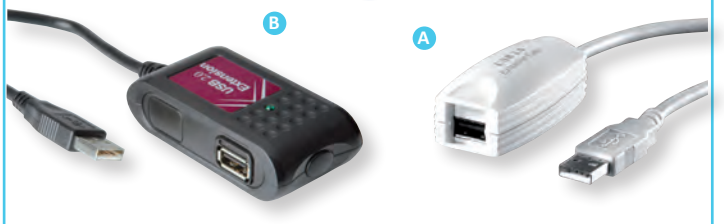

		Order-No.	P.U.
VALUE USB 2.0 Extender, 1 Port, white, 5.0 m	A	12.99.1100	10
VALUE USB 2.0 Extender, 2 Ports, black, 5.0 m	B	12.99.1089	10

ROLINE USB 2.0 Extension Cables

- Supports USB 2.0
- The cable extends the distance of a USB 2.0 device by 5 m
- The cable acts as a single port hub, which means that multiple cables can be cascaded to increase the distance between your computer and USB 2.0 devices
- Meets USB 2.0 specifications and works with low-speed, high-speed and full-speed devices
- Hot-pluggable
- Contents: Cable



		Order-No.	P.U.
ROLINE USB 2.0 Extension Cable, 1 Port, white, 5.0 m	A	12.04.1088	10
ROLINE USB 2.0 Extension Cable, 1 Port, black, 5.0 m	B	12.04.1089	10

VALUE USB 2.0 Extension Cables, Active

- Supports USB 2.0
- The cable extends the distance of a USB 2.0 device by 12 m / 30m
- Meets USB 2.0 specifications and works with low-speed, high-speed and full-speed devices
- Hot-pluggable
- Cable length: 12 m / 30m

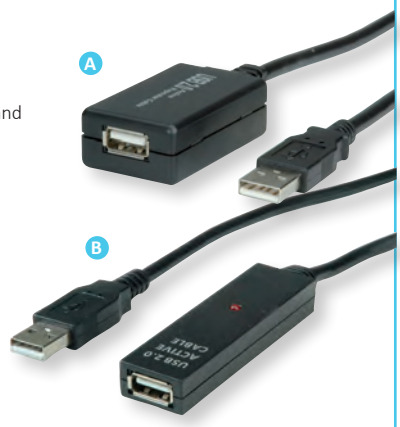

		Order-No.	P.U.
VALUE USB 2.0 Extension Cable, active, with Repeater, 12.0 m	A	12.99.1110	10
VALUE USB 2.0 Extension Cable, active, with Repeater, 30.0 m	B	12.99.1111	5

ROLINE USB 2.0 Extension Cable, Active

- Active USB extension cable- ensures good signal quality to meet USB specifition, even over a distance of 15 meters
- Active USB extension cable
- Compliant with USB 2.0
- Supports data transfer rates of up to 480 Mbit/s
- Cable length: 15 m
- Connectors: USB type A M to USB type A F
- Hot-swappable, plug & play, no drivers required
- Power supply over USB port from the PC
- Supported operating systems: Windows 98SE / 2000 / XP / Vista / 7, Mac OS X
- Contents: Cable



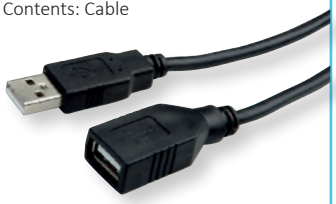

	Order-No.	P.U.
ROLINE USB 2.0 Extension Cable, active, 15 m	12.04.1091	5

VALUE USB 2.0 Extension Cable, Active with Repeater, A - C

Active USB 2.0 extension cable with Type C connector and Type A socket for connecting a MacBook/Ultrabook to an external hard disk (SSD/HDD) or a printer.

- Supports USB 2.0
- The cable extends the distance of a USB 2.0 device by up to 20 m
- Meets USB 2.0 specifications and works with low-speed, high-speed and full-speed devices
- Hot-pluggable
- Cable length: 10 / 15 / 20 m



	Order-No.	P.U.
VALUE USB 2.0 Extension Cable, Active with Repeater, A - C, 10 m	12.99.1112	10
VALUE USB 2.0 Extension Cable, Active with Repeater, A - C, 15 m	12.99.1113	10
VALUE USB 2.0 Extension Cable, Active with Repeater, A - C, 20 m	12.99.1114	10

ROLINE USB 2.0 Hub with Repeater

This hub with an active repeater cable extends the distance between the hub and the computer up to 12 m.
With its unique design, this hub can lock to USB 2.0 Active Repeater Cable 12.04.1086 by clipping- which offers another 12 m of length- between USB A Male and Female end. With up to 5 of this hub & USB Active Repeater Cables chained together, you can reach for a maximum distance up to 60 meters.

- 4x USB 2.0 ports
- Full compliance with USB 2.0 / 1.1 specification
- Plug & play. no additional drivers required
- Cable length: 12 m
- Housing dimensions: 81.7 x 41 x 16.7 mm
- Connectors: 1x USB Type A Male and 4x USB Type A Female
- Supports Windows
- Contents: Cable

roline
Designed for Professionals



	Order-No.	– P.U.
ROLINE USB 2.0 Hub, 4 Ports, with Repeater, 12.0 m	12.04.1085	– 10
ROLINE USB 2.0 Active Repeater Cable for 12.04.1085, 12.0 m	12.04.1086	– 10

VALUE USB 1.1 Extender over RJ-45

- Allows you to extend the connection to a USB peripheral device up to 45 meters by using a Cat.5e/6 patch cable
- Applications: e.g. WEB camera, surveillance camera, scanner, printer
- Compliant with USB 1.1
- Supports full-speed (12 Mbit/s) or low-speed (1.5 Mbit/s) USB devices
- Supports Windows 98SE/2000/XP/Vista
- Contents: Master unit (RJ-45 Female; USB Type A Male with 10 cm cable), remote unit (RJ-45 Female; USB Type A Female with 10 cm cable)
- Contents: Master Unit, Remote Unit



Value

	Order-No.	– P.U.
VALUE USB 1.1 Extender over RJ-45	12.99.1121	– 10

VALUE USB 2.0 Extender over RJ-45, max. 50m

Use this USB 2.0 extender in combination with a RJ45 cable to extend your USB connection up to 50m!

- Extend your USB port over RJ-45 (up to 50 meters)
- For example to connect an USB printer in another room with your PC
- Supports USB 2.0, downwards compatible with USB 1.1/1.0
- Hot plug
- No additional software for extender required
- Connection via Cat.5e/Cat. 6 Twisted Pair cable
- Transmitter: USB A Male connector/ RJ-45,
  Receiver: USB A Female connector/ RJ-45
- Supports data rates up to 480Mbit/s
- Contents: Master unit (RJ-45 Female; USB Type A Male with 21 cm cable), remote unit (RJ-45 Female; USB Type A Female)



Value

	Order-No.	– P.U.
VALUE USB 2.0 Extender over RJ-45, max. 50m	12.99.1123	– 5

ROLINE USB 2.0 Extender over RJ-45, max. 50m

- Extend your USB port over RJ-45 (up to 50 meters)
- For example to connect an USB printer in another room with your PC
- Supports USB 2.0, downwards compatible with USB 1.1/1.0
- Hot plug
- No additional software for extender required
- Connection via Cat.5e/Cat. 6 Twisted Pair cable
- Supports data rates up to 480Mbit/s



roline
Designed for Professionals

		Order-No.	– P.U.
ROLINE USB 2.0 Extender over RJ-45, max. 50m	A	12.04.1100	– 5
ROLINE USB 2.0 Extender over RJ-45, PoC, 1x USB, max. 50m	B	12.04.1102	– 4
ROLINE USB 2.0 Extender over RJ-45, PoC, 4x USB, max. 50m	C	12.04.1101	– 4

ROLINE USB 3.2 Gen 1 Hub with Repeater

This hub with an active repeater cable extends the distance between the hub and the computer up to 10 m.

- 4x USB 3.2 Gen 1 ports
- Full compliance with USB 2.0 / 1.1 specification
- Plug & play. no additional drivers required
- USB Bus powered
- Cable length: 10 m
- Housing dimensions: 81 x 40 x 17 mm
- Connectors: 1x USB Type A Male and 4x USB Type A Female
- Supports Windows XP / 7
- Power adapter (5V/3.5A, included) for heavy power consumption devices
- Contents: Cable

roline
Designed for Professionals



	Order-No.	– P.U.
ROLINE USB 3.2 Gen 1 Hub, 4 Ports, with Repeater, 10.0 m	12.04.1097	– 4

ROLINE USB 3.2 Gen 1 Active Repeater Cable

Extends the connection distance of an external HDD, hub, printer, scanner or other USB 3 device to your computer by 5 meters.

- Active USB extension cable - ensures good signal quality
- Compliant with SuperSpeed USB 3.2 Gen 1, USB 2.0, USB 1.1
- Supports data rates up to 5 Gbit/s
- Plug & play
- Supported Operating Systems: Windows 2000/XP/Vista/7, Mac OS
- Contents: USB Active repeater cable



roline
Designed for Professionals

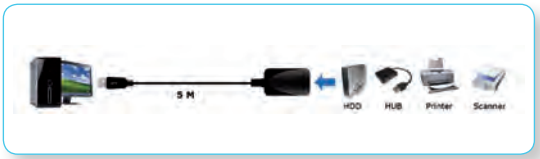

	Order-No.	– P.U.
ROLINE USB 3.2 Gen 1 Active Repeater Cable, black, 5.0 m	12.04.1096	– 8

ROLINE USB 3.2 Gen 1 Active Repeater Cables

Active USB 3.0 / USB 3.2 Gen 1 extension cable - for data rates up to 5 Gbit/s over a distance of 20m!

- Active USB extension cable - ensures good signal quality
- Compliant with SuperSpeed USB 3.2 Gen 1, USB 2.0, USB 1.1
- Supports data rates up to 5 Gbit/s
- Plug & play
- Supported Operating Systems: Windows 2000 / XP / Vista/ 7 / 8 / 10, Mac OS
- Contents: USB 3.2 Gen 1 Active repeater cable

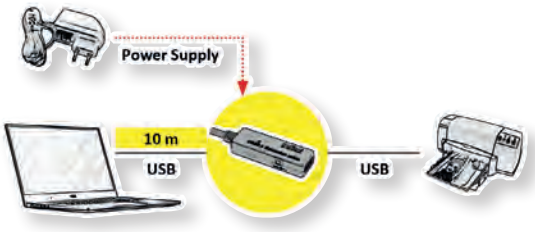





	Order-No. – P.U.
ROLINE USB 3.2 Gen 1 Active Repeater Cable, black, 10 m	12.04.1070 – 5
ROLINE USB 3.2 Gen 1 Active Repeater Cable, black, 15 m	12.04.1071 – 5
ROLINE USB 3.2 Gen 1 Active Repeater Cable, black, 20 m	12.04.1072 – 5

roline®
Designed for Professionals

VALUE USB 3.2 Gen 1 „DOME“ Cable

- Brings your computer‘s USB port directly on your desktop
- Two USB 3.0 / USB 3.2 Gen 1 ports: One for data, one for power/charging
- Supports SuperSpeed USB 3.2 Gen 1 with data rates of up to 5 Gbit/s
- Backwards compatible with USB 2.0, USB 1.1
- Integrated magnet, which allows you to „stick“ it on metal surfaces or furniture

Note: According to the current specifications of USB.org we have adapted the technical data of our USB 3 products. The new designation for the already known USB specifications has been changed to USB 3.2 Gen 1 (formerly USB 3.0 / USB 3.1 Gen 1) and USB 3.2 Gen 2 (formerly USB 3.1 / USB 3.1 Gen 2).



	Order-No. – P.U.
VALUE USB 3.2 Gen 1 „DOME“ Cable, black, 1.5 m	11.99.8999 – 12

Value®

ROLINE USB 3.2 Gen 1 Cable, A-C

ROLINE USB 3.0 / USB 3.2 Gen 1 silicone cable with data transfer rates of up to 5 Gbit/s. The silicone-sheathed flat cable not only looks great, but also allows extremely flexible usage thanks to its small bending radius.

Note: According to the current specifications of USB.org we have adapted the technical data of our USB 3 products. The new designation for the already known USB specifications has been changed to USB 3.2 Gen 1 (formerly USB 3.0 / USB 3.1 Gen 1) and USB 3.2 Gen 2 (formerly USB 3.1 / USB 3.1 Gen 2).

- USB 3.0 / USB 3.2 Gen 1 cable in high quality
- With USB Type C and a classic USB Type A plug
- Suitable for data transfer rates of up to 5 Gbit/s
- Rugged aluminum plugs and a flexible, flat silicone cable for optimal durability
- Type: A - C
- Length: 11 cm
- Colour: black



	Order-No. – P.U.
ROLINE USB 3.2 Gen 1 Cable, A-C, M/M, black, 11 cm	11.02.9014 – 10

roline®
Designed for Professionals

ROLINE USB 3.2 Gen 2 Cable, PD (Power Delivery) 20V3A, with Emark, C-C, M/M

ROLINE USB 3.1 / USB 3.2 Gen 2 silicone cable with data transfer rates of up to 10 Gbit/s and support of PD (Power Delivery) at up to 20V3A. The silicone-sheathed flat cable not only looks great, but also allows extremely flexible use thanks to its small bending radius.

- High quality USB 3.1 / USB 3.2 Gen 2 cable with improved shielding
- With the new reversible Type C connectors at both ends
- Gold-plated contacts for low wear at high plugging cycles
- Suitable for data transfer rates of up to 10 Gbit/s
- Supports USB Power Delivery to 20V / 3A

Note: According to the current specifications of USB.org we have adapted the technical data of our USB 3 products. The new designation for the already known USB specifications has been changed to USB 3.2 Gen 1 (formerly USB 3.0 / USB 3.1 Gen 1) and USB 3.2 Gen 2 (formerly USB 3.1 / USB 3.1 Gen 2).



	Order-No. – P.U.
ROLINE USB 3.2 Gen 2 Cable, PD (Power Delivery) 20V3A, with Emark, C-C, M/M, black, 11 cm	11.02.9054 – 10

roline®
Designed for Professionals

VALUE USB 3.2 Gen 1 SuperSpeed Cables

A new major feature of USB 3.0 / USB 3.2 Gen 1 is SuperSpeed bus, which increases the maximum transfer rate to 5.0 Gbit/s. USB 3.2 Gen 1 receptacles are partly compatible with USB 2.0 device plugs for the respective physical form factors. The cables can be used with PCs with the actual Type A F.

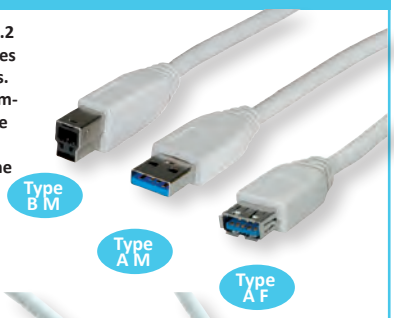

• Color: white



	Order-No. – P.U.
VALUE USB 3.2 Gen 1 Cable, A - B, M/M, 0.8 m	11.99.8869 – 10
VALUE USB 3.2 Gen 1 Cable, A - B, M/M, 1.8 m	11.99.8870 – 50
VALUE USB 3.2 Gen 1 Cable, A - B, M/M, 3.0 m	11.99.8871 – 50
VALUE USB 3.2 Gen 1 Cable, A - A, M/M, 1.8 m	11.99.8975 – 50
VALUE USB 3.2 Gen 1 Cable, A - A, M/M, 3.0 m	11.99.8976 – 50
VALUE USB 3.2 Gen 1 Cable, A - A, M/F, 0.8 m	11.99.8977 – 50
VALUE USB 3.2 Gen 1 Cable, A - A, M/F, 1.8 m	11.99.8978 – 50
VALUE USB 3.2 Gen 1 Cable, A - Micro B, M/M, 0.15 m	11.99.8876 – 10
VALUE USB 3.2 Gen 1 Cable, A - Micro B, M/M, 0.8 m	11.99.8873 – 10
VALUE USB 3.2 Gen 1 Cable, A - Micro B, M/M, 2.0 m	11.99.8875 – 10
VALUE USB 3.2 Gen 1 Cable, A - Micro B, M/M, 3.0 m	11.99.8877 – 10

ROLINE USB 3.2 Gen 1 SuperSpeed Cables

USB 3.0 / USB 3.2 Gen 1 SuperSpeed cables with high quality and improved shielding for transfer rates of up to 5 Gbit/s. USB 3.2 Gen 1 receptacles are partly compatible with USB 2.0 device plugs for the respective physical form factors. The cables can be used with PCs with the actual type A interface. The new USB 3.2 Gen 1 Type B connectors are not downwards compatible.

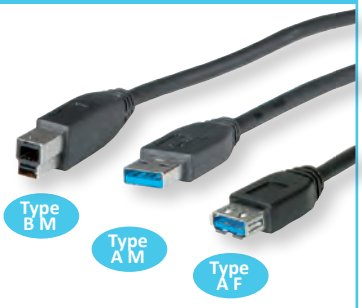

• Colour: black

roline®
Designed for Professionals

	Order-No. – P.U.
ROLINE USB 3.2 Gen 1 Cable, A - B, M/M, 0.8 m	11.02.8869 – 10
ROLINE USB 3.2 Gen 1 Cable, A - B, M/M, 1.8 m	11.02.8870 – 50
ROLINE USB 3.2 Gen 1 Cable, A - B, M/M, 3.0 m	11.02.8871 – 50
ROLINE USB 3.2 Gen 1 Cable, A - A, M/M, 1.8 m	11.02.8970 – 50
ROLINE USB 3.2 Gen 1 Cable, A - A, M/M, 3.0 m	11.02.8971 – 50
ROLINE USB 3.2 Gen 1 Cable, A - A, M/F, 0.8 m	11.02.8977 – 50
ROLINE USB 3.2 Gen 1 Cable, A - A, M/F, 1.8 m	11.02.8978 – 50
ROLINE USB 3.2 Gen 1 Cable, A - Micro A, M/M, 0.8 m	11.02.8872 – 10
ROLINE USB 3.2 Gen 1 Cable, A - Micro A, M/M, 2.0 m	11.02.8874 – 10
ROLINE USB 3.2 Gen 1 Cable, A - Micro B, M/M, 0.15 m	11.02.8876 – 25
ROLINE USB 3.2 Gen 1 Cable, A - Micro B, M/M, 0.8 m	11.02.8873 – 10
ROLINE USB 3.2 Gen 1 Cable, A - Micro B, M/M, 2.0 m	11.02.8875 – 10
ROLINE USB 3.2 Gen 1 Cable, A - Micro B, M/M, 3.0 m	11.02.8877 – 10

VALUE USB 3.2 Gen 1 Cables

The new SuperSpeed specification adds a 5 Gbit/s speed mode that uses a more efficient data encoding and will deliver more than twice the effective data through-put performance of existing SuperSpeed USB over enhanced, fully backward compatible USB connectors and cables.

- High quality cable with improved shielding
- With the new reversible Type C connectors at both ends
- Gold-plated contacts for low wear at high plugging cycles
- Suitable for data transfer rates of up to 5 Gbit/s
- Only suitable for USB standard power supply up to 5V/900mA!



	Order-No. – P.U.
VALUE USB 3.2 Gen 1 Cable, A-C, M/M, 0.5 m	11.99.9010 – 20
VALUE USB 3.2 Gen 1 Cable, A-C, M/M, 1 m	11.99.9011 – 10

ROLINE USB 3.2 Gen 1 Cables

The new SuperSpeed specification adds a 5 Gbit/s speed mode that uses a more efficient data encoding and will deliver more than twice the effective data through-put performance of existing SuperSpeed USB over enhanced, fully backward compatible USB connectors and cables.

- High quality cable with improved shielding
- With the new reversible Type C connectors at both ends
- Gold-plated contacts for low wear at high plugging cycles
- Suitable for data transfer rates of up to 5 Gbit/s
- Only suitable for USB standard power supply up to 5V/900mA!

roline®
Designed for Professionals



	Order-No. – P.U.
ROLINE USB 3.2 Gen 1 Cable, A-C, M/M, black, 0.5 m	11.02.9010 – 20
ROLINE USB 3.2 Gen 1 Cable, A-C, M/M, black, 1.0 m	11.02.9011 – 10

VALUE USB 3.2 Gen 2 Cable, PD (Power Delivery) 20V5A, with Emark, C-C

Full-featured USB 3.2 Gen 2 cable, including TID and with a data transmission rate of up to 10 Gbit/s and full Power Delivery support of up to 20V 5A!

- High quality cable with improved shielding
- With the new reversible Type C connectors at both ends
- Gold-plated contacts for low wear at high plugging cycles
- Suitable for data transfer rates of up to 10 Gbit/s
- Supports USB Power Delivery to 20V / 5A



	Order-No. – P.U.
VALUE USB 3.2 Gen 2 Cable, PD 20V5A, with Emark, C-C, 0.5 m	11.99.9052 – 20
VALUE USB 3.2 Gen 2 Cable, PD 20V5A, with Emark, C-C, 1.0 m	11.99.9053 – 10

ROLINE USB 3.2 Gen 2 Cable, PD (Power Delivery) 20V5A, with Emark, C-C

Full-featured USB 3.2 Gen 2 cable, including TID and with a data transmission rate of up to 10 Gbit/s and full Power Delivery support of up to 20V 5A!

- High quality cable with improved shielding
- With the new reversible Type C connectors at both ends
- Gold-plated contacts for low wear at high plugging cycles
- Suitable for data transfer rates of up to 10 Gbit/s
- Supports USB Power Delivery to 20V / 5A

roline®
Designed for Professionals

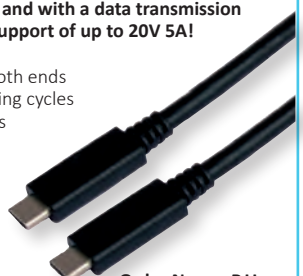

	Order-No. – P.U.
ROLINE USB 3.2 Gen 2 Cable, PD 20V5A, with Emark, C-C, 0.5 m	11.02.9052 – 20
ROLINE USB 3.2 Gen 2 Cable, PD 20V5A, with Emark, C-C, 1.0 m	11.02.9053 – 10

ROLINE USB 3.2 Gen 2x2 Cable, PD (Power Delivery) 20V5A, with Emark, C-C, 20 Gbit/s

NEW

USB 3.2 Gen 2x2 cable with up to 20 Gbit/s speed mode that uses a more efficient data encoding and will deliver more than twice the effective data through-put performance of existing, fully backward compatible USB connectors and cables.

- High quality USB 3.1 / USB 3.2 Gen 2x2 cable with improved shielding
- With the reversible Type C connectors at both ends
- Gold-plated contacts for low wear at high plugging cycles
- Suitable for data transfer rates of up to 20 Gbit/s
- Supports USB Power Delivery to 20V / 5A

Note: According to the current specifications of USB.org we have adapted the technical data of our USB 3 products. The new designation for the already known USB specifications has been changed to USB 3.2 Gen 1 (formerly USB 3.0 / USB 3.1 Gen 1) and USB 3.2 Gen 2 (formerly USB 3.1 / USB 3.1 Gen 2).



	Order-No.	–	P.U.
ROLINE USB 3.2 Gen 2x2 Cable, PD (Power Delivery) 20V5A, with Emark, C-C, M/M, black, 0.5 m	11.02.9070	–	10
ROLINE USB 3.2 Gen 2x2 Cable, PD (Power Delivery) 20V5A, with Emark, C-C, M/M, black, 1 m	11.02.9071	–	10
ROLINE USB 3.2 Gen 2x2 Cable, PD (Power Delivery) 20V5A, with Emark, C-C, M/M, black, 1.5 m	11.02.9072	–	10

roline®
Designed for Professionals

VALUE USB4 Gen 3 Cable, PD (Power Delivery) 20V5A, with Emark, C-C, 40 Gbit/s

NEW

The major benefits of the USB4 includes faster transfer speeds (up to 40 Gbit/s), a better management of video bandwidth (using a process called „protocol tunneling“ that sends DisplayPort, PCIe and USB packets at the same time while allocating bandwidth accordingly) and optional compatibility with Thunderbolt 3 products.

- High quality USB4 Gen 3 cable with improved shielding
- With the reversible Type C connectors at both ends
- Gold-plated contacts for low wear at high plugging cycles
- Suitable for data transfer rates of up to 40 Gbit/s
- Supports USB Power Delivery to 20V / 5A



	Order-No.	–	P.U.
VALUE USB4 Gen 3 Cable, PD (Power Delivery) 20V5A, with Emark, C-C, M/M, black, 0.5 m	11.99.9080	–	5
VALUE USB4 Gen 3 Cable, PD (Power Delivery) 20V5A, with Emark, C-C, M/M, black, 0.8 m	11.99.9081	–	5

Value®

ROLINE USB4 Gen 3 Cable, PD (Power Delivery) 20V5A, with Emark, C-C, 40 Gbit/s

NEW

The major benefits of the USB4 includes faster transfer speeds (up to 40 Gbit/s), a better management of video bandwidth (using a process called „protocol tunneling“ that sends DisplayPort, PCIe and USB packets at the same time while allocating bandwidth accordingly) and optional compatibility with Thunderbolt 3 products.

- High quality USB4 Gen 3 cable with improved shielding
- With the reversible Type C connectors at both ends
- Gold-plated contacts for low wear at high plugging cycles
- Suitable for data transfer rates of up to 40 Gbit/s
- Supports USB Power Delivery to 20V / 5A



	Order-No.	–	P.U.
ROLINE USB4 Gen 3 Cable, PD (Power Delivery) 20V5A, with Emark, C-C, M/M, black, 0.5 m	11.02.9080	–	5
ROLINE USB4 Gen 3 Cable, PD (Power Delivery) 20V5A, with Emark, C-C, M/M, black, 0.8 m	11.02.9081	–	5

roline®
Designed for Professionals

VALUE / ROLINE USB Adapters

Use these adapters/cableadapters to easily connect your smartphone or tablet with USB Micro B with a charger or other suitable devices, like MacBooks, Ultrabooks, Notebooks/Laptops or PCs

• Colour: black /white

Note: According to the current specifications of USB.org we have adapted the technical data of our USB 3 products. The new designation for the already known USB specifications has been changed to USB 3.2 Gen 1 (formerly USB 3.0 / USB 3.1 Gen 1) and USB 3.2 Gen 2 (formerly USB 3.1 / USB 3.1 Gen 2).

roline® Designed for Professionals

Value®



12.99.3192



12.03.2995



12.99.3191



12.99.2997



12.99.9030



12.99.2996 / 12.03.2996



12.99.2998

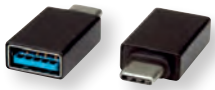

12.03.2997



12.99.3190



11.99.9030



11.02.9030



11.02.9031



11.02.9015



11.02.9005



12.99.2995

Brand	Order-No. – P.U.	Adapter / Cableaadapter	Compliant	Type	Connector	Functionality	Length	Color
VALUE	12.99.3192 – 25	Adapter	USB 2.0	Micro B - C	M/F		–	black
ROLINE	12.03.2995 – 10	Adapter	USB 3.2 Gen 1	A - C	M/F		–	black
VALUE	12.99.3191 – 25	Adapter	USB 2.0	C - Micro B	M/F		–	black
VALUE	12.99.2997 – 20	Gender Changer	USB 3.2 Gen 1	A - A	F/F		–	black
VALUE	12.99.9030 – 25	Adapter	USB 3.2 Gen 1	C - A	M/F	OTG	–	black
VALUE	12.99.2996 – 25	Adapter	USB 3.2 Gen 2	C - C	M/F, 90°		–	black
ROLINE	12.03.2996 – 10	Adapter	USB 3.2 Gen 2	C - C	M/F, 90°		–	white
VALUE	12.99.2998 – 10	Adapter	USB 3.2 Gen 1	A - C	M/F		–	black
ROLINE	12.03.2997 – 10	Adapter	USB 3.2 Gen 1	A - C	F/M		–	black
VALUE	12.99.3190 – 10	Adapter	USB 2.0	C - Micro B	M/F	OTG	–	black
VALUE	11.99.9030 – 25	Cableadapter	USB 3.2 Gen 1	C - A	M/F	OTG	0.15 m	black
ROLINE	11.02.9030 – 10	Cable	USB 3.2 Gen 1	C - A	M/F	OTG	0.15 m	black
ROLINE	11.02.9031 – 10	Cableadapter	USB	C - A	M/F	OTG	0.15 m	black
ROLINE	11.02.9015 – 10	Cable	USB 3.2 Gen 2	C - C	M/F		0.15 m	black
ROLINE	11.02.9005 – 20	Cable	USB 3.2 Gen 1	C - Micro B	M/M		0.5 m	black
ROLINE	11.02.9006 – 10	Cable	USB 3.2 Gen 1	C - Micro B	M/M		1 m	black
VALUE	12.99.2995 – 25	Adapter	USB 2.0	A - C	M/F		–	black

ROLINE RS232 Cables

- Cable with two 25-pole D-Sub connectors
- Connects a switchbox with a computer or two serial interfaces
- 25 lines connected 1:1
- Screen line connected to the cable foil screen and both connectors
- Connector casing moulded with special plastic for best strain relief
- Very good screening prevents data loss and electromagnetic interference
- Hand locking screws
- Bronze contacts with gold coating

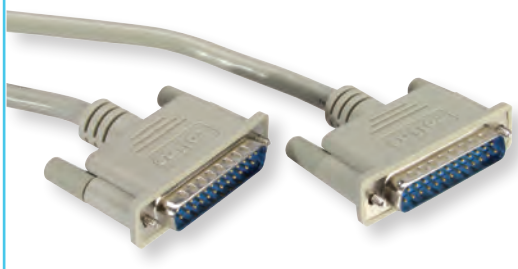

roline Designed for Professionals

	Order-No.	P.U.
ROLINE RS232 Cable, M - M, 1.8 m	11.01.3518	50
ROLINE RS232 Cable, M - M, 3 m	11.01.3530	50
ROLINE RS232 Cable, M - M, 4.5 m	11.01.3545	25
ROLINE RS232 Cable, M - M, 6 m	11.01.3560	25
ROLINE RS232 Cable, M - M, 9 m	11.01.3590	25
ROLINE RS232 Cable, M - F, 1.8 m	11.01.3618	25
ROLINE RS232 Cable, M - F, 3 m	11.01.3630	50
ROLINE RS232 Cable, M - F, 4.5 m	11.01.3645	25
ROLINE RS232 Cable, M - F, 6 m	11.01.3660	25
ROLINE RS232 Cable, M - F, 9 m	11.01.3690	20
ROLINE RS232 Cable, F - F, 1.8 m	11.01.3718	50
ROLINE RS232 Cable, F - F, 3 m	11.01.3730	50

ROLINE Parallel Printer Cables

- For printers with Centronics connection
- Cable with 25-pole D-Sub plug and 36-pole Centronics plug
- 25 lines
- Screen line connected with the foil screen and both plugs
- Connector casing moulded with special plastic, for optimal strain reduction, cable break not possible
- Very good screening prevents data loss and electromagnetic interference
- Thumbscrews
- Bronze contacts with gold coating



roline Designed for Professionals

Connection list for parallel printer cable
25-pole connector: 1-14|15|16|17|18|19|20|21|22|23|24|25
36-pole connector: 1-14|32|31|36|33|19|21|23|25|27|29|30

	Order-No.	P.U.
ROLINE Parallel Printer Cable, DB25 M - C36 M, grey, 1.8 m	11.01.1018	50
ROLINE Parallel Printer Cable, DB25 M - C36 M, grey, 3 m	11.01.1030	50
ROLINE Parallel Printer Cable, DB25 M - C36 M, grey, 4.5 m	11.01.1045	25
ROLINE Parallel Printer Cable, DB25 M - C36 M, grey, 6 m	11.01.1060	25
ROLINE Parallel Printer Cable, DB25 M - C36 M, grey, 9 m	11.01.1090	20

ROLINE Serial Link Cables

- Connects two PCs via the serial interface, whereby the cable acts as a null modem
- Two 9-pole D-Sub sockets
- Connector casing moulded with special plastic, so optimal strain reduction, cable break not possible
- Very good screening prevents data loss and electromagnetic interference

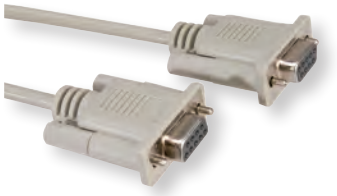

roline Designed for Professionals

9- pole F: 1|7|2|3| 4 |6/8|5|9
9- pole F: 7|1|3|2|6/8| 4 |5|9

	Order-No.	P.U.
ROLINE Serial Link Cable, DB9 F/F, 1.8 m	11.01.9018	50
ROLINE Serial Link Cable, DB9 F/F, 3 m	11.01.9030	50

VALUE RS232 Cables

- Cable with two 9-pole D-Sub connectors, assembled
- Connects e.g. the serial IBM AT interface with a switchbox
- All lines connected 1:1
- Screen line connected with the foil screen and both connectors

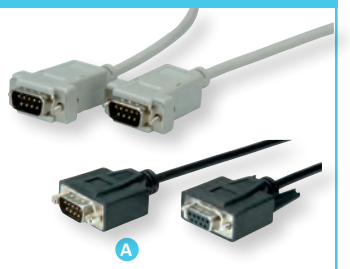

Value

		Order-No.	P.U.
VALUE RS232 Cable, DB9 M - M, 1.8 m		11.99.6018	50
VALUE RS232 Cable, DB9 M - F, 1.8 m		11.99.6218	50
VALUE RS232 Cable, DB9 M - F, 3 m		11.99.6233	50
VALUE RS232 Cable, DB9 M - F, 1 m Screw/Nuts	A	11.99.6210	50

ROLINE RS232 Cables

- Cable with two 9-pole D-Sub connectors
- Connects e.g. the serial IBM AT interface with a switchbox
- All lines connected 1:1
- Screen line connected with the foil screen and both connectors



roline Designed for Professionals

	Order-No.	P.U.
ROLINE RS232 Cable, DB9 M - M, 1.8 m	11.01.6018	50
ROLINE RS232 Cable, DB9 M - F, 1.8 m	11.01.6218	50
ROLINE RS232 Cable, DB9 M - F, 3 m	11.01.6230	50
ROLINE RS232 Cable, DB9 M - F, 6 m	11.01.6260	25
ROLINE RS232 Cable, DB9 M - F, 10 m	11.01.6290	25
ROLINE RS232 Cable, DB9 F - F, 1.8 m	11.01.5918	50

ROLINE Modem Cables

- Cable with a 9-pole D-Sub socket and a 25-pole D-Sub plug
- Connects PC and modem
- Connector casing moulded with special plastic, thus optimal strain reduction, no cable breaks
- Very good screening prevents data loss and electromagnetic interference
- Hand locking screws
- Bronze contacts with gold coating



roline Designed for Professionals

DB9 F 1|2|3| 4 |5|6|7|8|9
DB25 M 8|3|2|20|7|6|4|5|22

	Order-No.	P.U.
ROLINE Modem Cable, DB9 F - DB25 M, 1.8 m	11.01.4518	50
ROLINE Modem Cable, DB9 F - DB25 M, 3 m	11.01.4530	50
ROLINE Modem Cable, DB9 F - DB25 M, 6 m	11.01.4560	20

ROLINE Serial Printer Cables

- Cable with a 9-pole D-Sub socket and a 25-pole D-Sub plug
- Connects PC and modem
- Connector casing moulded with special plastic, thus optimal strain reduction, no cable breaks
- Very good screening prevents data loss and electromagnetic interference
- Hand locking screws
- Bronze contacts with gold coating



roline Designed for Professionals

DB9 F: 1|2|3| 4 |5|6|7|8|9
DB25 M: 8|3|2|20|7|6|4|5|22

	Order-No.	P.U.
ROLINE Serial Printer Cable, DB9 F - DB25 M, 1.8 m	11.01.4618	50
ROLINE Serial Printer Cable, DB9 F - DB25 M, 3 m	11.01.4630	50

ROLINE PS/2 Cables

- Extends the keyboard or mouse cable of a PC, e.g. for location of the computer under a table or for connection to a switchbox
- Cable with 6-pole Mini DIN plug and socket, 1:1

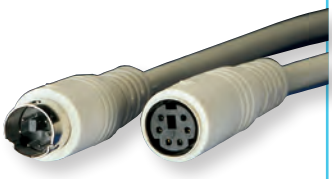

roline® Designed for Professionals

	Order-No.	P.U.
ROLINE PS/2 Cable, M - F, 1.8 m	11.01.5618	50
ROLINE PS/2 Cable, M - F, 3 m	11.01.5630	50
ROLINE PS/2 Cable, M - F, 6 m	11.01.5660	25
ROLINE PS/2 Cable, M - F, 10 m	11.01.5690	25
ROLINE PS/2 Cable, M - M, 1.8 m	11.01.5818	50
ROLINE PS/2 Cable, M - M, 3 m	11.01.5830	50
ROLINE PS/2 Cable, M - M, 6 m	11.01.5860	25

ROLINE VGA Cables, HD15

- Cable for connection of a monitor to a graphics card or to a switch
- 14 lines and additionally a screen line which is connected to the foil screen of the cable and to both connectors
- Moulded connector casings
- Hand-locking screws



roline® Designed for Professionals

	Order-No.	P.U.
ROLINE VGA Cable, HD15, F/M, 1.8 m	11.01.6518	50
ROLINE VGA Cable, HD15, F/M, 3 m	11.01.6530	50
ROLINE VGA Cable, HD15, F/M, 6 m	11.01.6560	25
ROLINE VGA Cable, HD15, F/M, 10 m	11.01.6590	25
ROLINE VGA Cable, HD15, M/M, 1.8 m	11.01.6618	50
ROLINE VGA Cable, HD15, M/M, 3 m	11.01.6630	50

VALUE SVGA Cables, HD15

- Quality cable for connection of a monitor to a graphics card or VGA splitter or amplifier
- Suitable for covering long distances (depending on graphics card and resolution) with high resolution
- Double-shielded cable (braided and foil shield) consisting of: 3 coax lines for the RGB signals and 7 AWG28 wires
- Thumbscrews

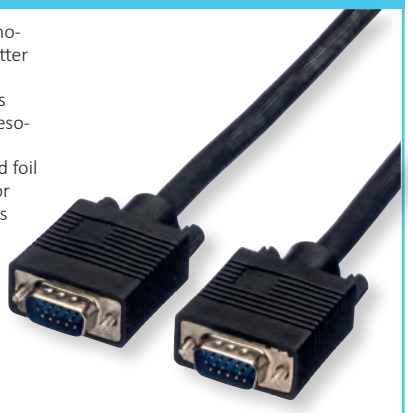

Value®

	Order-No.	P.U.
VALUE SVGA Cable, HD15, M/M, 2 m	11.99.5252	20
VALUE SVGA Cable, HD15, M/M, 3 m	11.99.5253	20
VALUE SVGA Cable, HD15, M/M, 6 m	11.99.5256	10
VALUE SVGA Cable, HD15, M/M, 10 m	11.99.5257	5
VALUE SVGA Cable, HD15, M/M, 15 m	11.99.5258	2
VALUE SVGA Cable, HD15, M/M, 20 m	11.99.5259	2

ROLINE HQ VGA Cables, HD15

- High quality cable for connection of a monitor to a graphics card or VGA splitter or amplifier
- Suitable for covering long distances (depending on graphics card and resolution) with high resolution; with amplifier up to 100 m
- Double-shielded cable (braided and foil shield)
- **3 coax lines for the RGB signals and 7 AWG28 wires (13 wires connected)**
- **Pin 9 (missing) and Pin 15 (not connected)**
- Thumbscrews



roline® Designed for Professionals

	Order-No.	P.U.
ROLINE HQ VGA Cable, HD15, M/M, 2 m	11.04.5202	20
ROLINE HQ VGA Cable, HD15, M/M, 3 m	11.04.5203	20
ROLINE HQ VGA Cable, HD15, M/M, 6 m	11.04.5206	10
ROLINE HQ VGA Cable HD15, M/M, 10 m	11.04.5210	5
ROLINE HQ VGA Cable HD15, M/M, 15 m	11.04.5215	2
ROLINE HQ VGA Cable, HD15, M/M, 20 m	11.04.5220	2
ROLINE HQ VGA Cable, HD15, M/M, 30 m	11.04.5230	2
ROLINE HQ VGA Cable, HD15, M/F, 2 m	11.04.5302	20
ROLINE HQ VGA Cable, HD15, M/F, 3 m	11.04.5303	20
ROLINE HQ VGA Cable, HD15, M/F, 6 m	11.04.5306	10
ROLINE HQ VGA Cable, HD15, M/F, 10 m	11.04.5310	5
ROLINE HQ VGA Cable, HD15, M/F, 20 m	11.04.5320	2
ROLINE HQ VGA Cable, HD15, M/F, 30 m	11.04.5330	2

ROLINE HQ VGA Cables + Ferrite, HD15

- High quality cable for connection of a monitor to a graphics card or VGA splitter or amplifier
- As monitor connection cable with two additional ferrite cores
- **3 coax lines for the RGB signals and 7 AWG28 wires (13 wires connected)**
- **Pin 9 (missing) and Pin 15 (not connected)**
- Connector casings moulded
- Double screened cable (braided and foil shield)
- Hand locking screws



roline® Designed for Professionals

	Order-No.	P.U.
ROLINE HQ VGA Cable + Ferrite, HD15, M/M, 2 m	11.04.5252	20
ROLINE HQ VGA Cable + Ferrite, HD15, M/M, 3 m	11.04.5253	20
ROLINE HQ VGA Cable + Ferrite, HD15, M/M, 6 m	11.04.5256	10
ROLINE HQ VGA Cable + Ferrite, HD15, M/M, 10 m	11.04.5260	5
ROLINE HQ VGA Cable + Ferrite, HD15, M/M, 15 m	11.04.5265	2
ROLINE HQ VGA Cable + Ferrite, HD15, M/M, 20 m	11.04.5270	2
ROLINE HQ VGA Cable + Ferrite, HD15, M/M, 30 m	11.04.5280	2
ROLINE HQ VGA Cable + Ferrite, HD15, M/F, 2 m	11.04.5352	20
ROLINE HQ VGA Cable + Ferrite, HD15, M/F, 3 m	11.04.5353	20
ROLINE HQ VGA Cable + Ferrite, HD15, M/F, 6 m	11.04.5356	10
ROLINE HQ VGA Cable + Ferrite, HD15, M/F, 10 m	11.04.5360	5
ROLINE HQ VGA Cable + Ferrite, HD15, M/F, 20 m	11.04.5370	2
ROLINE HQ VGA Cable + Ferrite, HD15, M/F, 30 m	11.04.5380	2

ROLINE HQ VGA Cables + Ferrite + DDC, HD15

- High quality cable for connection of a monitor to a graphics card or VGA splitter or amplifier
- Additionally with two ferrite cores and DDC functionality
- **3 coax lines for the RGB signals and 9 AWG28 wires (all pins connected, incl. pin 9 and pin 15)**
- Double screened cable (braided and foil shielding)
- Thumbscrews



roline® Designed for Professionals

	Order-No.	P.U.
ROLINE HQ VGA Cable + Ferrite + DDC, HD15, M/M, 2 m	11.04.5652	20
ROLINE HQ VGA Cable + Ferrite + DDC, HD15, M/M, 3 m	11.04.5653	20
ROLINE HQ VGA Cable + Ferrite + DDC, HD15, M/M, 6 m	11.04.5656	10
ROLINE HQ VGA Cable + Ferrite + DDC, HD15, M/M, 10 m	11.04.5660	5
ROLINE HQ VGA Cable + Ferrite + DDC, HD15, M/M, 15 m	11.04.5665	2
ROLINE HQ VGA Cable + Ferrite + DDC, HD15, M/M, 20 m	11.04.5670	2
ROLINE HQ VGA Cable + Ferrite + DDC, HD15, M/F, 2 m	11.04.5651	20
ROLINE HQ VGA Cable + Ferrite + DDC, HD15, M/F, 3 m	11.04.5654	20
ROLINE HQ VGA Cable + Ferrite + DDC, HD15, M/F, 6 m	11.04.5655	10
ROLINE HQ VGA Cable + Ferrite + DDC, HD15, M/F, 10 m	11.04.5659	5

ROLINE Combi Cables, VGA + Audio

- To connect in an easy way PC or Switch with your PC
- The separate cable VGA and 3.5 mm Audio are now combined in only one cable
- On both side are HD15 M and 3.5 mm M connectors
- Colour: dark grey



roline® Designed for Professionals

	Order-No. – P.U.
ROLINE Combi Cable, VGA + Audio, M-M, 3.0 m	11.04.5153 – 20
ROLINE Combi Cable, VGA + Audio, M-M, 6.0 m	11.04.5156 – 10
ROLINE Combi Cable, VGA + Audio, M-M, 10.0 m	11.04.5160 – 5
ROLINE Combi Cable, VGA + Audio, M-M, 15.0 m	11.04.5162 – 3
ROLINE Combi Cable, VGA + Audio, M-M, 20.0 m	11.04.5164 – 2

VALUE DVI Cables, DVI (18+5) - HD15

- Used for the connection of a TFT monitor with an analogue DVI connector to a standard VGA graphic card
- Cable with one DVI male connector and one HD15 male connector



Value®

	Order-No. – P.U.
VALUE DVI Cable, DVI (18+5) - HD15, M/M, 2.0 m	11.99.5420 – 25
VALUE DVI Cable, DVI (18+5) - HD15, M/M, 3.0 m	11.99.5430 – 20
VALUE DVI Cable, DVI (18+5) - HD15, M/M, 5.0 m	11.99.5449 – 10

ROLINE DVI Cables, DVI (12+5) - HD15

VGA / DVI connection cable to use a VGA monitor with a DVI-I output on the graphics card. The cable is connected between the VGA graphics card and the digital monitor or between the VGA graphics card and the DVI-I interface of the monitor.

- Used for the connection of a monitor with a DVI connector to a standard VGA graphics card
- Cable with one DVI Male connector and one HD15 Male connector



roline® Designed for Professionals

	Order-No. – P.U.
ROLINE DVI Cable, DVI (12+5) - HD15, M/M, 2.0 m	11.04.5420 – 25
ROLINE DVI Cable, DVI (12+5) - HD15, M/M, 3.0 m	11.04.5430 – 20
ROLINE DVI Cable, DVI (12+5) - HD15, M/M, 5.0 m	11.04.5450 – 10

VALUE DVI Cables, DVI (24+1), Dual Link

- DVI is the standard for the digital transmission between graphic card and digital monitor (e.g. TFT)
- Advantage: No quality loss during digital/analog conversion
- Colour: black



Value®

	Order-No. – P.U.
VALUE Monitor DVI Cable, DVI (24+1), Dual Link, M/M, 1.0 m	11.99.5521 – 40
VALUE Monitor DVI Cable, DVI (24+1), Dual Link, M/M, 2.0 m	11.99.5525 – 25
VALUE Monitor DVI Cable, DVI (24+1), Dual Link, M/M, 3.0 m	11.99.5535 – 20
VALUE Monitor DVI Cable, DVI (24+1), Dual Link, M/M, 5.0 m	11.99.5555 – 10
VALUE Monitor DVI Cable, DVI (24+1), Dual Link, M/M, 7.5 m	11.99.5556 – 10
VALUE Monitor DVI Cable, DVI (24+1), Dual Link, M/M, 10.0 m	11.99.5595 – 10
VALUE Monitor DVI Cable, DVI (24+1), Dual Link, M/F, 1.0 m	11.99.5562 – 10
VALUE Monitor DVI Cable, DVI (24+1), Dual Link, M/F, 2.0 m	11.99.5563 – 10
VALUE Monitor DVI Cable, DVI (24+1), Dual Link, M/F, 3.0 m	11.99.5564 – 10
VALUE Monitor DVI Cable, DVI (24+1), Dual Link, M/F, 5.0 m	11.99.5565 – 5

ROLINE DVI Cables, DVI (24+1), Dual Link

DVI is a video interface standard designed to provide very high visual quality on digital display devices such as flat panel LCD computer displays and digital projectors. It was developed to replace the VGA connector standard. It is designed for carrying uncompressed digital video data to a display.

- Advantage: No quality loss during digital/analog conversion
- Colour: Black

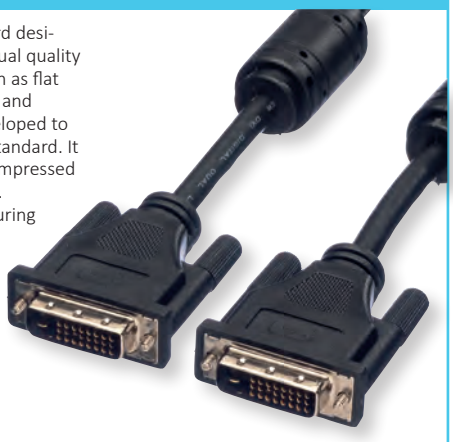

roline® Designed for Professionals

	Order-No. – P.U.
ROLINE Monitor Cable, DVI (24+1), Dual Link, M/M, 1.0 m	11.04.5521 – 25
ROLINE Monitor Cable, DVI (24+1), Dual Link, M/M, 2.0 m	11.04.5525 – 25
ROLINE Monitor Cable, DVI (24+1), Dual Link, M/M, 3.0 m	11.04.5535 – 20
ROLINE Monitor Cable, DVI (24+1), Dual Link, M/M, 5.0 m	11.04.5555 – 10
ROLINE Monitor Cable, DVI (24+1), Dual Link, M/M, 7.5 m	11.04.5556 – 10
ROLINE Monitor Cable, DVI (24+1), Dual Link, M/M, 10.0 m	11.04.5595 – 10
ROLINE Monitor Cable, DVI (24+1), Dual Link, M/M, 15.0 m	11.04.5598 – 4
ROLINE Monitor Cable, DVI (24+1), Dual Link, M/M, 20.0 m	11.04.5599 – 3

VALUE DVI Cables, DVI (18+1) - HDMI

2K 1080p FULL HD

VALUE HDMI to DVI cable for connecting an ultrabook, notebook/laptop or PC to a monitor, TV or projector - for screen transmissions in excellent quality with a resolution of up to 1920x1080 @60Hz!

- The connector requires less space and is therefore more suitable for portable display devices (ultrabooks, notebooks/laptops) or for 2 connectors on a graphics card (on a slot plate).
- High-quality, double-shielded cable (foil+braid) with gold-plated contacts for optimum transmission of image signals
- Connectors: DVI-D (18+1) to HDMI



	Order-No. – P.U.
VALUE DVI Cable, DVI (18+1) - HDMI, M/M, black, 1 m	11.99.5519 – 20
VALUE DVI Cable, DVI (18+1) - HDMI, M/M, black, 1.5 m	11.99.5516 – 20
VALUE DVI Cable, DVI (18+1) - HDMI, M/M, black, 2 m	11.99.5522 – 20
VALUE DVI Cable, DVI (18+1) - HDMI, M/M, black, 3 m	11.99.5532 – 20
VALUE DVI Cable, DVI (18+1) - HDMI, M/M, black, 5 m	11.99.5552 – 10
VALUE DVI Cable, DVI (18+1) - HDMI, M/M, black, 10 m	11.99.5553 – 5

ROLINE DVI Cables, DVI (18+1) - HDMI

2K 1080p FULL HD

ROLINE HDMI to DVI cable for connecting an ultrabook, notebook/laptop or PC to a monitor, TV or projector - for screen transmissions in excellent quality with a resolution of up to 1920x1080 @60Hz!

- The connector requires less space and is therefore more suitable for portable display devices (ultrabooks, notebooks/laptops) or for 2 connectors on a graphics card (on a slot plate).
- High-quality, double-shielded cable (foil+braid) with gold-plated contacts for optimum transmission of image signals
- Connectors: DVI-D (18+1) to HDMI



roline® Designed for Professionals

	Order-No. – P.U.
ROLINE DVI Cable, DVI (18+1) - HDMI, M/M, black, 1 m	11.04.5519 – 20
ROLINE DVI Cable, DVI (18+1) - HDMI, M/M, black, 1.5 m	11.04.5516 – 20
ROLINE DVI Cable, DVI (18+1) - HDMI, M/M, black, 2 m	11.04.5522 – 20
ROLINE DVI Cable, DVI (18+1) - HDMI, M/M, black, 3 m	11.04.5532 – 20
ROLINE DVI Cable, DVI (18+1) - HDMI, M/M, black, 5 m	11.04.5552 – 10
ROLINE DVI Cable, DVI (18+1) - HDMI, M/M, black, 10 m	11.04.5553 – 5

ROLINE Monitor Cables, DVI (24+1) - HDMI, Dual Link

4K 2160p UHD–1

ROLINE HDMI to DVI cable for connecting an ultrabook, notebook/laptop or PC to a monitor, TV or projector - for screen transmissions in excellent quality with a resolution of up to 3840x2160 @30Hz!

- The rugged nylon braid protects the cable effectively and makes it look stunning.
- High-quality, double-shielded cable (foil+braid) with gold-plated contacts for optimum transmission of image signals
- Connectors: DVI-D (24+1) to HDMI



roline® Designed for Professionals

	Order-No. – P.U.
ROLINE Monitor Cable, DVI (24+1) - HDMI, Dual Link, M/M, black /silver, 1 m	11.04.5870 – 10
ROLINE Monitor Cable, DVI (24+1) - HDMI, Dual Link, M/M, black /silver, 1.5 m	11.04.5876 – 10
ROLINE Monitor Cable, DVI (24+1) - HDMI, Dual Link, M/M, black /silver, 2 m	11.04.5871 – 10
ROLINE Monitor Cable, DVI (24+1) - HDMI, Dual Link, M/M, black /silver, 3 m	11.04.5872 – 10
ROLINE Monitor Cable, DVI (24+1) - HDMI, Dual Link, M/M, black /silver, 5 m	11.04.5873 – 10
ROLINE Monitor Cable, DVI (24+1) - HDMI, Dual Link, M/M, black /silver, 7.5 m	11.04.5874 – 5
ROLINE Monitor Cable, DVI (24+1) - HDMI, Dual Link, M/M, black /silver, 10 m	11.04.5875 – 5

VALUE HDMI High Speed Cables

2K 1080p FULL HD 3D capable

- HDMI supports standard, enhanced, or high-definition video, plus multi-channel digital audio on a single cable. It transmits all ATSC HDTV standards and supports 8-channel digital audio, with bandwidth to spare to accommodate future enhancements and requirements.
- Maximum resolution: 1920x1080 @60Hz
- HDMI High Speed increases single-link bandwidth to 340 MHz (10.2 Gbit/s)



	Order-No. – P.U.
VALUE HDMI High Speed Cable, M/M, black, 1 m	11.99.5526 – 20
VALUE HDMI High Speed Cable, M/M, black, 2 m	11.99.5527 – 20
VALUE HDMI High Speed Cable, M/M, black, 3 m	11.99.5537 – 20
VALUE HDMI High Speed Cable, M/M, black, 5 m	11.99.5557 – 10
VALUE HDMI High Speed Cable, M/M, black, 10 m	11.99.5558 – 10
VALUE HDMI High Speed Cable, M/M, black, 15 m	11.99.5534 – 5
VALUE HDMI High Speed Cable, M/M, black, 20 m	11.99.5536 – 5

ROLINE HDMI High Speed Cables

2K 1080p FULL HD 3D capable

HDMI (High-Definition Multimedia Interface) supports standard, enhanced, or high-definition video, plus multi-channel digital audio on a single cable.

- Maximum resolution: 1920x1080 @60Hz
- HDMI High Speed increases single-link bandwidth to 340 MHz (10.2 Gbit/s)
- HDMI High Speed supports 10-bit, 12-bit and 16-bit (RGB or YCbCr) color depths, for stunning rendering of over one billion colors in unprecedented detail
- ROLINE cable with high quality shielding
- Colour: black

roline® Designed for Professionals



	Order-No. – P.U.
ROLINE HDMI High Speed Cable, M/M, 1 m	11.04.5571 – 20
ROLINE HDMI High Speed Cable, M/M, 2 m	11.04.5572 – 20
ROLINE HDMI High Speed Cable, M/M, 3 m	11.04.5573 – 20
ROLINE HDMI High Speed Cable, M/M, 5 m	11.04.5575 – 10
ROLINE HDMI High Speed Cable, M/M, 10 m	11.04.5576 – 5
ROLINE HDMI High Speed Cable, M/M, 15 m	11.04.5577 – 5
ROLINE HDMI High Speed Cable, M/M, 20 m	11.04.5578 – 5

VALUE HDMI High Speed Cables + Ethernet

Allowing a maximum video resolution of up to 3840x2160 @30Hz! (for length up to 5m)

- HDMI Ethernet Channel- Adds high-speed networking to an HDMI link, allowing users to take full advantage of their IP-enabled devices without a separate ethernet cable
- Audio Return Channel
- 3D- Defines input/output protocols for major 3D video formats, paving the way for true 3D gaming and 3D home theater applications
- Additional Color Spaces- Adds support for additional color models used in digital photography and computer graphics
- Colour: black / white



Value®

4K 2160p 3D capable *Halogenfree Flame Retardant Low Smoke

	Order-No. – P.U.
VALUE HDMI High Speed Cable + Ethernet, M/F, 1 m	11.99.5574 – 10
VALUE HDMI High Speed Cable + Ethernet, M/F, 1.5 m	11.99.5571 – 10
VALUE HDMI High Speed Cable + Ethernet, M/F, 2 m	11.99.5575 – 10
VALUE HDMI High Speed Cable + Ethernet, M/F, 3 m	11.99.5576 – 10
VALUE HDMI High Speed Cable + Ethernet, M/F, 5 m	11.99.5577 – 5
VALUE HDMI High Speed Cable + Ethernet, M/M, black, 1 m	11.99.5541 – 10
VALUE HDMI High Speed Cable + Ethernet, M/M, black, 1.5 m	11.99.5531 – 10
VALUE HDMI High Speed Cable + Ethernet, M/M, black, 2 m	11.99.5542 – 10
VALUE HDMI High Speed Cable + Ethernet, M/M, black, 3 m	11.99.5543 – 10
VALUE HDMI High Speed Cable + Ethernet, M/M, black, 5 m	11.99.5545 – 10
VALUE HDMI High Speed Cable + Ethernet, M/M, white, 1 m	11.99.5701 – 10
VALUE HDMI High Speed Cable + Ethernet, M/M, white, 1.5 m	11.99.5704 – 10
VALUE HDMI High Speed Cable + Ethernet, M/M, white, 2 m	11.99.5702 – 10
VALUE HDMI High Speed Cable + Ethernet, M/M, white, 3 m	11.99.5703 – 10
VALUE HDMI High Speed Cable + Ethernet, M/M, white, 5 m	11.99.5705 – 10
VALUE HDMI High Speed Cable + Ethernet, **LSOH***, M/M, black, 1 m	11.99.5731 – 10
VALUE HDMI High Speed Cable + Ethernet, **LSOH***, M/M, black, 2 m	11.99.5732 – 10
VALUE HDMI High Speed Cable + Ethernet, **LSOH***, M/M, black, 3 m	11.99.5733 – 10
VALUE HDMI High Speed Cable + Ethernet, **LSOH***, M/M, black, 5 m	11.99.5735 – 10

2K 1080p FULL HD 3D capable *Halogenfree Flame Retardant Low Smoke

	Order-No. – P.U.
VALUE HDMI High Speed Cable + Ethernet, M/M, black, 7.5 m	11.99.5544 – 10
VALUE HDMI High Speed Cable + Ethernet, M/M, black, 10 m	11.99.5546 – 5
VALUE HDMI High Speed Cable + Ethernet, M/M, black, 15 m	11.99.5547 – 5
VALUE HDMI High Speed Cable + Ethernet, M/M, black, 20 m	11.99.5548 – 5
VALUE HDMI High Speed Cable + Ethernet, M/M, white, 7.5 m	11.99.5706 – 10
VALUE HDMI High Speed Cable + Ethernet, M/M, white, 10 m	11.99.5710 – 5
VALUE HDMI High Speed Cable + Ethernet, M/M, white, 15 m	11.99.5715 – 5
VALUE HDMI High Speed Cable + Ethernet, M/M, white, 20 m	11.99.5720 – 5
VALUE HDMI High Speed Cable + Ethernet, **LSOH***, M/M, black, 7.5 m	11.99.5736 – 10
VALUE HDMI High Speed Cable + Ethernet, **LSOH***, M/M, black, 10 m	11.99.5740 – 5
VALUE HDMI High Speed Cable + Ethernet, **LSOH***, M/M, black, 15 m	11.99.5745 – 5
VALUE HDMI High Speed Cable + Ethernet, **LSOH***, M/M, black, 20 m	11.99.5750 – 5

ROLINE HDMI High Speed Cables + Ethernet

ROLINE HDMI High Speed Cables with Ethernet - offering even more HDTV features, at a resolution of up to 3840x2160 @30Hz! (for length up to 5m)

- HDMI Ethernet Channel
- Audio Return Channel
- 3D- Defines input/output protocols for major 3D video formats
- Quality cable with improved shielding
- Colour: black/white
- Cable with HDMI male connector on both sides



roline®
Designed for Professionals

4K 2160p 3D capable *Halogenfree Flame Retardant Low Smoke

	Order-No. – P.U.
ROLINE HDMI High Speed Cable + Ethernet, M/M, black, 1 m	11.04.5541 – 10
ROLINE HDMI High Speed Cable + Ethernet, M/M, black, 1.5 m	11.04.5531 – 10
ROLINE HDMI High Speed Cable + Ethernet, M/M, black, 2 m	11.04.5542 – 10
ROLINE HDMI High Speed Cable + Ethernet, M/M, black, 3 m	11.04.5543 – 10
ROLINE HDMI High Speed Cable + Ethernet, M/M, black, 5 m	11.04.5545 – 10
ROLINE HDMI High Speed Cable + Ethernet, M/M, white, 1 m	11.04.5701 – 10
ROLINE HDMI High Speed Cable + Ethernet, M/M, white, 1.5 m	11.04.5704 – 10
ROLINE HDMI High Speed Cable + Ethernet, M/M, white, 2 m	11.04.5587 – 10
ROLINE HDMI High Speed Cable + Ethernet, M/M, white, 3 m	11.04.5703 – 10
ROLINE HDMI High Speed Cable + Ethernet, M/M, white, 5 m	11.04.5588 – 10
ROLINE HDMI High Speed Cable + Ethernet, **LSOH***, M/M, black, 1 m	11.04.5731 – 10
ROLINE HDMI High Speed Cable + Ethernet, **LSOH***, M/M, black, 2 m	11.04.5732 – 10
ROLINE HDMI High Speed Cable + Ethernet, **LSOH***, M/M, black, 3 m	11.04.5733 – 10
ROLINE HDMI High Speed Cable + Ethernet, **LSOH***, M/M, black, 5 m	11.04.5735 – 10

2K 1080p FULL HD 3D capable *Halogenfree Flame Retardant Low Smoke

	Order-No. – P.U.
ROLINE HDMI High Speed Cable + Ethernet, M/M, black, 7.5 m	11.04.5544 – 10
ROLINE HDMI High Speed Cable + Ethernet, M/M, black, 10 m	11.04.5547 – 5
ROLINE HDMI High Speed Cable + Ethernet, M/M, black, 15 m	11.04.5548 – 5
ROLINE HDMI High Speed Cable + Ethernet, M/M, black, 20 m	11.04.5549 – 5
ROLINE HDMI High Speed Cable + Ethernet, M/M, black, 30 m	11.04.5546 – 2
ROLINE HDMI High Speed Cable + Ethernet, M/M, white, 7.5 m	11.04.5706 – 10
ROLINE HDMI High Speed Cable + Ethernet, M/M, white, 10 m	11.04.5710 – 5
ROLINE HDMI High Speed Cable + Ethernet, M/M, white, 15 m	11.04.5715 – 5
ROLINE HDMI High Speed Cable + Ethernet, M/M, white, 20 m	11.04.5720 – 5
ROLINE HDMI High Speed Cable + Ethernet, **LSOH***, M/M, black, 7.5 m	11.04.5736 – 10
ROLINE HDMI High Speed Cable + Ethernet, **LSOH***, M/M, black, 10 m	11.04.5740 – 5
ROLINE HDMI High Speed Cable + Ethernet, **LSOH***, M/M, black, 15 m	11.04.5745 – 5
ROLINE HDMI High Speed Cable + Ethernet, **LSOH***, M/M, black, 20 m	11.04.5750 – 5

ROLINE Notebook HDMI High Speed Cables + Ethernet

4K 2160p 3D capable

High quality HDMI High Speed Cable with Ethernet - offering even more HDTV features, with a resolution of up to 3840x2160 @30Hz!

- HDMI Ethernet Channel
- Audio Return Channel
- 3D- Defines input/output protocols for major 3D video formats
- Quality cable with improved shielding
- Colour: black
- Cable with extra compact HDMI male connector on both sides, perfectly suited for mobile applications, like e.g. for Ultrabooks/Notebooks



roline Designed for Professionals

	Order-No.	P.U.
ROLINE Notebook HDMI High Speed Cable + Ethernet, M/M, black, 1 m	11.04.5591	20
ROLINE Notebook HDMI High Speed Cable + Ethernet, M/M, black, 1.5 m	11.04.5596	20
ROLINE Notebook HDMI High Speed Cable + Ethernet, M/M, black, 2 m	11.04.5592	20

2K 1080p FULL HD

ROLINE Notebook HDMI High Speed Cable + Ethernet, M/M, black, 3 m	11.04.5593	20
ROLINE Notebook HDMI High Speed Cable + Ethernet, M/M, black, 5 m	11.04.5594	10

ROLINE HDMI High Speed Cables Ethernet

4K 2160p 3D capable

ROLINE HDMI cable with double-sided HDMI connection for connecting an ultrabook, notebook/laptop or PC to a monitor, TV or projector - for screen transmissions in excellent quality with a resolution of up to 3840x2160 @30Hz!

- The rugged nylon braid protects the HDMI cable effectively and makes it look stunning.
- High-quality, double-shielded cable (foil+braid) with gold-plated contacts for optimum transmission of image signals
- Supports 3D video
- HDMI Ethernet channel
- Audio return channel for forwarding signals to the audio/video receiver.
- Black metallic connector housing



roline Designed for Professionals

	Order-No.	P.U.
ROLINE HDMI High Speed Cable + Ethernet, M/M, black /silver, 1 m	11.04.5850	10
ROLINE HDMI High Speed Cable + Ethernet, M/M, black /silver, 1.5 m	11.04.5856	10
ROLINE HDMI High Speed Cable + Ethernet, M/M, black /silver, 2 m	11.04.5851	10
ROLINE HDMI High Speed Cable + Ethernet, M/M, black /silver, 3 m	11.04.5852	10
ROLINE HDMI High Speed Cable + Ethernet, M/M, black /silver, 5 m	11.04.5853	10

2K 1080p FULL HD

ROLINE HDMI High Speed Cable + Ethernet, M/M, black /silver, 7.5 m	11.04.5854	5
ROLINE HDMI High Speed Cable + Ethernet, M/M, black /silver, 10 m	11.04.5855	5

VALUE /ROLINE HDMI High Speed Cables + Ethernet, Type C/D

2K 1080p FULL HD 3D capable

For the connection of e. g. mobile phones, smart phones, PDAs, digital cameras.

- HDMI Ethernet Channel
- Audio Return Channel
- 3D- Defines input/output protocols for major 3D video formats
- Connectors: HDMI Type A F to HDMI Type C (Mini HDMI) M or Type D (Micro HDMI) M
- Quality cable with improved shielding
- Colour: black

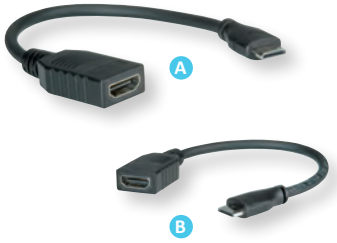

Value

		Order-No.	P.U.
VALUE HDMI High Speed Cable + Ethernet, A - C, F/M, 0.15 m	A	11.99.5586	25
VALUE HDMI High Speed Cable + Ethernet, A - D, F/M, 0.15 m	B	11.99.5584	25

		Order-No.	P.U.
ROLINE HDMI High Speed Cable + Ethernet, A - C, F/M, 0.15 m	A	11.04.5586	10
ROLINE HDMI High Speed Cable + Ethernet, A - D, F/M, 0.15 m	B	11.04.5584	10

ROLINE HDMI High Speed Cable + Ethernet, TPE

4K 2160p 3D capable

High-quality HDMI cable for resolutions up to 3840x2160 @30Hz in a very flexible TPE cable sheath.

- Supports 3D video transmission
- HDMI Ethernet Channel
- Audio return channel for signal forwarding to the audio/video receiver
- Cable with HDMI plug on both sides
- Improved cable shielding
- Elastic and very flexible thanks to TPE outer sheath- best properties for cable ducts and similar applications where not much space is available
- Material: TPE (Thermoplastic Elastomer)



roline Designed for Professionals

	Order-No.	P.U.
ROLINE HDMI High Speed Cable + Ethernet, TPE, black, 1 m	11.04.5930	10
ROLINE HDMI High Speed Cable + Ethernet, TPE, black, 1.5 m	11.04.5931	10
ROLINE HDMI High Speed Cable + Ethernet, TPE, black, 2 m	11.04.5932	10
ROLINE HDMI High Speed Cable + Ethernet, TPE, black, 3 m	11.04.5933	10
ROLINE HDMI High Speed Cable + Ethernet, TPE, black, 5 m	11.04.5934	10
ROLINE HDMI High Speed Cable + Ethernet, TPE, black, 7.5 m	11.04.5935	10
ROLINE HDMI High Speed Cable + Ethernet, TPE, black, 10 m	11.04.5936	5

VALUE HDMI High Speed Cables + Ethernet, Type C/D

2K 1080p FULL HD 3D capable

For the connection of e. g. mobile phones, smart phones, PDAs, digital cameras.

- Video resolution: 1920 x 1080 Pixel
- Connectors:
  HDMI Type A M to HDMI Type C (Mini HDMI) M
  HDMI Type A M to HDMI Type D (Micro HDMI) M
- Quality cable with gold plated contacts for enhanced durability



Value

	Order-No.	P.U.
VALUE HDMI High Speed Cable + Ethernet, A - C, M/M, 0.8 m	11.99.5578	10
VALUE HDMI High Speed Cable + Ethernet, A - C, M/M, 2 m	11.99.5580	10
VALUE HDMI High Speed Cable + Ethernet, A - D, M/M, 2 m	11.99.5581	10

ROLINE HDMI High Speed Cables + Ethernet, Type C/D

2K 1080p FULL HD 3D capable

For the connection of e. g. mobile phones, smart phones, PDAs, digital cameras.

- Video resolution: 1920 x 1080 Pixel
- Connectors:
  HDMI Type A M to HDMI Type C (Mini HDMI) M
  HDMI Type A M to HDMI Type D (Micro HDMI) M
- Quality cable with improved shielding

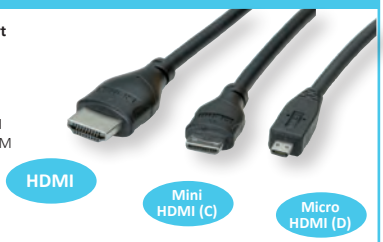

roline Designed for Professionals

	Order-No.	P.U.
ROLINE HDMI High Speed Cable + Ethernet, A - C, M/M, 0.8 m	11.04.5568	10
ROLINE HDMI High Speed Cable + Ethernet, A - C, M/M, 2 m	11.04.5580	10
ROLINE HDMI High Speed Cable + Ethernet, A - D, M/M, 2 m	11.04.5581	10

VALUE HDMI Ultra HD Cables + Ethernet

4K | 2160p UHD–1 | 3D capable

High-quality HDMI connection cable with HDMI connectors for optimal transmission of digital HDTV signals at data rates up to 18 Gbit/s (600MHz). For the transmission of films in digital cinema-quality, with a resolution of up to 3840x2160 @60Hz!

- HDMI Ethernet Channel- Adds high-speed networking to an HDMI link, allowing users to take full advantage of their IP-enabled devices without a separate ethernet cable
- Audio Return Channel- Allows an HDMI-connected TV with a built-in tuner to send audio data „upstream“ to a surround audio system, eliminating the need for a separate audio cable
- 3D- Defines input/output protocols for major 3D video formats
- High quality cable with a gold plated metal connector housing and shell for better shielding
- Gold plated contacts for higher durability



Value®

	Order-No.	P.U.
VALUE HDMI Ultra HD Cable + Ethernet, M/M, black, 1 m	11.99.5680	10
VALUE HDMI Ultra HD Cable + Ethernet, M/M, black, 1.5 m	11.99.5688	10
VALUE HDMI Ultra HD Cable + Ethernet, M/M, black, 2 m	11.99.5681	10
VALUE HDMI Ultra HD Cable + Ethernet, M/M, black, 3 m	11.99.5682	10
VALUE HDMI Ultra HD Cable + Ethernet, M/M, black, 5 m	11.99.5683	10

ROLINE HDMI Ultra HD Cables + Ethernet

4K | 2160p UHD–1 | 3D capable

High-quality HDMI connection cable with HDMI connectors for optimal transmission of digital HDTV signals at data rates up to 18 Gbit/s (600MHz). For the transmission of films in digital cinema-quality, with a resolution of up to 3840x2160 @60Hz!

- HDMI Ethernet Channel- Adds high-speed networking to an HDMI link, allowing users to take full advantage of their IP-enabled devices without a separate ethernet cable
- Audio Return Channel- Allows an HDMI-connected TV with a built-in tuner to send audio data „upstream“ to a surround audio system, eliminating the need for a separate audio cable
- 3D- Defines input/output protocols for major 3D video formats
- High quality cable with golden metal connector housing and shell for better shielding
- Gold plated contacts for higher durability



roline®
Designed for Professionals

	Order-No.	P.U.
ROLINE HDMI Ultra HD Cable + Ethernet, M/M, black, 1 m	11.04.5680	10
ROLINE HDMI Ultra HD Cable + Ethernet, M/M, black, 1.5 m	11.04.5688	10
ROLINE HDMI Ultra HD Cable + Ethernet, M/M, black, 2 m	11.04.5681	10
ROLINE HDMI Ultra HD Cable + Ethernet, M/M, black, 3 m	11.04.5682	10
ROLINE HDMI Ultra HD Cable + Ethernet, M/M, black, 5 m	11.04.5683	10
ROLINE HDMI Ultra HD Cable + Ethernet, M/M, black, 7.5 m	11.04.5684	10
Max. Resolution: 3840 x 2160@30Hz (4K | 2160p | 3D capable)		
ROLINE HDMI Ultra HD Cable + Ethernet, M/M, black, 10 m	11.04.5685	10
ROLINE HDMI Ultra HD Cable + Ethernet, M/M, black, 15 m	11.04.5686	10
ROLINE HDMI Ultra HD Cable + Ethernet, M/M, black, 20 m	11.04.5687	10

ROLINE HDMI Ultra HD Cable + Ethernet, Active

4K | 2160p UHD–1 | 3D capable

High-quality HDMI connection cable with HDMI connectors for optimal transmission of digital HDTV signals at data rates up to 18 Gbit/s (600MHz). For the transmission of films in digital cinema-quality, with a resolution of up to 3840x2160 @60Hz!

- HDMI Ethernet Channel- Adds high-speed networking to an HDMI link, allowing users to take full advantage of their IP-enabled devices without a separate ethernet cable
- Audio Return Channel- Allows an HDMI-connected TV with a built-in tuner to send audio data „upstream“ to a surround audio system, eliminating the need for a separate audio cable
- 3D- Defines input/output protocols for major 3D video formats
- Cable with HDMI male connector on both sides
- High quality cable with golden plated shell
- Gold plated contacts for higher durability

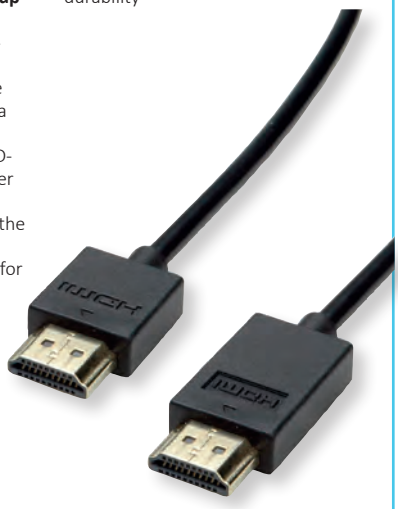

roline®
Designed for Professionals

	Order-No.	P.U.
ROLINE HDMI Ultra HD Cable + Ethernet, active, M/M, black, 1 m	11.04.5910	20
ROLINE HDMI Ultra HD Cable + Ethernet, active, M/M, black, 1.5 m	11.04.5911	20
ROLINE HDMI Ultra HD Cable + Ethernet, active, M/M, black, 2 m	11.04.5912	15
ROLINE HDMI Ultra HD Cable + Ethernet, active, M/M, black, 3 m	11.04.5913	15
ROLINE HDMI Ultra HD Cable + Ethernet, active, M/M, black, 5 m	11.04.5915	10

ROLINE PREMIUM HDMI Ultra HD Cables + Ethernet

4K | 2160p UHD–1 | 3D capable

- HDMI Ethernet Channel- Adds high-speed networking to an HDMI link, allowing users to take full advantage of their IP-enabled devices without a separate ethernet cable
- Audio Return Channel- Allows an HDMI-connected TV with a built-in tuner to send audio data „upstream“ to a surround audio system, eliminating the need for a separate audio cable
- 3D- Defines input/output protocols for major 3D video formats
- 4k support- Enables video resolutions up to 3840 x 2160 @60Hz far beyond 1080p, supporting next-generation displays
- Cable with HDMI male connector on both sides
- High quality cable with golden metal connector housing and shell for better shielding
- Gold plated contacts for higher durability



roline®
Designed for Professionals

HDMI PREMIUM Certified Cable

	Order-No.	P.U.
ROLINE PREMIUM HDMI Ultra HD Cable + Ethernet, M/M, 1 m	11.04.5801	10
ROLINE PREMIUM HDMI Ultra HD Cable + Ethernet, M/M, 2 m	11.04.5802	10
ROLINE PREMIUM HDMI Ultra HD Cable + Ethernet, M/M, 3 m	11.04.5803	10
ROLINE PREMIUM HDMI Ultra HD Cable + Ethernet, M/M, 4.5 m	11.04.5804	10
ROLINE PREMIUM HDMI Ultra HD Cable + Ethernet, M/M, 7.5 m	11.04.5805	5
ROLINE PREMIUM HDMI Ultra HD Cable + Ethernet, M/M, 9 m	11.04.5806	5

VALUE HDMI Ultra HD Cable + Ethernet, M/M, Resistant Plug

4K | 2160p UHD–1 | 3D capable

HDMI UHD cable for optimal transmission of films, with a resolution of up to 3840x2160 @60Hz! The metal connector housing comes with mechanical resistance to increase the cables tensile strength!

- HDMI Ethernet Channel- Adds high-speed networking to an HDMI link, allowing users to take full advantage of their IP-enabled devices without a separate ethernet cable
- Audio Return Channel- Allows an HDMI-connected TV with a built-in tuner to send audio data „upstream“ to a surround audio system, eliminating the need for a separate audio cable
- 3D- Defines input/output protocols for major 3D video formats
- Cable with HDMI male connector on both sides
- High quality cable with a gold plated metal connector housing and shell for better shielding
- Gold plated contacts for higher durability



	Order-No.	P.U.
VALUE HDMI Ultra HD Cable + Ethernet, M/M, Resistant Plug, black, 1 m	11.99.5690	30
VALUE HDMI Ultra HD Cable + Ethernet, M/M, Resistant Plug, black, 1.5 m	11.99.5691	30
VALUE HDMI Ultra HD Cable + Ethernet, M/M, Resistant Plug, black, 2 m	11.99.5692	30
VALUE HDMI Ultra HD Cable + Ethernet, M/M, Resistant Plug, black, 3 m	11.99.5693	20
VALUE HDMI Ultra HD Cable + Ethernet, M/M, Resistant Plug, black, 5 m	11.99.5694	20
VALUE HDMI Ultra HD Cable + Ethernet, M/M, Resistant Plug, black, 7.5 m	11.99.5695	10
VALUE HDMI Ultra HD Cable + Ethernet, M/M, Resistant Plug, black, 10 m	11.99.5696	10

VALUE HDMI 8K (7680 x 4320) Ultra HD Cables + Ethernet

8K | 4320p UHD-2 | 3D capable

High quality HDMI cable with HDMI connectors for optimal transmission of digital UHD signals at very high data rates. For transfer of films in digital cinema quality with up to 8K at 60Hz.

- HDMI Ethernet Channel- Adds high-speed networking to an HDMI link, allowing users to take full advantage of their IP-enabled devices without a separate ethernet cable
- Audio Return Channel- Allows a HDMI-connected TV with a built-in tuner to send audio data „upstream“ to a surround audio system, eliminating the need for a separate audio cable
- 3D- Defines input/output protocols for major 3D video formats
- 8k support- Enables video resolutions up to 4320p @60Hz far beyond 1080p, supporting next-generation displays
- Cable with HDMI male connector on both sides
- High quality cable with golden metal connector housing and shell for better shielding
- Gold plated contacts for higher durability

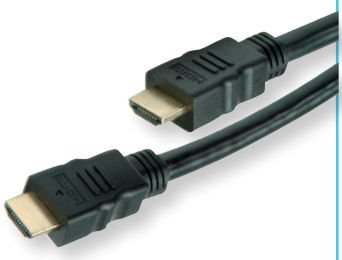

	Order-No.	P.U.
VALUE HDMI 8K (7680 x 4320) Ultra HD Cable + Ethernet, M/M, black, 1 m	11.99.5901	10
VALUE HDMI 8K (7680 x 4320) Ultra HD Cable + Ethernet, M/M, black, 2 m	11.99.5902	10
VALUE HDMI 8K (7680 x 4320) Ultra HD Cable + Ethernet, M/M, black, 3 m	11.99.5903	10

ROLINE HDMI 8K (7680 x 4320) Ultra HD Cables + Ethernet

8K | 4320p UHD-2 | 3D capable

High quality HDMI cable with HDMI connectors for optimal transmission of digital UHD signals at data rates up to 35.8 Gbit/s. For transfer of films in digital cinema quality with up to 8K at 60Hz.

- HDMI Ethernet Channel- Adds high-speed networking to an HDMI link, allowing users to take full advantage of their IP-enabled devices without a separate ethernet cable
- Audio Return Channel- Allows a HDMI-connected TV with a built-in tuner to send audio data „upstream“ to a surround audio system, eliminating the need for a separate audio cable
- 3D- Defines input/output protocols for major 3D video formats
- 8k support- Enables video resolutions up to 4320p @60Hz far beyond 1080p, supporting next-generation displays
- Cable with HDMI male connector on both sides
- High quality cable with golden metal connector housing and shell for better shielding
- Gold plated contacts for higher durability



	Order-No.	P.U.
ROLINE HDMI 8K (7680 x 4320) Ultra HD Cable + Ethernet, M/M, red, 1 m	11.04.5901	10
ROLINE HDMI 8K (7680 x 4320) Ultra HD Cable + Ethernet, M/M, red, 2 m	11.04.5902	10
ROLINE HDMI 8K (7680 x 4320) Ultra HD Cable + Ethernet, M/M, red, 3 m	11.04.5903	10
ROLINE HDMI 8K (7680 x 4320) Ultra HD Cable + Ethernet, M/M, red, 5 m	11.04.5905	10

VALUE / ROLINE HDMI 10K Ultra High Speed Cables

10K | 7760p UHS

High quality HDMI cable with resolutions up to 10K (10240 x 4320) at 30Hz!

- Supports a resolution of up to 10240x4320 pixels at a refresh rate of up to 30Hz!
- Maximum resolutions: 10K (10240x4320) @30Hz; 8K (7680x4320) @30Hz; 5K (5120x2880) @120Hz; 4K (3840x2160) @240Hz
- Dynamic HDR for particularly rich colours
- Display Stream Compression (DSC) 1.2 at particularly high resolutions on from 8K
- Variable refresh rate (VRR), to eliminate delays and jerky images
- Supports 3D video output
- Gold-plated contacts for secure data transmission



	Order-No.	P.U.
VALUE HDMI 10K Ultra High Speed Cable, M/M, black, 1 m	11.99.5940	10
VALUE HDMI 10K Ultra High Speed Cable, M/M, black, 1.5 m	11.99.5941	10
VALUE HDMI 10K Ultra High Speed Cable, M/M, black, 2 m	11.99.5942	10
VALUE HDMI 10K Ultra High Speed Cable, M/M, black, 3 m	11.99.5943	10

	Order-No.	P.U.
ROLINE HDMI 10K Ultra High Speed Cable, M/M, black, 1 m	11.04.5940	10
ROLINE HDMI 10K Ultra High Speed Cable, M/M, black, 1.5 m	11.04.5941	10
ROLINE HDMI 10K Ultra High Speed Cable, M/M, black, 2 m	11.04.5942	10
ROLINE HDMI 10K Ultra High Speed Cable, M/M, black, 3 m	11.04.5943	10
ROLINE HDMI 10K Ultra High Speed Cable, M/M, black, 5 m	11.04.5944	10

VALUE DisplayPort Cables, DP-DP

4K | 2160p ULTRA HD



VALUE DisplayPort Cable with DP connection on both sides for connecting an Ultrabook, Notebook/Laptop or PC to a monitor, TV or projector - for screen transmissions in excellent quality with resolutions of up to 3840x2160 @60Hz!

- DisplayPort is a universal connection standard for the transmission of picture and sound signals. Applications include mainly the connection of monitors and televisions to computers, BluRay players and similar devices.
- The connector requires less space and is therefore more suitable for portable display devices (ultrabooks, notebooks/laptops) or for 2 connectors on a graphics card (on a slot plate).
- The practical plug design prevents the cable from slipping out of the DisplayPort socket.
- Compliant DP v1.2 (max. 3840 x 2160 @60Hz)

Value®

	Order-No.	P.U.
VALUE DisplayPort Cable, DP-DP, M/M, black, 1 m	11.99.5601	20
VALUE DisplayPort Cable, DP-DP, M/M, black, 1.5 m	11.99.5629	20
VALUE DisplayPort Cable, DP-DP, M/M, black, 2 m	11.99.5602	10
VALUE DisplayPort Cable, DP-DP, M/M, black, 3 m	11.99.5603	10
VALUE DisplayPort Cable, DP-DP, M/M, black, 5 m	11.99.5605	10
VALUE DisplayPort Cable, DP-DP, M/M, black, 7.5 m	11.99.5604	6
VALUE DisplayPort Cable, DP-DP, M/M, black, 10 m	11.99.5609	5

*Halogenfree Flame Retardant Low Smoke

	Order-No.	P.U.
VALUE DisplayPort Cable, DP-DP, LSOH, M/M, 1 m	11.99.5761	20
VALUE DisplayPort Cable, DP-DP, LSOH, M/M, 1.5 m	11.99.5767	20
VALUE DisplayPort Cable, DP-DP, LSOH, M/M, 2 m	11.99.5762	10
VALUE DisplayPort Cable, DP-DP, LSOH, M/M, 3 m	11.99.5763	10
VALUE DisplayPort Cable, DP-DP, LSOH, M/M, 5 m	11.99.5764	10
VALUE DisplayPort Cable, DP-DP, LSOH, M/M, 7.5 m	11.99.5765	10
VALUE DisplayPort Cable, DP-DP, LSOH, M/M, 10 m	11.99.5766	5

ROLINE DisplayPort Cables, DP-DP

4K | 2160p ULTRA HD



ROLINE DisplayPort Cable with DP connection on both sides for connecting an Ultrabook, Notebook/Laptop or PC to a monitor, TV or projector - for screen transmissions in excellent quality with resolutions of up to 3840x2160 @60Hz!

- DisplayPort is a universal connection standard for the transmission of picture and sound signals. Applications include mainly the connection of monitors and televisions to computers, BluRay players and similar devices.
- The connector requires less space and is therefore more suitable for portable display devices (ultrabooks, notebooks/laptops) or for 2 connectors on a graphics card (on a slot plate).
- The practical plug design prevents the cable from slipping out of the DisplayPort socket.
- Compliant DP v1.2 (max. 3840 x 2160 @60Hz)

roline®
Designed for Professionals

	Order-No.	P.U.
ROLINE DisplayPort Cable, DP-DP, M/M, black, 1 m	11.04.5601	20
ROLINE DisplayPort Cable, DP-DP, M/M, black, 1.5 m	11.04.5629	20
ROLINE DisplayPort Cable, DP-DP, M/M, black, 2 m	11.04.5602	20
ROLINE DisplayPort Cable, DP-DP, M/M, black, 3 m	11.04.5603	20
ROLINE DisplayPort Cable, DP-DP, M/M, black, 5 m	11.04.5605	10
ROLINE DisplayPort Cable, DP-DP, M/M, black, 7.5 m	11.04.5604	10
ROLINE DisplayPort Cable, DP-DP, M/M, black, 10 m	11.04.5609	5

*Halogenfree Flame Retardant Low Smoke

	Order-No.	P.U.
ROLINE DisplayPort Cable, DP-DP, LSOH, M/M, 1 m	11.04.5761	20
ROLINE DisplayPort Cable, DP-DP, LSOH, M/M, 1.5 m	11.04.5767	20
ROLINE DisplayPort Cable, DP-DP, LSOH, M/M, 2 m	11.04.5762	20
ROLINE DisplayPort Cable, DP-DP, LSOH, M/M, 3 m	11.04.5763	20
ROLINE DisplayPort Cable, DP-DP, LSOH, M/M, 5 m	11.04.5764	10
ROLINE DisplayPort Cable, DP-DP, LSOH, M/M, 7.5 m	11.04.5765	10
ROLINE DisplayPort Cable, DP-DP, LSOH, M/M, 10 m	11.04.5766	5

ROLINE DisplayPort Cables, v1.2, DP-DP

4K

For the connection of e. g. mobile phones / smartphones or digital cameras / DSLRs.

- Cable with DisplayPort male connector on both sides
- Double shielded
- High quality cable with golden shell for better shielding
- Gold plated contacts for enhanced durability
- Nylon-reinforced outer material for a better stability



	Order-No.	P.U.
ROLINE DisplayPort Cable, DP-DP, v1.2, M/M, 1 m	11.04.5880	20
ROLINE DisplayPort Cable, DP-DP, v1.2, M/M, 1.5 m	11.04.5886	20
ROLINE DisplayPort Cable, DP-DP, v1.2, M/M, 2 m	11.04.5881	20
ROLINE DisplayPort Cable, DP-DP, v1.2, M/M, 3 m	11.04.5882	20

roline®
Designed for Professionals

ROLINE DisplayPort Cables, v1.2, TPE, DP-DP

NEW 4K 2160p UHD-1

ROLINE DisplayPort v1.2 cable with DP connection on both sides and highly flexible TPE outer jacket for connecting an Ultrabook, Notebook/Laptop or PC with a monitor, TV, beamer or projector - for screen transmissions in excellent quality with a resolution of up to 3840x2160 / 4096x2560 @60Hz!

- The cable complies with the DisplayPort v1.2 standard and therefore easily reaches resolutions in the range of 4K@60Hz
- The connection requires little space and is therefore best suited for portable display devices (ultrabooks, notebooks/laptops) or for 2 connections on a graphics card (on one slot level)
- The practical plug design prevents the cable from slipping out of the DisplayPort socket
- Elastic and very flexible thanks to TPE outer sheath- best properties for cable ducts and similar applications where space is limited
- Material: TPE (Thermoplastic Elastomer)
- Compliant DP v1.2 (max. 4096 x 2560 @60Hz)



	Order-No. – P.U.
ROLINE DisplayPort Cable, v1.2, TPE, DP-DP, M/M, black, 1 m	11.04.5980 – 20
ROLINE DisplayPort Cable, v1.2, TPE, DP-DP, M/M, black, 1.5 m	11.04.5981 – 20
ROLINE DisplayPort Cable, v1.2, TPE, DP-DP, M/M, black, 2 m	11.04.5982 – 20
ROLINE DisplayPort Cable, v1.2, TPE, DP-DP, M/M, black, 3 m	11.04.5983 – 20
ROLINE DisplayPort Cable, v1.2, TPE, DP-DP, M/M, black, 5 m	11.04.5984 – 10
ROLINE DisplayPort Cable, v1.2, TPE, DP-DP, M/M, black, 7.5 m	11.04.5985 – 10
ROLINE DisplayPort Cable, v1.2, TPE, DP-DP, M/M, black, 10 m	11.04.5986 – 5

roline®
Designed for Professionals

VALUE DisplayPort Cables, v1.4, DP-DP

8K 4320p

DisplayPort Cables with DP connection on both sides for connecting an Ultrabook, Notebook/Laptop or PC to a monitor, TV or projector - for screen transmissions in excellent quality with resolutions of up to 7680x4320 @30Hz!

- The practical plug design prevents the cable from slipping out of the DisplayPort socket.
- Compliant to DP v1.4 (max. 7680x4320 @30Hz)



	Order-No. – P.U.
VALUE DisplayPort Cable, v1.4, DP-DP, M/M, black, 1 m	11.99.5810 – 20
VALUE DisplayPort Cable, v1.4, DP-DP, M/M, black, 1.5 m	11.99.5798 – 20
VALUE DisplayPort Cable, v1.4, DP-DP, M/M, black, 2 m	11.99.5811 – 10
VALUE DisplayPort Cable, v1.4, DP-DP, M/M, black, 3 m	11.99.5812 – 10

ROLINE DisplayPort Cables, v1.4, DP-DP

8K 4320p

DisplayPort Cables with DP connection on both sides for connecting an Ultrabook, Notebook/Laptop or PC to a monitor, TV or projector - for screen transmissions in excellent quality with resolutions of up to 7680x4320 @30Hz!

- The practical plug design prevents the cable from slipping out of the DisplayPort socket.
- Compliant to DP v1.4 (max. 7680x4320 @30Hz)



	Order-No. – P.U.
ROLINE DisplayPort Cable, v1.4, DP-DP, M/M, black, 1 m	11.04.5810 – 20
ROLINE DisplayPort Cable, v1.4, DP-DP, M/M, black, 1.5 m	11.04.5798 – 20
ROLINE DisplayPort Cable, v1.4, DP-DP, M/M, black, 2 m	11.04.5811 – 10
ROLINE DisplayPort Cable, v1.4, DP-DP, M/M, black, 3 m	11.04.5812 – 10
ROLINE DisplayPort Cable, v1.4, DP-DP, M/M, black, 5 m	11.04.5813 – 10

roline®
Designed for Professionals

ROLINE DisplayPort Cable, v1.4, DP-DP

NEW 8K 4320p

ROLINE DisplayPort Cable with DP connection on both sides for connecting an Ultrabook, Notebook/Laptop or PC to a monitor, TV or projector - for screen transmissions in excellent quality with resolutions of up to 7680x4320 @60Hz!

- DisplayPort is a universal connection standard for the transmission of picture and sound signals, widely known and appreciated in computer, industry and modern house wiring. Applications include mainly the connection of monitors or projectors to computers, notebooks/laptops, ultrabooks, NUCs and similar devices.
- The connector requires less space than VGA or DVI and is therefore more suitable for portable devices for two connectors on a graphics card (on one slot plate).
- DisplayPort v1.4 supports Display Stream Compression 1.2a (DSC), Forward Error Correction and the HDR10 standard.
- The robust nylon braid protects the DisplayPort cable effectively and sets it in scene visually.
- DP v1.4 can reach a maximum resolution of 8K (7680x4320) @60Hz or 4K (3840x2160) @120Hz
- The practical plug design prevents the cable from slipping out of the DisplayPort socket and guarantees a stable audio and video transmission.
- Compliant DP v1.4 (max. 7680 x 4320 @60Hz)



	Order-No.	– P.U.
ROLINE DisplayPort Cable, v1.4, DP-DP, M/M, black, 1 m	11.04.5866	– 20
ROLINE DisplayPort Cable, v1.4, DP-DP, M/M, black, 2 m	11.04.5867	– 20
ROLINE DisplayPort Cable, v1.4, DP-DP, M/M, black, 3 m	11.04.5868	– 20

roline® Designed for Professionals

ROLINE DisplayPort Cables, v1.4, DP-DP, SLIM

NEW 8K 4320p

ROLINE DisplayPort Cable with DP connection on both sides for connecting an Ultrabook, Notebook/Laptop or PC to a monitor, TV or projector - for screen transmissions in excellent quality with resolutions of up to 7680x4320 @60Hz!

- DisplayPort v1.4 supports Display Stream Compression 1.2a (DSC), Forward Error Correction and the HDR10 standard.
- DP v1.4 can reach a maximum resolution of 8K (7680x4320) @60Hz or 4K (3840x2160) @120Hz
- The practical plug design prevents the cable from slipping out of the DisplayPort socket and guarantees a stable audio and video transmission.
- This particular cable has a slim outer diameter to allow an even more flexible wiring and on the go usage
- The red connector fillings mark the cable as a high quality product and may help to identify it fast in an environment with a lot of different DisplayPort cables
- Compliant DP v1.4 (max. 7680 x 4320 @60Hz)



	Order-No.	– P.U.
ROLINE DisplayPort Cable, v1.4, DP-DP, M/M, SLIM, black, 1 m	11.04.5960	– 20
ROLINE DisplayPort Cable, v1.4, DP-DP, M/M, SLIM, black, 1.5 m	11.04.5961	– 20

roline® Designed for Professionals

ROLINE Thunderbolt™ 3 Cable, 40G, 5A, M/M

5K 2880p

Thunderbolt 3 cables with the USB Type C connector offer you the currently highest possible data transfer rate of up to 40GBit/s (20GBit/s for 1m and 2m) and full Power Delivery support (PD up to 20V 5A / 100W)! The cables also feature DP mode for particularly high-resolution image and sound transmission of up to 5120x2880 @60Hz (5K).

- Thunderbolt protocols allow maximum data transfer rates of up to 40GBit/s (20GBit/s for 1m and 2m)
- DP mode for connecting a monitor with USB Type C / Thunderbolt 3 connector, with a maximum resolution of 5120x2880 (5K)
- One of the best applications is to connect your Thunderbolt 3 cable with a Thunderbolt device like a corresponding MacBook and matching USB Type C monitor; If Thunderbolt 3 is supported, the full 5K resolution is possible (4K, 3840x2160 @60Hz with USB 3.1 support) and your device gets powered at the same time
- Supports USB Power Delivery up to 20V 5A / 100W, for powering your Macbook, Ultrabook or notebook/laptop
- High-quality cable with improved shielding
- With reversible USB type C connector at both ends
- Gold plated contacts for low wear at high mating cycles



Thunderbolt and the Thunderbolt logo are trademarks of Intel Corporation in the U.S. and/or other countries.



	Order-No.	– P.U.
ROLINE Thunderbolt™ 3 Cable, 40G, 5A, M/M, black, 0.5 m	11.02.9040	– 10
ROLINE Thunderbolt™ 3 Cable, 20G, 5A, M/M, black, 1 m	11.02.9041	– 10
ROLINE Thunderbolt™ 3 Cable, 20G, 5A, M/M, black, 2 m	11.02.9042	– 10

roline® Designed for Professionals

VALUE DisplayPort Cables, DP - Mini DP

2K 1600p

DisplayPort is a digital display interface standard that defines a new digital audio/video interconnection. The intension of the DisplayPort is to be used primarily between a computer and its display monitor, or a computer and a home-theater. The DisplayPort and the HDMI signal are compatible.

- Cable with DisplayPort male to Mini DisplayPort male (e.g. for MAC)
- **Compliant DP v1.1**



	Order-No. – P.U.
VALUE DisplayPort Cable, DP - Mini DP, M/M, black, 1 m	11.99.5634 – 20
VALUE DisplayPort Cable, DP - Mini DP, M/M, black, 1.5 m	11.99.5638 – 20
VALUE DisplayPort Cable, DP - Mini DP, M/M, black, 2 m	11.99.5635 – 20
VALUE DisplayPort Cable, DP - Mini DP, M/M, black, 3 m	11.99.5636 – 20
VALUE DisplayPort Cable, DP - Mini DP, M/M, black, 5 m	11.99.5637 – 10

ROLINE DisplayPort Cables, DP - Mini DP

2K 1600p

DisplayPort is a digital display interface standard that defines a new digital audio/video interconnection. The intension of the DisplayPort is to be used primarily between a computer and its display monitor, or a computer and a home-theater. The DisplayPort and the HDMI signal are compatible.

- Cable with DisplayPort male to Mini DisplayPort male (e.g. for MAC)
- **Compliant DP v1.1**



	Order-No. – P.U.
ROLINE DisplayPort Cable, DP - Mini DP, M/M, black, 1 m	11.04.5634 – 20
ROLINE DisplayPort Cable, DP - Mini DP, M/M, black, 1.5 m	11.04.5638 – 20
ROLINE DisplayPort Cable, DP - Mini DP, M/M, black, 2 m	11.04.5635 – 20
ROLINE DisplayPort Cable, DP - Mini DP, M/M, black, 3 m	11.04.5636 – 20
ROLINE DisplayPort Cable, DP - Mini DP, M/M, black, 5 m	11.04.5637 – 10

ROLINE Mini DisplayPort Cables, v1.4, Mini DP - DP

8K 4320p

ROLINE DisplayPort cable with a Mini DP and a DP connector for connecting an ultrabook, notebook/laptop or PC to a monitor, TV or projector - for screen transmissions in excellent quality with a resolution of up to 7680x4320 @30Hz!

- DisplayPort is a universal connection standard for the transmission of picture and sound signals. Applications include mainly the connection of monitors and televisions to computers, BluRay players and similar devices.
- The connector requires less space and is therefore more suitable for portable display devices (ultrabooks, notebooks/laptops) or for 2 connectors on a graphics card (on a slot plate).
- The practical plug design prevents the cable from slipping out of the DisplayPort socket.
- Compliant to DP v1.4 (max. 7680x4320 @30Hz)



	Order-No. – P.U.
ROLINE Mini DisplayPort Cable, v1.4, Mini DP - DP, M/M, black, 1 m	11.04.5814 – 20
ROLINE Mini DisplayPort Cable, v1.4, Mini DP - DP, M/M, black, 2 m	11.04.5815 – 10

ROLINE Mini DisplayPort Cables, v1.1, Mini DP - Mini DP

2K 1600p

DisplayPort is a digital display interface standard that defines a new digital audio/video interconnection. The intension of the DisplayPort is to be used primarily between a computer and its display monitor, or a computer and a home-theater.

- **Compliant DP v1.1**



	Order-No. – P.U.
ROLINE Mini DisplayPort Cable, Mini DP - Mini DP, M/M, 2 m	11.04.5640 – 20
ROLINE Mini DisplayPort Cable, Mini DP - Mini DP, M/M, 3 m	11.04.5641 – 20

ROLINE Mini DisplayPort Cables, v1.4, Mini DP - Mini DP

8K 4320p

ROLINE DisplayPort Cable with Mini DP connection on both sides for connecting an Ultrabook, Notebook/Laptop or PC to a monitor, TV or projector - for screen transmissions in excellent quality with resolutions of up to 7680x4320 @30Hz!

- DisplayPort is a universal connection standard for the transmission of picture and sound signals. Applications include mainly the connection of monitors and televisions to computers, BluRay players and similar devices.
- The connector requires less space and is therefore more suitable for portable display devices (ultrabooks, notebooks/laptops) or for 2 connectors on a graphics card (on a slot plate).
- Compliant to DP v1.4 (max. 7680 x 4320 @30Hz)



	Order-No. – P.U.
ROLINE Mini DisplayPort Cable, v1.4, Mini DP - Mini DP, M/M, black, 1 m	11.04.5817 – 20
ROLINE Mini DisplayPort Cable, v1.4, Mini DP - Mini DP, M/M, black, 2 m	11.04.5818 – 10

VALUE / ROLINE DisplayPort Cable, DP-DVI (24+1)

Connect your graphics card to a monitor with DVI connection via DisplayPort - with a maximum resolution of up to 1920x1080 @60Hz!

- DVI is the standard for digital video transmission in the computer sector.
- Display Port is the new standard for digital audio/video transmission in the TV and multimedia sector, e. g. for connecting a monitor with DVI interface to a graphic card with DisplayPort connection. The DisplayPort is signal compatible to DVI.
- Cable with one DisplayPort connector and one DVI connector
- Compliant DP v1.1 (max. 1920 x 1080 / 1920 x 1200 @60Hz)

Remark: The DisplayPort to DVI cable is only working in one direction: the DisplayPort plug has to be connected to the source device (e.g. graphic card)



*Halogenfree Flame Retardant Low Smoke

2K 1080p FULL HD

	Order-No. – P.U.
VALUE DisplayPort Cable, DP-DVI (24+1), M/M, black, 1.0 m	11.99.5613 – 10
VALUE DisplayPort Cable, DP-DVI (24+1), M/M, black, 1.5 m	11.99.5619 – 10
VALUE DisplayPort Cable, DP-DVI (24+1), M/M, black, 2.0 m	11.99.5610 – 10
VALUE DisplayPort Cable, DP-DVI (24+1), M/M, black, 5.0 m	11.99.5612 – 10
VALUE DisplayPort Cable, DP-DVI (24+1), M/M, black, 3.0 m	11.99.5611 – 10
VALUE DisplayPort Cable, DP-DVI (24+1), LSOH*, M/M, black, 1.0 m	11.99.5614 – 10
VALUE DisplayPort Cable, DP-DVI (24+1), LSOH*, M/M, black, 1.5 m	11.99.5608 – 10
VALUE DisplayPort Cable, DP-DVI (24+1), LSOH*, M/M, black, 2.0 m	11.99.5615 – 10
VALUE DisplayPort Cable, DP-DVI (24+1), LSOH*, M/M, black, 3.0 m	11.99.5616 – 10
VALUE DisplayPort Cable, DP-DVI (24+1), LSOH*, M/M, black, 5.0 m	11.99.5617 – 10

Designed for Professionals

*Halogenfree Flame Retardant Low Smoke

2K 1080p FULL HD

	Order-No. – P.U.
ROLINE DisplayPort Cable, DP-DVI (24+1), M/M, black, 1.0 m	11.04.5613 – 10
ROLINE DisplayPort Cable, DP-DVI (24+1), M/M, black, 1.5 m	11.04.5619 – 10
ROLINE DisplayPort Cable, DP-DVI (24+1), M/M, black, 2.0 m	11.04.5610 – 10
ROLINE DisplayPort Cable, DP-DVI (24+1), M/M, black, 3.0 m	11.04.5611 – 10
ROLINE DisplayPort Cable, DP-DVI (24+1), M/M, black, 5.0 m	11.04.5612 – 10
ROLINE DisplayPort Cable, DP-DVI (24+1), LSOH*, M/M, black, 1.0 m	11.04.5771 – 20
ROLINE DisplayPort Cable, DP-DVI (24+1), LSOH*, M/M, black, 1.5 m	11.04.5775 – 20
ROLINE DisplayPort Cable, DP-DVI (24+1), LSOH*, M/M, black, 2.0 m	11.04.5772 – 20
ROLINE DisplayPort Cable, DP-DVI (24+1), LSOH*, M/M, black, 3.0 m	11.04.5773 – 20
ROLINE DisplayPort Cable, DP-DVI (24+1), LSOH*, M/M, black, 5.0 m	11.04.5774 – 10

VALUE / ROLINE (Mini-) DisplayPort - VGA Cable, (Mini-) DP - VGA

Mini DisplayPort to VGA cable for connecting a graphics card with MiniDP to a monitor with VGA connector - with a resolution of up to 1920x1080@60Hz!

- For connecting a graphic card with Mini DisplayPort connector to a VGA monitor
- Supports maximum resolutions of up to 1920x1080 @60Hz
- The lock mechanisms of VGA prevent the plugs from slipping out of the source/ display and secure the connection
- Connectors: Mini DisplayPort Male and VGA Male

• Remark: The Mini DisplayPort-VGA cable is only working in one direction: the Mini DisplayPort plug has to be connected to the source device (e.g. graphic card)



2K 1080p FULL HD

	Order-No. – P.U.
VALUE Cable DisplayPort - VGA, M / M, black, 1 m	11.99.5800 – 20
VALUE Cable DisplayPort - VGA, M / M, black, 1.5 m	11.99.5801 – 15
VALUE Cable DisplayPort - VGA, M / M, black, 2 m	11.99.5802 – 10
VALUE Cable DisplayPort - VGA, M / M, black, 3 m	11.99.5803 – 10
VALUE Cable DisplayPort - VGA, M / M, black, 5 m	11.99.5804 – 10

	Order-No. – P.U.
VALUE Cable MiniDisplayPort - VGA, Mini DP M - VGA M, black, 1 m	11.99.5805 – 20
VALUE Cable MiniDisplayPort - VGA, Mini DP M - VGA M, black, 1.5 m	11.99.5806 – 15
VALUE Cable MiniDisplayPort - VGA, Mini DP M - VGA M, black, 2 m	11.99.5807 – 10
VALUE Cable MiniDisplayPort - VGA, Mini DP M - VGA M, black, 3 m	11.99.5808 – 10
VALUE Cable MiniDisplayPort - VGA, Mini DP M - VGA M, black, 5 m	11.99.5809 – 10

Designed for Professionals

2K 1080p FULL HD

	Order-No. – P.U.
ROLINE Cable MiniDisplayPort - VGA, Mini DP M - VGA M, black, 1 m	11.04.5975 – 20
ROLINE Cable MiniDisplayPort - VGA, Mini DP M - VGA M, black, 1.5 m	11.04.5976 – 15
ROLINE Cable MiniDisplayPort - VGA, Mini DP M - VGA M, black, 2 m	11.04.5977 – 10
ROLINE Cable MiniDisplayPort - VGA, Mini DP M - VGA M, black, 3 m	11.04.5978 – 10
ROLINE Cable MiniDisplayPort - VGA, Mini DP M - VGA M, black, 5 m	11.04.5979 – 10

	Order-No. – P.U.
ROLINE Cable DisplayPort - VGA, M / M, black, 1 m	11.04.5970 – 20
ROLINE Cable DisplayPort - VGA, M / M, black, 1.5 m	11.04.5971 – 15
ROLINE Cable DisplayPort - VGA, M / M, black, 2 m	11.04.5972 – 10
ROLINE Cable DisplayPort - VGA, M / M, black, 3 m	11.04.5973 – 10
ROLINE Cable DisplayPort - VGA, M / M, black, 5 m	11.04.5974 – 10

VALUE ROLINE Mini-/DisplayPort Cable, DP - HDTV

2K 1080p FULL HD

DisplayPort to HDTV cable for transferring content from your graphics card (DisplayPort) to your TV (HDTV) - with a quality of up to 1920x1080 @60Hz, incl. audio transmission!

- HDTV is the standard for digital video transmission in the TV/multimedia sector for e. g.: Connection of a TV set with HDMI interface to a playback device with DisplayPort connection.
- Cable with one DisplayPort and one HDTV plug. DisplayPort is signal compatible with HDMI.
- Note: A DisplayPort HDTV cable can only be used in one direction: the DisplayPort connector can only be used on the data source side (e.g. graphics card).



Value® roline® Designed for Professionals

	Order-No.	P.U.
VALUE DisplayPort Cable, DP - HDTV, M/M, black, 1 m	11.99.5780	10
VALUE DisplayPort Cable, DP - HDTV, M/M, black, 1.5 m	11.99.5779	10
VALUE DisplayPort Cable, DP - HDTV, M/M, black, 2 m	11.99.5781	10
VALUE DisplayPort Cable, DP - HDTV, M/M, black, 3 m	11.99.5782	10
VALUE DisplayPort Cable, DP - HDTV, M/M, black, 4.5 m	11.99.5783	10
VALUE DisplayPort Cable, DP - HDTV, M/M, black, 10 m	11.99.5784	5
VALUE Mini DisplayPort Cable, Mini DP-HDTV, M/M, black, 1 m	11.99.5790	10
VALUE Mini DisplayPort Cable, Mini DP-HDTV, M/M, black, 2 m	11.99.5791	10
VALUE Mini DisplayPort Cable, Mini DP-HDTV, M/M, black, 3 m	11.99.5792	10
VALUE Mini DisplayPort Cable, Mini DP-HDTV, M/M, black, 4.5 m	11.99.5793	10

	Order-No.	P.U.
ROLINE DisplayPort Cable, DP - HDTV, M/M, black, 1 m	11.04.5780	10
ROLINE DisplayPort Cable, DP - HDTV, M/M, black, 1.5 m	11.04.5779	10
ROLINE DisplayPort Cable, DP - HDTV, M/M, black, 2 m	11.04.5781	10
ROLINE DisplayPort Cable, DP - HDTV, M/M, black, 3 m	11.04.5782	10
ROLINE DisplayPort Cable, DP - HDTV, M/M, black, 4.5 m	11.04.5783	10
ROLINE Mini DisplayPort Cable, Mini DP-HDTV, M/M, black, 1 m	11.04.5790	10
ROLINE Mini DisplayPort Cable, Mini DP-HDTV, M/M, black, 1.5 m	11.04.5789	10
ROLINE Mini DisplayPort Cable, Mini DP-HDTV, M/M, black, 2 m	11.04.5791	10
ROLINE Mini DisplayPort Cable, Mini DP-HDTV, M/M, black, 3 m	11.04.5792	10
ROLINE Mini DisplayPort Cable, Mini DP-HDTV, M/M, black, 4.5 m	11.04.5793	10

VALUE / ROLINE DP/Mini DisplayPort Cable, DP/Mini DP-UHDTV

4K 2160p UHD-1

Mini DisplayPort to UHDTV cable for transferring content from your graphics card (DisplayPort) to your TV (UHDTV) - with a quality of up to 3840x2160 @60Hz, incl. audio transmission!

- UHDTV is the standard for digital video transmission in the TV/multimedia sector for e. g.: Connection of a TV set with HDMI interface to a player with Mini DisplayPort connection.
- Cable with one Mini DisplayPort and one HDTV plug. DisplayPort is signal compatible with HDMI.
- Note: A DisplayPort UHDTV cable can only be used in one direction: the Mini DisplayPort connector can only be used on the data source side (e. g. graphics card, Macbook, Ultrabook, laptop/ notebook or PC).



Value® roline® Designed for Professionals

	Order-No.	P.U.
VALUE DisplayPort Cable, DP - UHDTV, M/M, black, 1 m	11.99.5785	10
VALUE DisplayPort Cable, DP - UHDTV, M/M, black, 2 m	11.99.5786	10
VALUE DisplayPort Cable, DP - UHDTV, M/M, black, 3 m	11.99.5787	10
VALUE DisplayPort Cable, DP - UHDTV, M/M, black, 5 m	11.99.5788	10
VALUE DisplayPort Cable, DP - UHDTV, M/M, black, 7.5 m	11.99.5789	10
VALUE Mini DisplayPort Cable, Mini DP-UHDTV, M/M, black, 1 m	11.99.5795	10
VALUE Mini DisplayPort Cable, Mini DP-UHDTV, M/M, black, 2 m	11.99.5796	10
VALUE Mini DisplayPort Cable, Mini DP-UHDTV, M/M, black, 3 m	11.99.5797	10

	Order-No.	P.U.
ROLINE DisplayPort Cable, DP - UHDTV, M/M, black, 1 m	11.04.5785	10
ROLINE DisplayPort Cable, DP - UHDTV, M/M, black, 2 m	11.04.5786	10
ROLINE DisplayPort Cable, DP - UHDTV, M/M, black, 3 m	11.04.5787	10
ROLINE DisplayPort Cable, DP - UHDTV, M/M, black, 5 m	11.04.5788	10
ROLINE DisplayPort Cable, DP - UHDTV, M/M, black, 7.5 m	11.04.5776	10
ROLINE DisplayPort Cable, DP - UHDTV, M/M, black, 10 m	11.04.5777	10
ROLINE Mini DisplayPort Cable, Mini DP-UHDTV, M/M, black, 1 m	11.04.5795	10
ROLINE Mini DisplayPort Cable, Mini DP-UHDTV, M/M, black, 2 m	11.04.5796	10
ROLINE Mini DisplayPort Cable, Mini DP-UHDTV, M/M, black, 3 m	11.04.5797	10

ROLINE Cables, UHDTV - DisplayPort, 4K

NEW

4K 2160p UHD-1

UHDTV to DisplayPort cable for transferring content from your graphics card (UHDTV) to your monitor (DisplayPort) - with a quality of up to 3840x2160 @60Hz, incl. audio transmission!

- HDTV is the standard for digital video transmission in the TV/multimedia sector for e. g.: Connection of a device with HDMI interface to a monitor with DisplayPort connection.
- Cable with one DisplayPort and one HDTV plug.
- Note: A UHDTV cable can only be used in one direction: the HDMI connector can only be used on the data source side (e. g. graphics card).





roline® Designed for Professionals

	Order-No.	P.U.
ROLINE Cable, UHDTV - DisplayPort, M/M, black, 1 m	11.04.5991	10
ROLINE Cable, UHDTV - DisplayPort, M/M, black, 2 m	11.04.5992	10
ROLINE Cable, UHDTV - DisplayPort, M/M, black, 3 m	11.04.5993	10

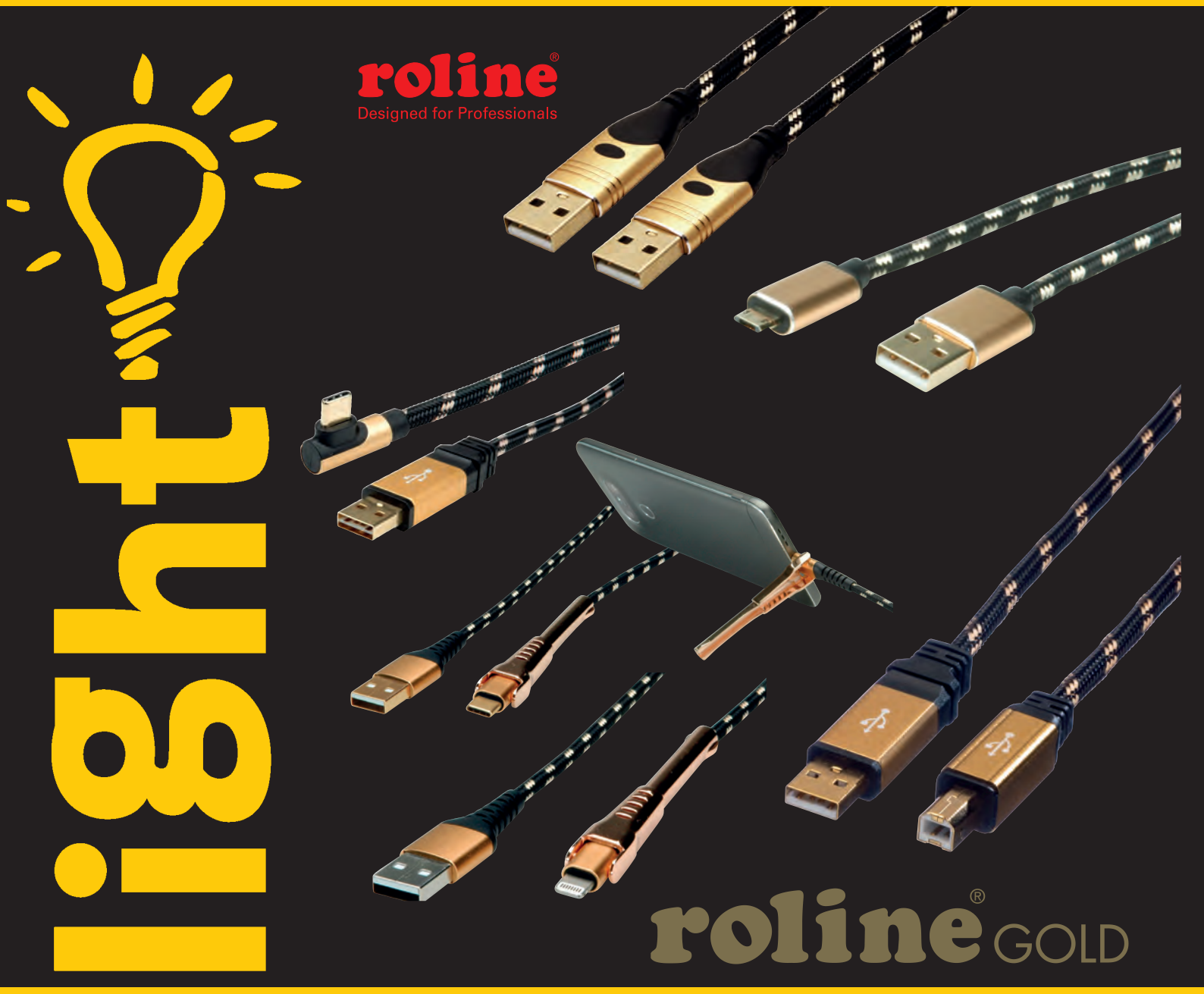

Highlight

ROLINE GOLD USB 2.0 Cables

ROLINE GOLD - Top quality without any compromises!Cables in ROLINE GOLD quality come with high quality shielding and gilded contacts for contact safety even at high plug-in cycles. The plugs are gold coated to enhance their contact durability. Nylon-reinforced outer material in golden/black provides a better stability and gives the cable a stunning look.

- The plugs are gold coated to enhance their contact durability
- Nylon-reinforced outer material for a better stability
- Supports data transfer rates of up to 480 Mbit/s

	Order-No.	– P.U.
ROLINE GOLD USB 2.0 Cable, A - B, M/M, 1.8 m	11.02.8802	– 10
ROLINE GOLD USB 2.0 Cable, A - B, M/M, 3.0 m	11.02.8803	– 10
ROLINE GOLD USB 2.0 Cable, A - B, M/M, 4.5 m	11.02.8805	– 5
ROLINE GOLD USB 2.0 Cable, A - 5-Pin Mini, M/M, 0.8 m	11.02.8821	– 10
ROLINE GOLD USB 2.0 Cable, A - 5-Pin Mini, M/M, 1.8 m	11.02.8822	– 10
ROLINE GOLD USB 2.0 Cable, A - 5-Pin Mini, M/M, 3.0 m	11.02.8823	– 10
ROLINE GOLD USB 2.0 Cable, A - Micro B, M/M, 0.8 m	11.02.8825	– 10
ROLINE GOLD USB 2.0 Cable, A - Micro B, M/M, 1.8 m	11.02.8826	– 10
ROLINE GOLD USB 2.0 Cable, A - A, M/M, 0.8 m	11.02.8911	– 20
ROLINE GOLD USB 2.0 Cable, A - A, M/M, 1.8 m	11.02.8912	– 50
ROLINE GOLD USB 2.0 Cable, A - A, M/M, 3 m	11.02.8913	– 50
ROLINE GOLD USB 2.0 Cable, reversible A - C 90° angled, M/M, 0.8 m	11.02.9060	– 10
ROLINE GOLD USB 2.0 Cable, reversible A - C 90° angled, M/M, 1.8 m	11.02.9061	– 10
ROLINE GOLD USB 2.0 Cable, reversible A - C 90° angled, M/M, 3 m	11.02.9062	– 10
ROLINE GOLD USB 2.0 Cable, C - Micro B (reversible), M/M, 1.8 m	11.02.8790	– 10
ROLINE GOLD USB 2.0 Cable, C - Micro B (reversible), M/M, 3 m	11.02.8791	– 10
ROLINE GOLD USB 2.0 Cable, C - Micro B (reversible), M/M, 4.5 m	11.02.8792	– 5
ROLINE GOLD USB 2.0 Cable, A - Micro B (reversible), M/M, 0.8 m	11.02.8819	– 10
ROLINE GOLD USB 2.0 Cable, A - Micro B (reversible), M/M, 1.8 m	11.02.8820	– 10
NEW ROLINE GOLD USB 2.0 A - Type C SELF-STAND Cable, M/M, 1m	11.02.8920	– 10
ROLINE GOLD USB 2.0 A - 8pin SELF-STAND Cable, M/M, 1m	11.02.8923	– 10



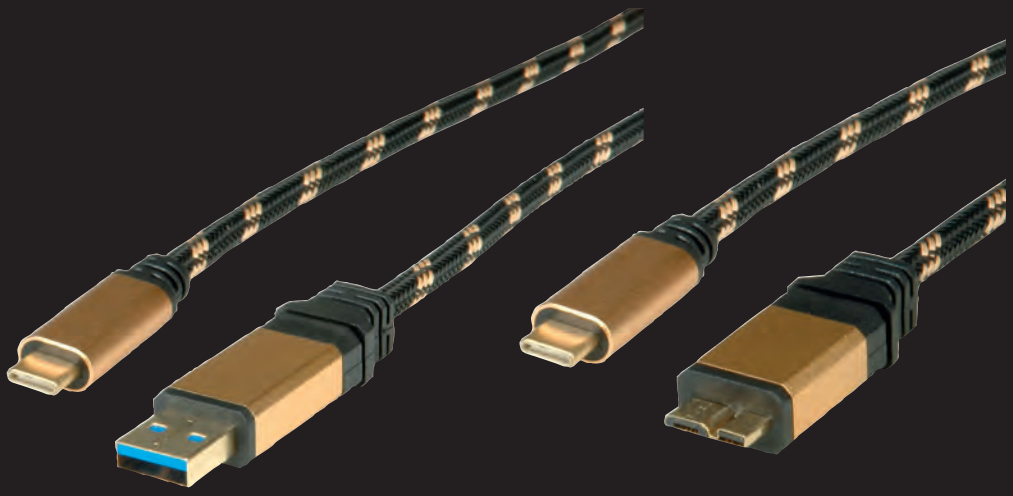

roline® GOLD

ROLINE GOLD USB 3.2 Gen 1 Cables

ROLINE GOLD - Top quality without any compromises!Cables in ROLINE GOLD quality come with high quality shielding and gilded contacts for contact safety even at high plug-in cycles. The plugs are gold coated to enhance their contact durability.
Nylon-reinforced outer material in golden/black provides a better stability and gives the cable a stunning look.

ROLINE GOLD USB 3.0 SuperSpeed Cables

- The plugs are gold coated to enhance their contact durability
- Nylon-reinforced outer material for a better stability
- Supports data transfer rates of up to 5 Gbit/s
- Connectors: USB 3.0 Type A M to Type B M
- Improved data encoding for more efficient data transfer leading to higher through-put and improved I/O power efficiency
- The contact plugs are gold coated to enhance their contact durability
- Compatible with existing USB 3.0 software stacks and device protocols

ROLINE GOLD USB3.2 Gen 1 Cables, A – C and C – MicroB

- Works with both existing 5Gbit/s USB 3.0 hubs and devices, as well as USB 2.0 products
- USB 3.1 high-speed cable in high quality with improved shielding
- Only suitable for USB standard power supply to 5V / 900mA!
- Type: A-C

roline®
Designed for Professionals

Note: According to the current specifications of USB.org we have adapted the technical data of our USB 3 products. The new designation for the already known USB specifications has been changed to USB 3.2 Gen 1 (formerly USB 3.0 / USB 3.1 Gen 1) and USB 3.2 Gen 2 (formerly USB 3.1 / USB 3.1 Gen 2).

	Order-No.	– P.U.
ROLINE GOLD USB3.2 Gen1 Cable, A - B, M/M, 0.8 m	11.02.8900	– 10
ROLINE GOLD USB3.2 Gen1 Cable, A - B, M/M, 1.8 m	11.02.8902	– 10
ROLINE GOLD USB3.2 Gen1 Cable, A - B, M/M, 3 m	11.02.8903	– 10
ROLINE GOLD USB3.2 Gen1 Cable, A - Micro B, M/M, 0.8 m	11.02.8878	– 10
ROLINE GOLD USB3.2 Gen1 Cable, A - Micro B, M/M, 2 m	11.02.8879	– 10
ROLINE GOLD USB3.2 Gen1 Cable, A-C, M/M, 0.5 m	11.02.9012	– 20
ROLINE GOLD USB3.2 Gen1 Cable, A-C, M/M, 1 m	11.02.9013	– 10
ROLINE GOLD USB3.2 Gen1 Cable, C-Micro B, M/M, 0.5 m	11.02.9025	– 20
ROLINE GOLD USB3.2 Gen1 Cable, C-Micro B, M/M, 1 m	11.02.9026	– 10

light





roline® GOLD

ROLINE GOLD DVI and DisplayPort Monitor Cables

ROLINE GOLD - Top quality without any compromises!Cables in ROLINE GOLD quality come with high quality shielding and gilded contacts for contact safety even at high plug-in cycles. The plugs are gold coated to enhance their contact durability.
Nylon-reinforced outer material in golden/black provides a better stability and gives the cable a stunning look.

roline®
Designed for Professionals

ROLINE GOLD DVI Monitor Cables
- DVI-D dual link version with (24+1)-pin assignment, recommended for monitors with bigger screen sizes
- ROLINE Gold cable with gold plated contacts and metal connector housing
- Nylon-reinforced cable outer material for a better stability
- Ferrite cores
- Thumbscrews

ROLINE GOLD DisplayPort Cables
- Cable with DisplayPort male connector on both sides
- Gold plated contacts for enhanced durability
- Nylon-reinforced outer material for a better stability
- **Compliant DP v1.2 / v1.4**

	Order-No.	– P.U.
ROLINE GOLD Monitor Cable, DVI (24+1), Dual Link, M/M, 1 m	11.04.5511	– 10
ROLINE GOLD Monitor Cable, DVI (24+1), Dual Link, M/M, 2 m	11.04.5512	– 10
ROLINE GOLD Monitor Cable, DVI (24+1), Dual Link, M/M, 3 m	11.04.5513	– 10
ROLINE GOLD Monitor Cable, DVI (24+1), Dual Link, M/M, 5 m	11.04.5514	– 10
ROLINE GOLD Monitor Cable, DVI (24+1), Dual Link, M/M, 10 m	11.04.5518	– 5
ROLINE GOLD DisplayPort Cable, DP-DP, M/M, 1 m	11.04.5644	– 10
ROLINE GOLD DisplayPort Cable, DP-DP, M/M, 1.5 m	11.04.5639	– 10
ROLINE GOLD DisplayPort Cable, DP-DP, M/M, 2 m	11.04.5645	– 10
ROLINE GOLD DisplayPort Cable, DP-DP, M/M, 3 m	11.04.5646	– 10
ROLINE GOLD DisplayPort Cable, DP-DP, M/M, 5 m	11.04.5647	– 5
ROLINE GOLD DisplayPort Cable, DP-DP, M/M, 7.5 m	11.04.5648	– 6
ROLINE GOLD DisplayPort Cable, DP-DP, M/M, 10 m	11.04.5649	– 5
ROLINE GOLD DisplayPort Cable, **v1.4**, DP-DP, M/M, 1 m	11.04.5920	– 20
ROLINE GOLD DisplayPort Cable, **v1.4**, DP-DP, M/M, 2 m	11.04.5921	– 10
ROLINE GOLD DisplayPort Cable, **v1.4**, DP-DP, M/M, 3 m	11.04.5922	– 10

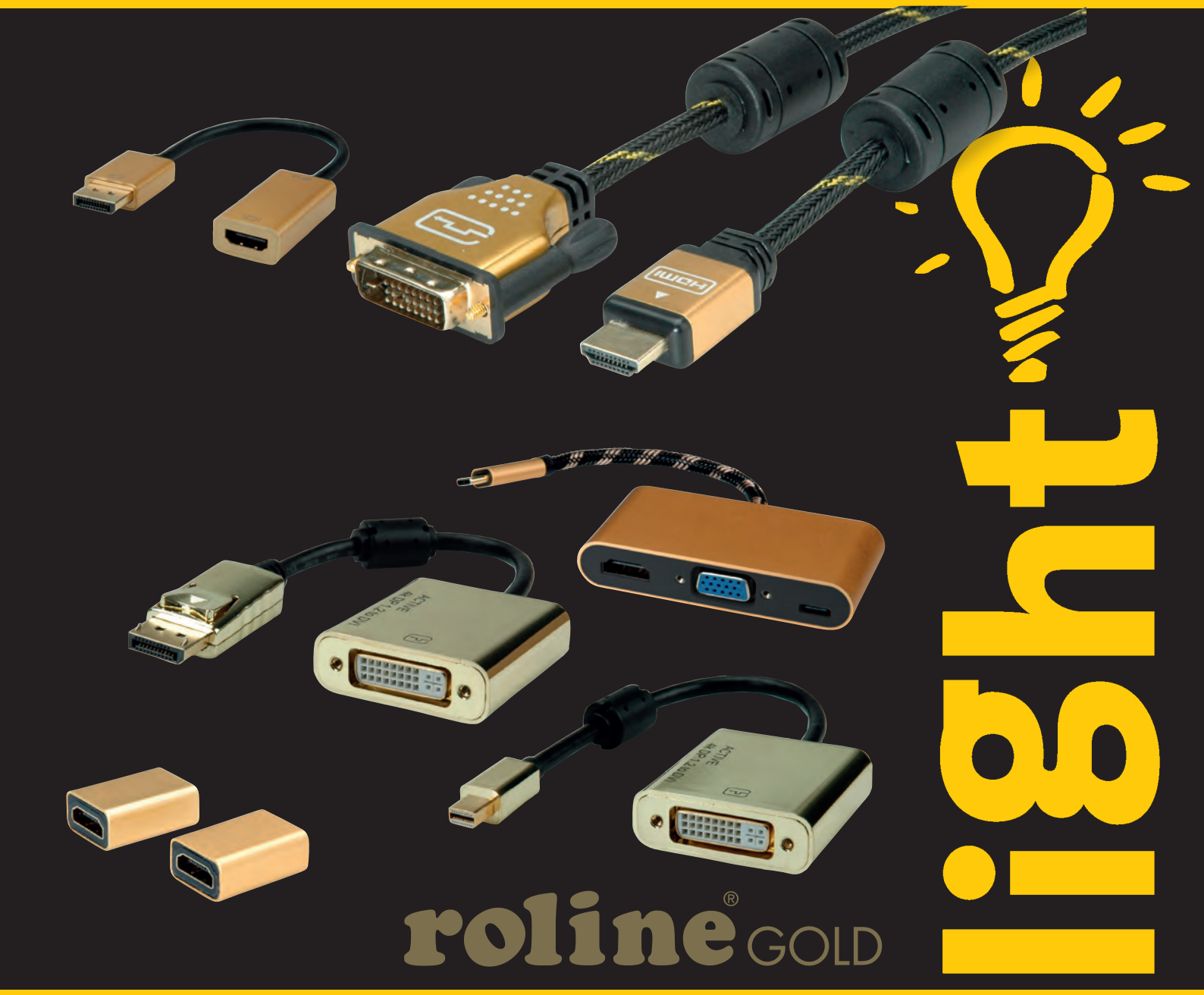

ROLINE GOLD DisplayPort-Adapter and Monitor Cables DVI-HDMI

ROLINE GOLD HDMI to DVI cable for connecting an ultrabook, notebook/laptop or PC to a monitor, TV or projector - for screen transmissions in excellent quality with a resolution of up to 3840x2160 @30Hz!

- The rugged nylon braid protects the cable effectively and makes it look stunning.
- High-quality, double-shielded cable (foil+braid) with gold-plated contacts for optimum transmission of image signals
- Supports 3D video
- HDMI Ethernet channel
- Audio return channel for forwarding signals to the audio/video receiver
- Golden connector housing
- Connectors: DVI-D (24+1) to HDMI

ROLINE GOLD DisplayPort to HDMI cable adapter for connecting a graphics card with DP to a monitor with HDMI connection - with a resolution of up to 3840x2160 @30Hz!

- If you want to connect a graphic card with DisplayPort Female to a monitor by using a HDMI cable, you need this DisplayPort to HDMI adapter
- Connectors: DisplayPort Male, HDMI Female
- DisplayPort version 1.2 allows increased resolutions, higher refresh rates, and greater color depth
- Max. resolution: 3840 x 2160 (@30Hz)
- Active

ROLINE GOLD Mini DisplayPort to VGA cable adapter for connecting a graphics card with Mini DP to a monitor with VGA connector - with a resolution of up to 1920x1080 / 1920x1200 @60Hz!

- Remark: The DisplayPort-HDMI adapter is only working in one direction: the DisplayPort plug has to be connected to the source device (e.g. graphic card)

roline®
Designed for Professionals

	Order-No.	– P.U.
ROLINE GOLD 4K DisplayPort-DVI Adapter, DP M - DVI F	12.03.3175	– 10
ROLINE GOLD 4K Mini DisplayPort-DVI Adapter, MiniDP M - DVI F	12.03.3176	– 10
ROLINE GOLD 4K Adapter, active, v1.2, DP-HDMI, M/F	12.03.3170	– 10
ROLINE GOLD HDMI Adapter, HDMI F - HDMI F	12.03.3153	– 20
ROLINE GOLD HDMI Adapter, HDMI F - HDMI Mini M	12.03.3154	– 20
ROLINE GOLD Type C - VGA / HDMI / Type C PD Adapter, M/F	12.03.3155	– 10
ROLINE GOLD Type C - HDMI/VGA Adapter, M/F	12.03.3165	– 5
ROLINE GOLD Monitor Cable, DVI (24+1) - HDMI, Dual Link, M/M, 1 m	11.04.5890	– 10
ROLINE GOLD Monitor Cable, DVI (24+1) - HDMI, Dual Link, M/M, 1.5 m	11.04.5896	– 10
ROLINE GOLD Monitor Cable, DVI (24+1) - HDMI, Dual Link, M/M, 2 m	11.04.5891	– 10
ROLINE GOLD Monitor Cable, DVI (24+1) - HDMI, Dual Link, M/M, 3 m	11.04.5892	– 10
ROLINE GOLD Monitor Cable, DVI (24+1) - HDMI, Dual Link, M/M, 5 m	11.04.5893	– 10
ROLINE GOLD Monitor Cable, DVI (24+1) - HDMI, Dual Link, M/M, 7.5 m	11.04.5894	– 5
ROLINE GOLD Monitor Cable, DVI (24+1) - HDMI, Dual Link, M/M, 10 m	11.04.5895	– 5

highlight

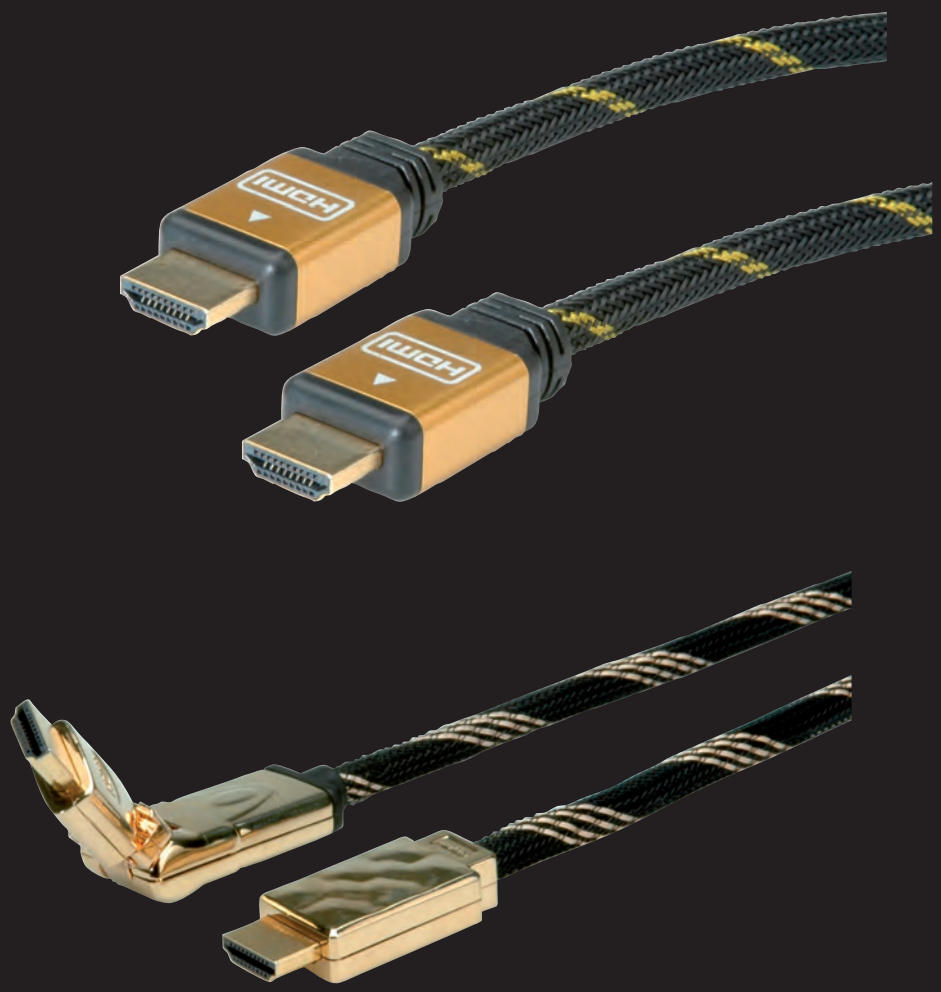

roline® GOLD

ROLINE GOLD HDMI High Speed Cables / with Ethernet

1080p FULL HD

ROLINE GOLD - Top quality without any compromises!Cables in ROLINE GOLD quality come with high quality shielding and gilded contacts for contact safety even at high plug-in cycles. The plugs are gold coated to enhance their contact durability. Nylon-reinforced outer material in golden/black provides a better stability and gives the cable a stunning look.

- Cable with HDMI male connector on both sides
- HDMI Ethernet Channel- Adds high-speed networking to an HDMI link, allowing users to take full advantage of their IP-enabled devices without a separate ethernet cable
- Audio Return Channel- Allows an HDMI-connected TV with a built-in tuner to send audio data „upstream" to a surround audio system, eliminating the need for a separate audio cable
- 3D- Defines input/output protocols for major 3D video formats

- **11.04.5507:** One connector with swivel functionality, so that the cable will not be bent, when there is only small space to the wall

	Order-No.	– P.U.
ROLINE GOLD HDMI High Speed Cable, M/M, 1.0 m	11.04.5561	– 20
ROLINE GOLD HDMI High Speed Cable, M/M, 2.0 m	11.04.5562	– 20
ROLINE GOLD HDMI High Speed Cable, M/M, 3.0 m	11.04.5563	– 20
ROLINE GOLD HDMI High Speed Cable, M/M, 5.0 m	11.04.5565	– 10
ROLINE GOLD HDMI High Speed Cable, M/M, 10.0 m	11.04.5566	– 5
ROLINE GOLD HDMI High Speed Cable, M/M, 15.0 m	11.04.5560	– 5
ROLINE GOLD HDMI High Speed Cable, M/M, 20.0 m	11.04.5564	– 5
ROLINE GOLD HDMI High Speed Cable + Ethernet, M/M, 1.0 m	11.04.5501	– 20
ROLINE GOLD HDMI High Speed Cable + Ethernet, M/M, 1.5 m	11.04.5500	– 20
ROLINE GOLD HDMI High Speed Cable + Ethernet, M/M, 2.0 m	11.04.5502	– 20
ROLINE GOLD HDMI High Speed Cable + Ethernet, M/M, 3.0 m	11.04.5503	– 20
ROLINE GOLD HDMI High Speed Cable + Ethernet, M/M, 5.0 m	11.04.5505	– 10
ROLINE GOLD HDMI High Speed Cable + Ethernet, M/M, 7.5 m	11.04.5504	– 6
ROLINE GOLD HDMI High Speed Cable + Ethernet, M/M, 10.0 m	11.04.5506	– 5
ROLINE GOLD HDMI High Speed Cable + Ethernet, M/M, 15.0 m	11.04.5508	– 5
ROLINE GOLD HDMI High Speed Cable + Ethernet, M/M, 20.0 m	11.04.5510	– 5
ROLINE GOLD HDMI High Speed Cable + Ethernet, 3D-Swivel, 2.0 m	11.04.5507	– 10



light light

ROLINE GOLD HDMI Ultra HD Cables with Ethernet

4K | 3D capable | 2160p UHD-1

ROLINE GOLD - Top quality without any compromises!Cables in ROLINE GOLD quality come with high quality shielding and gilded contacts for contact safety even at high plug-in cycles. The plugs are gold coated to enhance their contact durability.
Nylon-reinforced outer material in golden/black provides a better stability and gives the cable a stunning look.

High-quality HDMI connection cable with HDMI connectors for optimal transmission of digital HDTV signals at data rates up to 18 Gbit/s (600MHz). For the transmission of films in digital cinema-quality, with a resolution of up to 3840x2160 @60Hz!

- HDMI Ethernet Channel- Adds high-speed networking to an HDMI link, allowing users to take full advantage of their IP-enabled devices without a separate ethernet cable
- Audio Return Channel- Allows an HDMI-connected TV with a built-in tuner to send audio data „upstream“ to a surround audio system, eliminating the need for a separate audio cable
- The rugged nylon braid protects the HDMI cable effectively and makes it look stunning.
- 3D- Defines input/output protocols for major 3D video formats
- Cable with HDMI male connector on both sides
- High quality cable with golden metal connector housing and shell for better shielding
- Gold plated contacts for higher durability

	Order-No.	– P.U.
ROLINE GOLD HDMI Ultra HD Cable + Ethernet, M/M, 1 m	11.04.5690	– 10
ROLINE GOLD HDMI Ultra HD Cable + Ethernet, M/M, 1.5 m	11.04.5694	– 10
ROLINE GOLD HDMI Ultra HD Cable + Ethernet, M/M, 2 m	11.04.5691	– 10
ROLINE GOLD HDMI Ultra HD Cable + Ethernet, M/M, 3 m	11.04.5692	– 10
ROLINE GOLD HDMI Ultra HD Cable + Ethernet, M/M, 5 m	11.04.5693	– 10
ROLINE GOLD Type C - HDMI Cable, M/M, 1 m	11.04.5844	– 10
ROLINE GOLD Type C - HDMI Cable, M/M, 2 m	11.04.5847	– 10
ROLINE GOLD Type C - DisplayPort Cable, M/M, 1 m	11.04.5848	– 10
ROLINE GOLD Type C - DisplayPort Cable, M/M, 2 m	11.04.5849	– 10

roline®
Designed for Professionals

VALUE VGA-DVI-HDMI-DP Adapters

12.99.3115
- To connect a DVI cable to an HDMI interface
- Adapter with HDMI plug and 24+1 DVI-D socket

12.99.3116:
- To connect an HDMI cable to a DVI interface
- Adapter with HDMI socket and 24+1 DVI-D plug

12.99.3120/12.99.3152:
- For combining HDMI cable and components with mini HDMI connector
- Adapter with HDMI socket and HDMI mini plug

12.99.3123/12.99.3151:
- For connecting two HDMI cables
- Adapter with HDMI socket and HDMI socket

12.99.3114/12.99.3113:
- For connecting a VGA cable to e.g. a notebook with HDMI socket
- Adapter with VGA socket and HDMI plug

12.99.3135/12.99.3136/12.99.3156:
- For combining VGA cables and components with display port connection
- Adapter with DisplayPort plug and VGA socket

12.99.3133/12.99.3137/12.99.3157:
- For combining DVI cable and components with display port connection
- Adapter with DisplayPort connector and 24+1 DVI-D socket

12.99.3134/12.99.3144/
12.99.3139/12.99.3162/
12.99.3138/12.99.3158:
- For combining HDMI cable and components with display port connection
- Adapter with DisplayPort plug and HDMI socket
- 12.99.3144: Compliant with DP v1.2

Notice:
A DisplayPort to HDMI or DVI connection can only be used in one direction. The DisplayPort connector can only be used on the data source side (e.g. graphics card).









Picture	Order-No. – P.U.	Adapter / Cableadapter	Type	Connector	Length	Version	Active	Passive	Color	Max. nom. Resolution	4K (@30Hz)
A	12.99.3115 – 50	Cableadapter	HDMI – DVI	M/F	0.15	–	–	yes	black	1920 x 1080	–
B	12.99.3116 – 50	Cableadapter	DVI – HDMI	M/F	0.15	–	–	yes	black	1920 x 1080	–
C	12.99.3120 – 25	Cableadapter	HDMI – HDMI Mini	F/M	0.15	–	–	yes	black	1920 x 1080	–
D	12.99.3152 – 20	Adapter	HDMI – HDMI Mini	F/M	–	–	–	yes	black	1920 x 1080	–
E	12.99.3123 – 20	Cableadapter	HDMI – HDMI	F/F	0.15	–	–	yes	black	1920 x 1080	–
F	12.99.3151 – 20	Adapter	HDMI – HDMI	F/F	–	–	–	yes	black	1920 x 1080	–
G	12.99.3114 – 10	Cableadapter	HDMI – VGA	M/F	0.15	–	yes	–	black	1920 x 1080	–
H	12.99.3113 – 10	Adapter	HDMI – VGA	M/F	–	–	yes	–	black	1920 x 1080	–
I	12.99.3135 – 10	Cableadapter	DP – VGA	M/F	0.15	v 1.1	yes	–	black	1920 x 1080	–
I.1	12.99.3136 – 10	Cableadapter	DP – VGA	M/F				yes	black	1920 x 1080	
	12.99.3156 – 10	Adapter	DP – VGA	M/F				yes	black	1920 x 1080	
	12.99.3137 – 10	Cableadapter	DP – DVI	M/F				yes	black	1920 x 1080	
J	12.99.3133 – 10	Cableadapter	DP – DVI	M/F	0.15	v 1.1	–	yes	black	1920 x 1080	–
	12.99.3157 – 10	Adapter	DP – DVI	M/F				yes	black	1920 x 1080	
K	12.99.3138 – 10	Cableadapter	DP – HDMI	M/F				yes	black	1920 x 1080	
	12.99.3158 – 10	Adapter	DP – HDMI	M/F				yes	black	1920 x 1080	
K.1	12.99.3134 – 10	Cableadapter	DP – HDMI	M/F	0.15	v 1.1	–	yes	black	1920 x 1080	–
	12.99.3139 – 10	Cableadapter	DP – HDMI	M/F		v 1.2		yes	black	3840 x 2160	
L	12.99.3144 – 10	Cableadapter	DP – HDMI	M/F	0.15	v 1.2	–	yes	black	3840 x 2160	yes
N	12.99.3162 – 10	Cableadapter	DP – HDMI	M/F		v 1.4		yes	black	3840 x 2160	
O	12.99.3145 – 10	Cableadapter	HDMI – DP	F/M		v 1.2		yes	black	3840 x 2160	
	12.99.3160 – 10	Adapter	DP – Mini DP	M/F		v 1.2		yes	black	3840 x 2160	
P	12.99.3165 – 10	Adapter	DP – DP	F/F		v 1.2		yes	black	3840 x 2160	
Q	12.99.3166 – 20	Adapter	HDMI – HDMI Mini / Micro	F / M & M				yes	black	1920 x 1080	

VALUE VGA-DVI-HDMI-DP Adapters

12.99.3125/12.99.3126:
• Mini DisplayPort - VGA adapter for connecting a VGA M/M cable to a Mini DisplayPort connector of the graphics card
• Adapter with Mini DisplayPort plug and VGA socket

12.99.3128:
• Mini DisplayPort DVI adapter for connecting a DVI M/M cable to a Mini DisplayPort connector of the graphics card
• Adapter with Mini DisplayPort plug and DVI socket

12.99.3129/12.99.3142/ 12.99.3159/12.99.3143/ 12.99.3163:
• Mini DisplayPort HDMI adapter for connecting an HDMI M/M cable to a Mini DisplayPort connector of the graphics card
• Adapter with Mini DisplayPort plug and HDMI socket
- 12.99.3142: Compliant with DP v1.2

12.99.3150:
• The image signal is electronically converted in the adapter.
• Adapter with Mini DisplayPort connector and DP, DVI and HDMI jack.

12.99.3153:
• The image signal is electronically converted in the adapter.
• Maximum resolution: 3840x2160 @60Hz
• Adapter with DisplayPort connector and VGA, DVI and HDMI jack.

12.99.3154:
• The image signal is electronically converted in the adapter.
• Maximum resolution: 3840x2160 @60Hz
• Adapter with Mini DisplayPort connector and DP, DVI and HDMI jack.

Notice:
A DisplayPort to HDMI or DVI connection can only be used in one direction. The DisplayPort connector can only be used on the data source side (e.g. graphics card).



Picture	Order-No. – P.U.	Adapter / Cableadapter	Type	Connector	Length	Version	Active	Passive	Color	Max. nom. Resolution	4K (@30Hz)
A	12.99.3125 – 10	Cableadapter	Mini DP – VGA	M/F	0.15	v 1.1	yes	–	black	1920 x 1080	–
B	12.99.3126 – 10	Cableadapter	Mini DP – VGA	M/F					black	1920 x 1080	
C	12.99.3128 – 10	Cableadapter	Mini DP – DVI	M/F	0.15	v 1.1	–	yes	black	1920 x 1080	–
	12.99.3159 – 10	Adapter	Mini DP – HDMI	M/F					black	1920 x 1080	
D	12.99.3129 – 10	Cableadapter	Mini DP – HDMI	M/F	0.15	v 1.1	–	yes	black	1920 x 1080	–
E	12.99.3143 – 10	Cableadapter	Mini DP – HDMI	M/F	0.15	v 1.2			black	3840 x 2160	yes
F	12.99.3142 – 10	Cableadapter	Mini DP – HDMI	M/F	0.15	v 1.2	–	yes	black	3840 x 2160	yes
G	12.99.3163 – 10	Cableadapter	Mini DP – HDMI*	M/F		v 1.4			black	7680 x 4320	yes
H	12.99.3150 – 20	Cableadapter	Mini DP – HDMI/DP/DVI**	M/F	0.1	v 1.1	yes	–	black	1920 x 1080	–
I	12.99.3153 – 20	Cableadapter	DP – VGA/DVI/HDMI**	M/F		v 1.2	yes		black	3840 x 2160	yes
J	12.99.3154 – 20	Cableadapter	Mini DP – VGA/DVI/HDMI**	M/F		v 1.2	yes		black	3840 x 2160	yes
	12.99.3155 – 10	Cableadapter	Mini DP – VGA/DVI/HDMI**	M/F		v 1.2			white	3840 x 2160	yes
K	12.99.3160 – 10	Adapter	DP – Mini DP	M/F					black	3840 x 2160	
L	12.99.3161 – 10	Adapter	DP – Mini DP	F/M					black	3840 x 2160	

* HDR10 Functionality

** only ONE single output available (DVI or HDMI or DP - 12.99.3150 or VGA/DVI/HDMI - 12.99.3153/12.99.3154/12.99.3155)

ROLINE VGA-DVI-HDMI-DP Adapters

12.03.3105:
• To connect a VGA monitor to a DVI graphics card
• Adapter with HD15-pin socket and DVI-A plug

12.03.3110:
• To connect a DVI monitor to a VGA graphics card
• Adapter with HD15-pin plug and DVI-I socket

12.03.3114/12.03.3117:
• To connect a VGA cable to an HDMI interface
• Adapter with HDMI plug and VGA socket

12.03.3115:
• To connect a DVI cable to an HDMI interface
• Adapter with HDMI plug and 24+1 DVI-D socket

12.03.3116:
• To connect an HDMI cable to a DVI interface
• Adapter with HDMI socket and 24+1 DVI-D plug

12.03.3152:
• For combining HDMI cable and components with mini HDMI connector
• Adapter with HDMI socket and HDMI mini plug

12.03.3151:
- For connecting two HDMI cables
• Adapter with HDMI socket and HDMI socket

12.03.3135/12.03.3146:
• For combining VGA cables and components with display port connection
• Adapter with DisplayPort plug and VGA socket, cable length approx. 10cm

12.03.3133/12.03.3136:
• For combining DVI cable and components with display port connection
• Adapter with DisplayPort connector and 24+1 DVI-D socket

12.03.3134/.3144/.3160/.3162:
• For combining HDMI cable and components with display port connection
• Adapter with DisplayPort plug and HDMI socket

12.03.3125/12.03.3140:
• Mini DisplayPort VGA adapter for connecting a VGA M/M cable to a Mini DisplayPort connector of the graphics card
• Adapter with Mini DisplayPort plug and VGA socket, cable length approx. 10cm

12.03.3128/12.03.3137:
• Mini DisplayPort DVI adapter for connecting a DVI M/M cable to a Mini DisplayPort connector of the graphics card
• Adapter with Mini DisplayPort plug and DVI socket, cable length approx. 10cm

12.03.3129/12.03.3142/12.03.3161:
• Mini DisplayPort HDMI adapter for connecting an HDMI M/M cable to a Mini DisplayPort connector of the graphics card
• Adapter with Mini DisplayPort plug and HDMI socket, cable length approx. 10cm
• 12.03.3161: additional VGA socket

12.03.3130/12.03.3163:
• For connecting a normal DP cable to e.g. a notebook with Mini DP socket
• Adapter with DisplayPort socket and Mini DisplayPort plug

12.03.3132:
• For combining a Mini DP cable to a device with DP socket
• Adapter with DisplayPort connector and Mini DisplayPort socket

Note: A DisplayPort to HDMI or DVI connection can only be used in one direction. The DisplayPort connector can only be used on the data source side (e.g. graphics card).



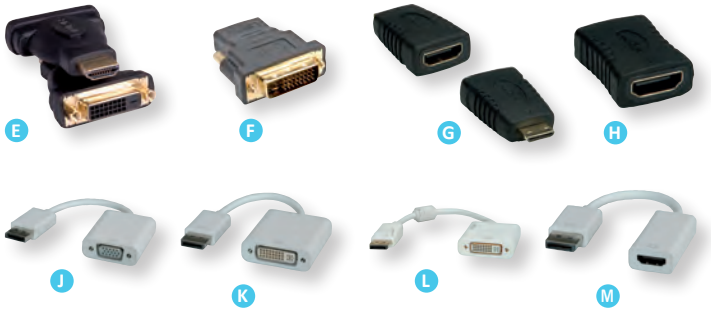

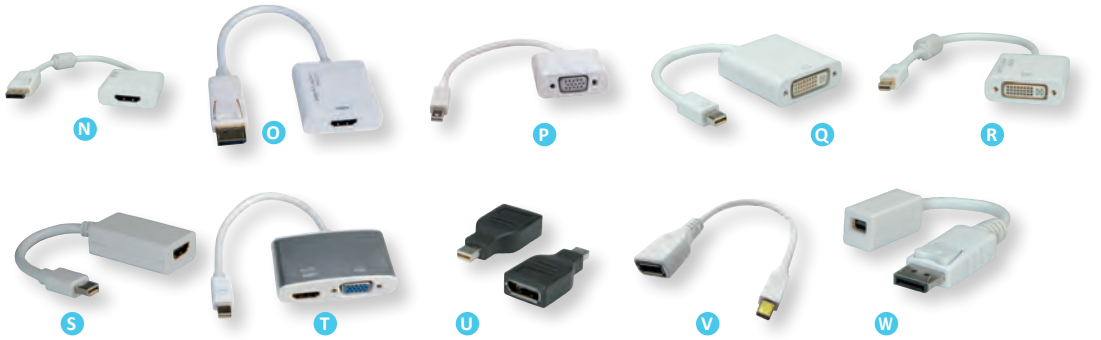

roline®
Designed for Professionals

Picture	Order-No. – P.U.	Adapter / Cableadapter	Type	Connector	Length	Version	Active	Passive	Color	Max. nom. Resolution	4K (@30Hz)
A	12.03.3105 – 50	Adapter	DVI – VGA	M/F	–	–	–	yes	black	1920 x 1080 (*)	–
B	12.03.3110 – 50	Adapter	DVI – VGA	F/M	–	–	–	yes	black	1920 x 1080 (*)	–
C	12.03.3117 – 10	Adapter	HDMI – VGA	M/F	–	–	yes	–	black	1920 x 1080	–
D	12.03.3114 – 10	Cableadapter	HDMI – VGA	M/F	0.15	–	yes	–	white	1920 x 1080	–
E	12.03.3115 – 50	Adapter	HDMI – DVI	M/F	–	–	–	yes	black	1920 x 1080	–
F	12.03.3116 – 50	Adapter	DVI – HDMI	M/F	–	–	–	yes	black	1920 x 1080	–
G	12.03.3152 – 20	Adapter	HDMI – HDMI Mini	F/M	–	–	–	yes	black	1920 x 1080	–
H	12.03.3151 – 20	Adapter	HDMI – HDMI	F/F	–	–	–	yes	black	1920 x 1080	–
J	12.03.3135 – 10	Cableadapter	DP – VGA	M/F	0.15	v 1.1a	yes	–	white	1920 x 1080	–
J	12.03.3146 – 10	Cableadapter	DP – VGA	M/F	0.15	v 1.2	yes	–	white	1920 x 1080	–
K	12.03.3133 – 10	Cableadapter	DP – DVI	M/F	0.1	v 1.1a	–	yes	white	1920 x 1080	–
L	12.03.3136 – 10	Cableadapter	DP – DVI	M/F	0.1	v 1.2	–	yes	white	3840 x 2160	yes
M	12.03.3134 – 10	Cableadapter	DP – HDMI	M/F	0.1	v 1.1a	–	yes	white	1920 x 1080	yes
M	12.03.3144 – 10	Cableadapter	DP – HDMI	M/F	0.15	v 1.2	yes	–	white	3840 x 2160	yes
N	12.03.3162 – 10	Cableadapter	DP – HDMI	M/F	0.1	v 1.2	yes	–	white	3840 x 2160	yes
O	12.03.3160 – 10	Cableadapter	DP – HDMI	M/F	0.1	v 1.2	yes	–	white	3840 x 2160	yes
P	12.03.3125 – 10	Cableadapter	Mini DP – VGA	M/F	0.15	v 1.1a	yes	–	white	1920 x 1080	–
P	12.03.3140 – 10	Cableadapter	Mini DP – VGA	M/F	0.15	v 1.2	yes	–	white	1920 x 1080	–
Q	12.03.3128 – 10	Cableadapter	Mini DP – DVI	M/F	0.1	v 1.1a	–	yes	white	1920 x 1080	–
R	12.03.3137 – 10	Cableadapter	Mini DP – DVI	M/F	0.1	v 1.2	–	yes	white	3840 x 2160	yes
S	12.03.3129 – 10	Cableadapter	Mini DP – HDMI	M/F	0.1	v 1.1a	–	yes	white	1920 x 1080	–
S	12.03.3142 – 10	Cableadapter	Mini DP – HDMI	M/F	0.15	v 1.2	yes	–	white	3840 x 2160	yes
T	12.03.3161 – 5	Cableadapter	Mini DP – HDMI/VGA**	M/F	0.1	v 1.2	yes	–	silver	3840 x 2160	yes
U	12.03.3130 – 20	Adapter	Mini DP – DP	M/F	–	v 1.2	–	yes	black	3840 x 2160	yes
V	12.03.3163 – 10	Cableadapter	DP – Mini DP	F/M	0.1	v 1.2			white	3840 x 2160	yes
W	12.03.3132 – 20	Cableadapter	DP – Mini DP	M/F	0.1	v 1.2	–	yes	white	3840 x 2160	yes

* depends on graphic card / ** only ONE single output available (DVI or HDMI or DP - 12.99.3150) / (HDMI or VGA - 12.03.3161)

VALUE Display Adapter, USB 3.1 Type C to VGA / DVI / HDMI / DisplayPort

Connect one or more monitors to your tablet - such as a MacBook - with a USB type C port, or Projectors on.

These display adapters are available for VGA, DVI, HDMI and (Mini-)DisplayPort.
- No software is required; simply connect - ready!
- Portable, compact design
- No power supply required
- Cable length: approx. 10 cm


A

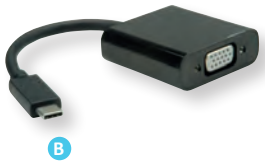
B


C


D


E


F


G




H


I


J


K


L


M


N

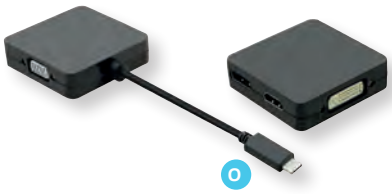
O

Brand	Description / Connection Type	Video-Connection	USB3.1 PD Connection	Other Connections	Max. Resolution	Picture	Order-No. – P.U.
	USB 3.1 Display Adapter Type						
VALUE	C - VGA	1x HD15 F	-		2048 x 1536@50Hz	A	12.99.3200 – 10
VALUE	C - VGA + Audio	1x HD15 F	-	1x 3.5mm F	1920 x 1080@60Hz	B	12.99.3203 – 10
VALUE	C - VGA + USB3.0 A + Typ C (PD)	1x HD15 F	yes	1x USB3.0 A F	2048 x 1536@50Hz	C	12.99.3201 – 10
VALUE	C - HDMI	1x HDMI F	-		3840 x 2160@30Hz	D	12.99.3210 – 10
VALUE	C - 2x HDMI	2x HDMI F			3840 x 2160@30Hz	E	12.99.1132 – 10
VALUE	C - HDMI 4K	1x HDMI F	-		3840 x 2160@60Hz	F	12.99.3211 – 10
VALUE	C - VGA + HDMI	1x HDMI F	-	1x HD15 F	HDMI: 3840 x 2160@30Hz VGA: 1920 x 1080@60Hz (2 output using at the same time: 1920 x 1080@60Hz)	G	12.99.3215 – 10
VALUE	C - HDMI + 2x USB 3.0 A + PD	1x HDMI F	yes	2x USB3.0 A F	3840 x 2160@30Hz	H	12.99.1133 – 10
VALUE	C - HDMI + USB 3.0 A + PD	1x HDMI F	yes	1x USB3.0 A F	3840 x 2160@30Hz	I	12.99.1131 – 10
VALUE	C - DisplayPort v1.2	1x DP F, v1.2	-		3840 x 2160@60Hz	J	12.99.3220 – 10
VALUE	C - Mini DisplayPort v1.2, white	1x Mini DP F, v1.2	-		3840 x 2160@60Hz	K	12.99.3225 – 10
VALUE	C - Mini DisplayPort v1.2, black	1x Mini DP F, v1.2	-		3840 x 2160@60Hz	L	12.99.3226 – 10
VALUE	C - VGA + HDMI + DVI	1x HDMI F	-	1x HD15 F + DVI-D F	3840 x 2160@60Hz	M	12.99.3229 – 10
VALUE	C - VGA + HDMI + DVI + DP	1x HDMI F	-	1x HD15 F + DVI-D F + DP F	3840 x 2160@60Hz	N	12.99.3230 – 5
VALUE	C - VGA + HDMI + DVI + DP	1x HDMI F	-	1x HD15 F + DVI-D F + DP F	3840 x 2160@60Hz	O	12.99.3231 – 5

ROLINE Display Adapter, USB 3.1 Type C to VGA / DVI / HDMI / DisplayPort

Connect one or more monitors or projectors to your tablet - such as a MacBook - with a USB Type C port. These display adapters are available for VGA, DVI, HDMI and (Mini-)DisplayPort.

- No software is required; simply connect ready!
- Portable, compact design
- No power supply required
- Cable length: approx. 10 cm

• Only for 12.03.3201, 12.02.1130 and 12.02.1134: The tablet can be charged via USB 3.1 Power Delivery (PD) in parallel to video operation



roline®
Designed for Professionals

Brand	Description / Connection Type	Video-Connection	USB3.1 PD Connection	Other Connections	Max. Resolution	Picture	Order-No. – P.U.
	USB 3.1 Display Adapter Type						
ROLINE	C - VGA	1x HD15 F	-	-	1920 x 1080@60Hz	A	12.03.3200 – 10
ROLINE	C - DVI	1x DVI-I F	-	-	3840 x 2160@30Hz	B	12.03.3205 – 10
ROLINE	C - DVI + USB3.0 Typ A + PD	1x DVI-I F	yes	1x USB3.1 Gen1 A F	1920 x 1080@60Hz	C	12.02.1130 – 10
ROLINE	C - HDMI	1x HDMI F	-	-	3840 x 2160@60Hz	D	12.03.3210 – 10
ROLINE	C - HDMI + USB3.0 Typ A + PD	1x HDMI F	yes	3x USB3.1 Gen1 A F	3840 x 2160@30Hz	E	12.02.1134 – 10
ROLINE	C - HDMI + PD	1x HDMI F	yes	-	3840 x 2160@60Hz	F	12.03.3211 – 10
ROLINE	C - DisplayPort v1.2	1x DP F, v1.2	-	-	3840 x 2160@60Hz	G	12.03.3220 – 10
ROLINE	C - Mini-DisplayPort v1.2	1x Mini DP F, v1.2	-	-	3840 x 2160@60Hz	H	12.03.3225 – 10
ROLINE	C - DisplayPort v1.2 + PD	1x DP F, v1.2	yes	-	3840 x 2160@60Hz	I	12.03.3221 – 10
ROLINE	C - VGA + HDMI	1x HD15 + HDMI F	-	-	HDMI: 3480 x 2160@30Hz VGA: 1920 x 1080@60Hz	J	12.03.3215 – 5
ROLINE	C - VGA + HDMI + DP	1x HD15 + HDMI + DP F	-	-	3840 x 2160@60Hz	K	12.03.3230 – 8
ROLINE	C - VGA + HDMI + DP	1x HD15 + HDMI + DP F	-	-	3840 x 2160@60Hz	L	12.03.3138 – 20

VALUE Cableadapter, VGA+Audio - HDMI, M/F

- Easy and simple solution to connect media and display devices
- Ideal for projectors, presentations or any other audio/visual project (e.g. multimedia presentation) you may have
- Allows the upscaling of analog VGA signals to digital HDMI signals, ideal for connecting PCs and laptops to HDMI displays such as HDTVs
- Supports both video and audio, 1080p resolution
- The converter takes audio from the computer via 3.5mm connector and embeds it to the HDMI output along with the video
- The cableadapter features a MicroB USB port for an connection to a USB power source (connection is required)
- VGA cable adapter: 0.15m Audio cable length: 0.5m USB cable length: 1m
- Maximum resolution: 1920 x 1080
- Color: black



	Order-No. – P.U.
VALUE Cableadapter, VGA+Audio - HDMI, M/F, 0.15 m	12.99.3117 – 10

VALUE Cableadapter, HDMI - VGA+Audio, M/F, (Stereo)

Use modern notebooks with HDMI output on display units which have a VGA input!

- Easy and simple solution to connect media and display devices
- Ideal for projectors, presentations or any other audio/visual project (e.g. multimedia presentation) you may have
- Supports both video and audio, 1080p resolution
- The audio signal from the HDMI source is transmitted to the audio input using a 3.5mm plug
- The cableadapter features a MicroB USB port for an connection to a USB power source (connection is required)
- Maximum resolution: 1920 x 1080 (1080p)
- Color: silver/black
- Length: 0.15m (HDMI)

Note: this adapter works only in one direction from HDMI to VGA



	Order-No. – P.U.
VALUE Cableadapter, HDMI - VGA+Audio, M/F, (Stereo)	12.99.3119 – 10

ROLINE DisplayPort-HDMI Adapter, 4K@60Hz, DP v1.4, DP M - HDMI F

4K

For connecting an HDMI cable to a DisplayPort socket with a resolution of up to 3840x2160 @60Hz and HDR 10 support!

- If you want to connect a graphic card with DisplayPort Female to a monitor by using a HDMI cable, you need this DisplayPort to HDMI adapter
- Connectors: DisplayPort Male, HDMI Female
- DisplayPort Version 1.4 allows increased resolutions, higher refresh rates, and greater color depth
- Support HRD10 (High Dynamic Range 10 static)

- Remark: The DisplayPort-HDMI adapter is only working in one direction: the Display-Port plug has to be connected to the source device (e.g. graphic card)





roline®
Designed for Professionals

	Order-No. – P.U.
ROLINE DisplayPort-HDMI Adapter, 4K@60Hz, DP v1.4, DP M - HDMI F	12.03.3164 – 10

ROLINE GOLD DisplayPort Adapter, 4K, Active, v1.2, DP-HDMI

4K

DisplayPort to HDMI adapter for connecting a graphics card with DP to a monitor with HDMI connection - with a resolution of up to 3840x2160 @60Hz!

- DisplayPort to HDMI Plug Adapter to connect an HDMI cable to a DisplayPort socket of the graphics card
- Active adapter with DisplayPort connector and HDMI socket
- DisplayPort v1.2 with resolutions up to 3840x2160 @60Hz
- Golden aluminium housing, golden plug and socket
- Note: The DisplayPort HDMI adapter only works in one direction: the DisplayPort connector can only be used on the data source side (e.g. graphics card)

What are the benefits of using Active adapters and converters?Active products can have a huge advantage when working with long cable runs and video conversion applications. In terms of video converters, active units generally have hardware inside to improve your image.





roline®
Designed for Professionals

	Order-No. – P.U.
ROLINE GOLD DisplayPort Adapter, 4K, Active, v1.2, DP-HDMI, M/F	12.03.3158 – 20

ROLINE Type C - HDMI Adapter, M/F

Connect a TV, monitor or projector via HDMI to your MacBook, Ultrabook, notebook/laptop, PC or mobile device with USB Type C connection - at resolutions up to 3840x2160 @30Hz!

- USB 3.1 / USB 3.2 Gen 2 Type C to HDMI adapter
- To mirror or expand your screen to a TV, monitor or beamer/projector
- Maximum resolution: 3840x2160 @30Hz
- Plug-in adapter with minimal form factor and solid aluminium housing in grey
- No additional power supply required
- Connections: HDMI socket and USB type C connector
- Contents:adapter

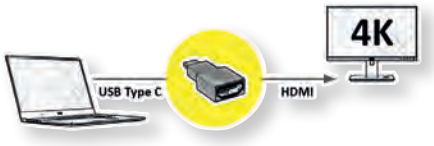



	Order-No. – P.U.
ROLINE Type C - HDMI Adapter, M/F, grey	12.03.3224 – 20

roline®
Designed for Professionals

ROLINE Type C - HDMI / DisplayPort / VGA Adapter, M/F

Connect a TV, monitor or projector via HDMI / DP / VGA to your MacBook, Ultrabook, notebook/laptop, PC or mobile device with USB Type C connection (such as an Android phone or Apple iPad Pro) - with resolutions of up to 3840x2160 @60Hz!

- USB 3.1 / USB 3.2 Gen 2 Type C to HDMI adapter
- To mirror or expand your screen to a TV, monitor or beamer/projector
- Maximum resolution: up to 3840x2160 @60Hz (HDMI/ DP) 1920x1080 (VGA)
- Plug-in adapter with minimal form factor and solid aluminium housing
- No additional power supply required
- Connections: HDMI socket and USB type C connector
- Contents: adapter

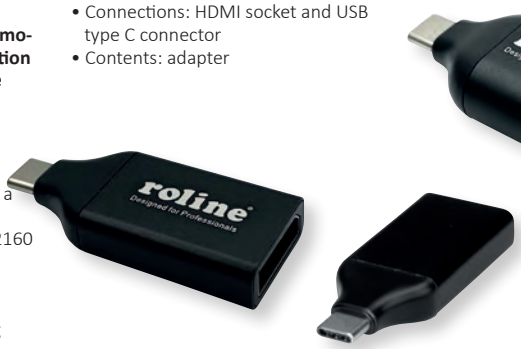

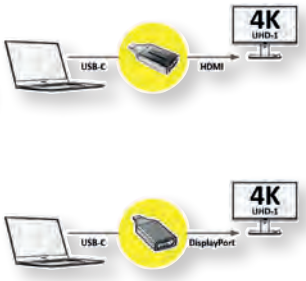

	Order-No. – P.U.
ROLINE Type C - HDMI Adapter, M/F	12.03.3226 – 10
ROLINE Type C - DisplayPort Adapter, v1.2, M/F	12.03.3227 – 10
ROLINE Type C - VGA Adapter, M/F	12.03.3228 – 10

roline®
Designed for Professionals

ROLINE GOLD Type C - HDMI / DisplayPort / VGA Adapter, M/F

Connect a TV, monitor or projector via HDMI / DisplayPort or VGA to your MacBook, Ultrabook, notebook/laptop, PC or mobile device with USB Type C connection (such as an Android phone or Apple iPad Pro) - with resolutions of up to 3840x2160 @60Hz!

- USB 3.1 / USB 3.2 Gen 2 Type C to HDMI /DisplayPort /VGA adapter
- To mirror or expand your screen to a TV, monitor or beamer/projector
- Maximum resolution: up to 3840x2160 @60Hz (HDMI/ DP) 1920x1080 (VGA)
- Plug-in adapter with minimal form factor and solid aluminium housing
- No additional power supply required
- Connections: HDMI / DisplayPort / VGA socket and USB type C connector
- Contents: adapter



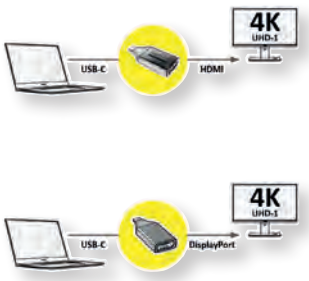

	Order-No. – P.U.
ROLINE GOLD Type C - HDMI Adapter, M/F	12.03.3231 – 10
ROLINE GOLD Type C - DisplayPort Adapter, v1.2, M/F	12.03.3232 – 10
ROLINE GOLD Type C - VGA Adapter, M/F	12.03.3233 – 10

roline®
Designed for Professionals

VALUE Cables Type C - VGA, DVI, HDMI, DisplayPort

• USB 3.1 Cable Type C to VGA/DVI/HDMI/DisplayPort for Macbook
• Connect your MacBook with USB-C port to any corespondent display or projector
• This adapter allows you to mirror your MacBook display to your TV or display
• No power adapter required
• Supports maximum resolutions up to 1920 x 1080 @60Hz (Full HD 1080p) – Type C- VGA
• Supports maximum resolutions up to 3840x2160 @ 30Hz- Type C- DVI
• Supports maximum resolutions up to 3840x2160 @ 60Hz- Type C- HDMI/DP

• Connectors: VGA Male and Type C Male (11.99.5820/11.99.5821/11.99.5822)
• Connectors: DVI Male and Type C Male (11.99.5830/11.99.5831)
• Connectors: HDMI Male and Type C Male (11.99.5840/11.99.5841)
• Connectors: DisplayPort Male and Type C Male (11.99.5845/11.99.5846)
• DisplayPort Version 1.2 allows increased resolutions, higher refresh rates, and greater color depth



	Order-No. – P.U.
VALUE USB Type C - VGA Cable, M/M, 1 m	11.99.5820 – 10
VALUE USB Type C - VGA Cable, M/M, 2 m	11.99.5821 – 10
VALUE USB Type C - VGA Cable, M/M, 3 m	11.99.5822 – 10

	Order-No. – P.U.
VALUE USB Type C - DVI Cable, M/M, 1 m	11.99.5831 – 10
VALUE USB Type C - DVI Cable, M/M, 2 m	11.99.5832 – 10

	Order-No. – P.U.
VALUE Type C - HDMI Cable, M/M, 1 m	11.99.5840 – 10
VALUE Type C - HDMI Cable, M/M, 2 m	11.99.5841 – 10

	Order-No. – P.U.
VALUE Type C - DisplayPort Cable, M/M, 1 m	11.99.5845 – 10
VALUE Type C - DisplayPort Cable, M/M, 2 m	11.99.5846 – 10

ROLINE Cables Type C - VGA, DVI, HDMI, DisplayPort

• USB 3.1 Cable Type C to VGA/DVI/HDMI/DisplayPort for Macbook
• Connect your MacBook with USB-C port to any corespondent display or projector
• This adapter allows you to mirror your MacBook display to your TV or display
• No power adapter required
• Supports maximum resolutions up to 1920 x 1080 @60Hz (Full HD 1080p) – Type C- VGA
• Supports maximum resolutions up to 3840x2160 @ 30Hz- Type C- DVI
• Supports maximum resolutions up to 3840x2160 @ 60Hz- Type C- HDMI/DP

• Connectors: VGA Male and Type C Male (11.04.5820/11.04.5821/11.04.5822)
• Connectors: DVI Male and Type C Male (11.04.5830/11.04.5831)
• Connectors: HDMI Male and Type C Male (11.04.5840/11.04.5841)
• Connectors: DisplayPort Male and Type C Male (11.04.5845/11.04.5846)
• DisplayPort Version 1.2 allows increased resolutions, higher refresh rates, and greater color depth



	Order-No. – P.U.
ROLINE USB Type C - VGA Cable, M/M, 1 m	11.04.5820 – 10
ROLINE USB Type C - VGA Cable, M/M, 2 m	11.04.5821 – 10
ROLINE USB Type C - VGA Cable, M/M, 3 m	11.04.5822 – 10

	Order-No. – P.U.
ROLINE USB Type C - DVI Cable, M/M, 1 m	11.04.5830 – 10
ROLINE USB Type C - DVI Cable, M/M, 2 m	11.04.5831 – 10

	Order-No. – P.U.
ROLINE Type C - HDMI Cable, M/M, 1 m	11.04.5840 – 10
ROLINE Type C - HDMI Cable, M/M, 2 m	11.04.5841 – 10
ROLINE Type C - HDMI Cable, M/M, 3 m	11.04.5842 – 10
ROLINE Type C - HDMI Cable, M/M, 5 m	11.04.5843 – 10

	Order-No. – P.U.
ROLINE Type C - DisplayPort Cable, M/M, 1 m	11.04.5845 – 10
ROLINE Type C - DisplayPort Cable, M/M, 2 m	11.04.5846 – 10

ROLINE Cable Type C - DisplayPort, v1.4, 8K

NEW 8K

Connect your Macbook, Ultrabook, Notebook/Laptop or PC with USB Type C connector to a DisplayPort monitor or projector with DP - with a maximum resolution of 7680 x 4320 @ 60Hz!

• USB 3.1 Type C to DisplayPort cable for Macbook, Ultrabook, Notebook/Laptop or PC
• This adapter allows you to mirror or extend the display of your device to any DisplayPort enabled monitor or projector
• Portable design
• No power adapter required
• Connectors: DisplayPort Female and Type C Male
• Cable length: 1 m

• Max. resolution: 7680 x 4320 @ 60Hz
• DisplayPort Version 1.4 allows increased resolutions, higher refresh rates, and greater color depth
• Compliant DP v1.4 (max. 7680 x 4320 @60Hz)



	Order-No. – P.U.
ROLINE Type C - DisplayPort Cable, v1.4, M/M, 1 m	11.04.5835 – 10
ROLINE Type C - DisplayPort Cable, v1.4, M/M, 2 m	11.04.5836 – 10
ROLINE Type C - DisplayPort Cable, v1.4, M/M, 3 m	11.04.5837 – 10

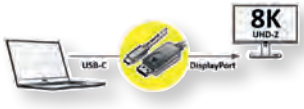

ROLINE Type C - HDMI + USB C (PD) / USB A Cables

4K 2160p UHD-1

This adapter cable enables you to mirror or expand the display of your device with USB Type C connection to a HDMI capable monitor, TV or projector - with a maximum resolution of 3840x2160 @60Hz! The additional USB Type C PD cable also provides the optimal power supply for your device.

- USB 3.1 Type C to HDMI cable adapter for Macbook, Ultrabook, Notebook/Laptop or PC
- Mirror or expand your screen to another display device
- Connections: USB type C or USB A and HDMI connector for connecting source and display; USB type C PD socket or USB A for connecting a power supply
- Maximum resolution: 3840x2160 @60Hz

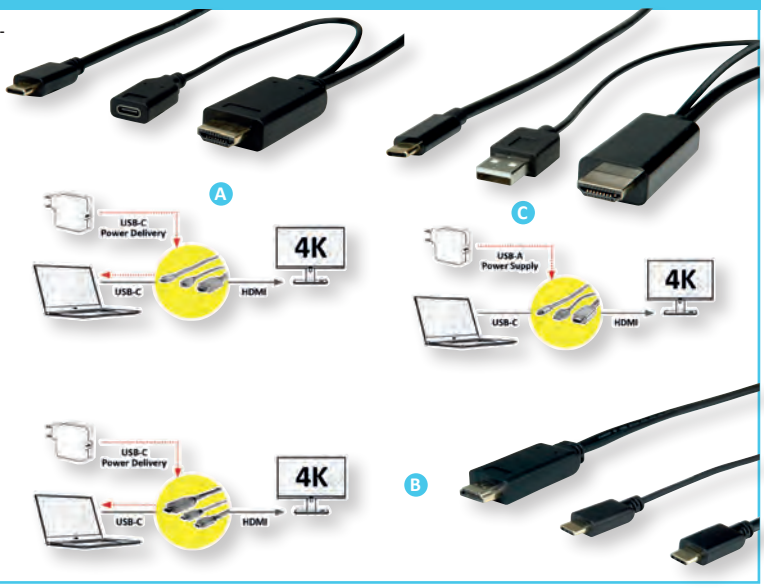

roline® Designed for Professionals

		Order-No.	– P.U.
ROLINE Type C - HDMI + USB C (PD) Cable, M/M, 1 m	A	11.04.5950	– 10
ROLINE Type C - HDMI + USB C (PD) Cable, M/M, 2 m	A	11.04.5951	– 10
ROLINE Type C - HDMI + USB C Cable, M/M, 1 m	B	11.04.5952	– 10
ROLINE Type C - HDMI + USB C Cable, M/M, 2 m	B	11.04.5953	– 10
ROLINE Type C - HDMI + USB A Cable, M/M, 1 m	C	11.04.5955	– 10
ROLINE Type C - HDMI + USB A Cable, M/M, 2 m	C	11.04.5956	– 10

ROLINE Type C - HDMI Adapter, M/F

4K 2160p ULTRA HD

Connect a monitor or projector with HDMI interface to your MacBook, Ultrabook, notebook/laptop or PC with USB Type C port - with a maximum resolution of up to 3840x2160 @60Hz; The flat silicone cable provides maximum flexibility!

- USB 3.1 Type C to HDMI Cableadapter
- Connect your device with USB-C port to any HDMI display or projector
- This adapter allows you to mirror or extend your display to any HDMI-enabled TV or display
- Portable design
- No power adapter required
- Connectors: HDMI Female and Type C Male
- Cable length: ca. 13 cm



roline® Designed for Professionals

	Order-No.	– P.U.
ROLINE Type C - HDMI Adapter, M/F, 0.13 m	12.03.3212	– 10

ROLINE Type C - 3.5mm Audio Adapter, M/M

First choice for your Type C USB devices that don't have a 3.5mm jack, such as MacBooks, Ultrabooks, smartphones, and tablets - this cable helps you to connect these devices to headphones, headsets, and Hi-Fi systems!

- The adapter cable converts the USB Type C into a 3.5mm stereo plug.
- Reversible design for the USB Type C connector
- Stable signal transmission for clear sound and voice quality
- Portable for mobile use
- Dark grey aluminium connector housing combined with a black cotton braid around the cable
- Connector: 3.5mm plug and Type C plug



roline® Designed for Professionals

	Order-No.	– P.U.
ROLINE Type C - 3.5mm Audio Adapter, M/M, 0.8 m	12.03.3216	– 20
ROLINE Type C - 3.5mm Audio Adapter, M/M, 1.8 m	12.03.3217	– 20
ROLINE Type C - 3.5mm Audio Adapter, M/M, 3 m	12.03.3218	– 10

VALUE Type C - 2x 3.5mm Audio Adapter, M/F

First choice for your Type C USB devices that don't have a 3.5mm jack, such as MacBooks or Ultrabooks, as well as smartphones and tablets.

- The adapter cable converts the USB Type C into two 3.5mm audio jacks, one each for microphone and headphones.
- Reversible design for the USB Type C connector
- Stable signal transmission
- Portable for mobile use
- Color-coded jacks with headphone/microphone icons
- Connectors: 2x 3.5mm sockets and 1x type C connector
- Cable length: approx. 13 cm



	Order-No. – P.U.
VALUE Type C - 2x 3.5mm Audio Adapter, M/F, 0.15 m	12.99.3213 – 10

ROLINE Type C - 2x 3.5mm Audio Adapter, M/F

First choice for your Type C USB devices that don't have a 3.5mm jack, such as MacBooks or Ultrabooks, as well as smartphones and tablets.

- The adapter cable converts the USB Type C into two 3.5mm audio jacks, one each for microphone and headphones.
- Reversible design for the USB Type C connector
- Stable signal transmission
- Narrow plastic housing for mobile applications
- Color-coded jacks with headphone/microphone icons
- Connectors: 2x 3.5mm sockets and 1x type C connector
- Cable length: approx. 13 cm



roline®
Designed for Professionals

	Order-No. – P.U.
ROLINE Type C - 2x 3.5mm Audio Adapter, M/F, 0.15 m	12.03.3209 – 20

ROLINE USB Type C - 1x 3.5mm Audio + 1x Type C (PD), M/F

First choice for your USB Type C devices that aren't equipped with a 3.5mm jack, like MacBooks or other Ultrabooks, as well as Smartphones and Tablets.

- The adapter cable allows the connection of a headset or headphones with 3.5mm stereo plug and offers an additional USB Type C port for parallel charging of your terminal device
- Reversible design for the USB Type C connector
- Stable signal transmission
- Flexible, durable cable, perfectly suited for mobile use
- Connectors: 1x 3.5mm stereo jack and 1x USB type C connector
- Power delivery function (for charging devices via the additional type C connector)
- Cable length: approx. 13 cm



roline®
Designed for Professionals

	Order-No. – P.U.
ROLINE USB Type C - 1x 3.5mm Audio + 1x Type C (PD), M/F, 0.13 m	12.03.3222 – 10

ROLINE USB Type 8 Pin - 3.5mm Audio Adapter, M/F

First choice for your iPads/iPhones with Lightning jack, which are not equipped with a 3.5mm audio connector - to make calls/conferences or simply listen to music.

- The adapter cable converts the Lightning socket of your iPhone/iPad into a 3.5mm audio socket.
- Reversible design for the Lightning connector
- Stable signal transmission
- Flexible, durable cable, perfectly suited for mobile use
- Connector: 3,5mm socket and Lightning plug
- Cable length: approx. 13 cm



roline®
Designed for Professionals

	Order-No. – P.U.
ROLINE USB Type 8 Pin - 3.5mm Audio Adapter, M/F, 0.13 m	12.03.3214 – 10

VALUE / ROLINE / ROLINE GOLD USB Type C - 3.5mm Audio Adapter, M/F

First choice for your USB Type C devices that aren't equipped with a 3.5mm jack, like MacBooks or other Ultrabooks, as well as Smartphones and Tablets.

- The adapter cable converts USB Type C to 3.5mm Audio jack
- Reversible design for the USB Type C connector
- Stable signal transmission
- Portable design
- Connectors: 3.5mm Female and Type C Male
- Cable length: ca. 13 cm





	Order-No. – P.U.
VALUE Adapter USB Typ C - 3,5mm Audio, ST/BU, 0,13 m	12.99.3214 – 10
ROLINE Adapter USB Typ C - 3,5mm Audio, 0,13 m	12.03.3213 – 10
ROLINE GOLD Adapter USB Typ C - 3,5mm Audio, ST/BU, 0,13 m	12.03.3223 – 10

ROLINE GOLD Audio / Video Cables

- The plugs are gold coated to enhance their contact durability
- Nylon-reinforced outer material for a better stability
- Color: Black / Gold



Audio- / Video Cables	Length	Order-No. – P.U.
Cinch Cable (Picture A)		
ROLINE GOLD Cinch Cable simplex M / M, red	2.5m	11.09.4231 – 10
ROLINE GOLD Cinch Cable simplex M / M, white	2.5m	11.09.4232 – 10
ROLINE GOLD Cinch Cable simplex M / M, yellow	2.5m	11.09.4233 – 10
ROLINE GOLD Cinch Cable simplex M / M, red	5.0m	11.09.4251 – 5
ROLINE GOLD Cinch Cable simplex M / M, white	5.0m	11.09.4252 – 5
ROLINE GOLD Cinch Cable simplex M / M, white	5.0m	11.09.4253 – 5
3.5mm-to-Cinch Cable (Picture B)		
ROLINE GOLD Audio Cable 3.5mm Stereo – 2x Cinch (RCA), M / M	2.5m	11.09.4273 – 10
ROLINE GOLD Audio Cable 3.5mm Stereo – 2x Cinch (RCA), M / M	5.0m	11.09.4276 – 5
ROLINE GOLD Audio Cable 3.5mm Stereo – 2x Cinch (RCA), M / M	10m	11.09.4279 – 5
3.5mm Cable (Picture C)		
ROLINE GOLD 3.5mm Audio Cable M / M	2.5m	11.09.4283 – 10
ROLINE GOLD 3.5mm Audio Cable M / M	5.0m	11.09.4285 – 5
ROLINE GOLD 3.5mm Audio Cable M / M	10m	11.09.4289 – 5
3.5mm Extension Cable (Picture D)		
ROLINE GOLD 3.5mm Audio-Extension Cable M / F	2.5m	11.09.4753 – 10
ROLINE GOLD 3.5mm Audio-Extension Cable M / F	5.0m	11.09.4755 – 5
ROLINE GOLD 3.5mm Audio-Extension Cable M / F	10m	11.09.4759 – 5
3.5mm Adapter		
ROLINE GOLD Stereo Adapter 6.35 mm M – 3.5 mm F (Picture E)		11.09.4211 – 10
ROLINE GOLD Stereo Adapter 3.5 mm M – 6.35 mm F (Picture F)		11.09.4212 – 10
ROLINE GOLD 3.5mm Adaptercable (1x M, 2x F) (Picture G)	0.2m	11.09.4213 – 10

VALUE / ROLINE Audio / Video Cables

- Area of application: multimedia, home theater and hi-fi systems (connection between DVD players or game consoles equipped with a Dolby Digital / dts decoder ...)

















Audio / Video Cable	Length	Order-No. – P.U.
AV-Fiber Cable (Picture A)		
VALUE Fiber Cable Toslink M-M	1.0 m	11.99.4381 – 50
VALUE Fiber Cable Toslink M-M	2.0 m	11.99.4382 – 30
VALUE Fiber Cable Toslink M-M	3.0 m	11.99.4383 – 20
VALUE Fiber Cable Toslink M-M	5.0 m	11.99.4385 – 10
VALUE Fiber Cable Toslink M-M	10.0 m	11.99.4389 – 5
ROLINE Fiber Cable Toslink M-M	1.0 m	11.09.4381 – 50
ROLINE Fiber Cable Toslink M-M	2.0 m	11.09.4382 – 30
ROLINE Fiber Cable Toslink M-M	3.0 m	11.09.4383 – 20
ROLINE Fiber Cable Toslink M-M	5.0 m	11.09.4385 – 10
Cinch Cable (Picture B)		
VALUE Cinch Cable simplex M-F	5.0 m	11.99.4325 – 30
VALUE Cinch Cable simplex M-F	10.0 m	11.99.4329 – 20
VALUE Cinch Cable duplex M-F	5.0 m	11.99.4326 – 20
VALUE Cinch Cable duplex M-F	10.0 m	11.99.4330 – 15
Cinch Cable (Picture C)		
VALUE Cinch Cable simplex M-M	2.5 m	11.99.4332 – 50
VALUE Cinch Cable simplex M-M	5.0 m	11.99.4335 – 30
VALUE Cinch Cable simplex M-M	10.0 m	11.99.4339 – 20
VALUE Cinch Cable duplex M-M	5.0 m	11.99.4336 – 20
VALUE Cinch Cable duplex M-M	10.0 m	11.99.4338 – 15
ROLINE Cinch Cable duplex M-M	5.0 m	11.09.4336 – 20
ROLINE Cinch Cable duplex M-M	10.0 m	11.09.4338 – 15

Audio / Video Cable	Length	Order-No. – P.U.
3.5mm Cinch Cable (Picture D)		
VALUE 3.5mm (M) Cinch (2x M) Cable	1.5 m	11.99.4341 – 50
VALUE 3.5mm (M) Cinch (2x M) Cable	5.0 m	11.99.4345 – 30
VALUE 3.5mm (M) Cinch (2x F) Cable	0.2 m	11.99.4340 – 100
ROLINE 3.5mm (M) Cinch (2x M) Cable	1.5 m	11.09.4341 – 50
ROLINE 3.5mm (M) Cinch (2x M) Cable	5.0 m	11.09.4345 – 30
ROLINE 3.5mm (M) Cinch (2x M) Cable	10.0 m	11.09.4349 – 20
ROLINE 3.5mm (M) Cinch (2x F) Cable	0.2 m	11.09.4340 – 100
3.5mm Cable(Picture E)		
ROLINE 3.5mm Cable M-M	0.2 m	11.09.4500 – 150
ROLINE 3.5mm Cable M-M	1.0 m	11.09.4501 – 100
ROLINE 3.5mm Cable M-M	2.0 m	11.09.4502 – 50
ROLINE 3.5mm Cable M-M	3.0 m	11.09.4503 – 30
ROLINE 3.5mm Cable M-M	5.0 m	11.09.4505 – 20
ROLINE 3.5mm Cable M-M	10.0 m	11.09.4510 – 10
3.5mm Extension Cable (Picture F)		
VALUE 3.5mm Extension Cable M-F	2.0 m	11.99.4352 – 20
VALUE 3.5mm Extension Cable M-F	3.0 m	11.99.4353 – 50
VALUE 3.5mm Extension Cable M-F	5.0 m	11.99.4355 – 30
VALUE 3.5mm Extension Cable M-F	10.0 m	11.99.4359 – 20
ROLINE 3.5mm Extension Cable M-F	2.0 m	11.09.4352 – 20
ROLINE 3.5mm Extension Cable M-F	3.0 m	11.09.4353 – 50
ROLINE 3.5mm Extension Cable M-F	5.0 m	11.09.4355 – 30
ROLINE 3.5mm Extension Cable M-F	10.0 m	11.09.4359 – 20
S-Video Cable, Mini DIN 4pol. M-M (Picture G)		
VALUE S-Video Cable	3.0 m	11.99.4363 – 50
VALUE S-Video Cable	5.0 m	11.99.4365 – 30

VALUE / ROLINE Audio Adapters





















		Order-No. – P.U.
VALUE 3.5mm Adapter, 1x 3.5mm M to 2x 3.5mm F	A	11.99.4440 – 100
VALUE 3.5mm Adapter, 1x 3.5mm M to 2x RCA F	B	11.99.4441 – 100
ROLINE 4 Conductor 3.5 mm Stereo Plug (speaker+microphone), 15 cm	C	11.09.4441 – 20
ROLINE 3.5 mm Stereo Coupler, F/F	D	11.09.4442 – 10
ROLINE Stereo Adapter 3.5 mm Male - 6.35 mm Female	E	11.09.4443 – 10
ROLINE Stereo Adapter 6.35 mm Male - 3.5 mm Female	F	11.09.4444 – 10
ROLINE Stereo Adapter 3.5 mm Male - 2.5 mm Female	G	11.09.4445 – 10
ROLINE Stereo Adapter 2.5 mm Male - 3.5 mm Female	H	11.09.4446 – 10
ROLINE Audio Converter Digital to Analogue	I	14.01.3441 – 5

VALUE Internal SATA 3.0 Gbit/s Cable

- Cables for the connection of a SATA 3.0 Gbit/s (SATA II) HDD to a Serial ATA controller
- Support data transfer rates of up to 3.0 Gbit/s
- Compatible with SATA 1.5 Gbit/s (SATA I)
- Narrow cable design to increase Internal air flow
- 4-pin cable with ground wires
- Connectors: 2x internal 7-pin SATA

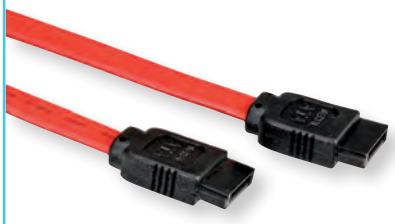

	Order-No. – P.U.
VALUE Internal SATA 3.0 Gbit/s Cable, 0.5 m	11.99.1555 – 100
VALUE Internal SATA 3.0 Gbit/s Cable, 1.0 m	11.99.1560 – 100
VALUE Internal SATA 3.0 Gbit/s Cable, angled, 0.5 m	11.99.1556 – 100
VALUE Internal SATA 3.0 Gbit/s Cable, angled, 1.0 m	11.99.1561 – 100

ROLINE Internal SATA 3.0 Gbit/s Cable

The narrow high quality cable design simplifies cable, routing and installation and improves the internal air flow.

- Connect your high-speed Serial ATA device (e. g. HDD) to a Serial ATA Controller
- Support data transfer rates of up to 3.0 Gbit/s (SATA II)
- Compatible with SATA 1.5 Gbit/s (SATA I)
- 4-pin cable with ground wires
- Connectors: 2x internal 7-pin SATA



	Order-No. – P.U.
ROLINE Internal SATA 3.0 Gbit/s Cable, 0.5 m	11.03.1555 – 100
ROLINE Internal SATA 3.0 Gbit/s Cable, angled, 0.5 m	11.03.1556 – 100
ROLINE Internal SATA 3.0 Gbit/s Cable, angled, 1.0 m	11.03.1561 – 100

ROLINE Internal SATA 3.0 Gbit/s Cable with Latch

Utilizing the SATA II specification and with it's unique locking latch, you can rest assured your system is safe and secure.

- Connect your high-speed Serial ATA device (e. g. HDD) to a Serial ATA Controller
- Support data transfer rates of up to 3.0 Gbit/s
- Compatible with SATA 1.5 Gbit/s (SATA I)
- With latch on both connectors
- Narrow cable design to increase Internal air flow
- 4-pin cable with ground wires
- Connectors: 2x internal 7-pin SATA

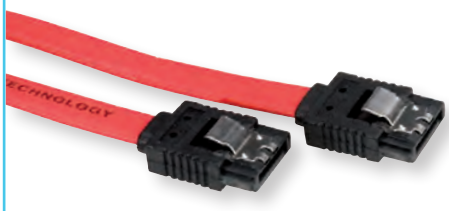

	Order-No. – P.U.
ROLINE Internal SATA 3.0 Gbit/s Cable with Latch, 0.5 m	11.03.1554 – 50
ROLINE Internal SATA 3.0 Gbit/s Cable with Latch, 1.0 m	11.03.1559 – 50

VALUE Internal SATA 6.0 Gbit/s Cable with Latch

Some of the advantages of the new ATA series (SATA technology) are conditional on the use of relatively thin and flexible cables, which simplifies the use in the computer substantially and also brings a clear improvement to the air flow inside the computer housing.

- Connect your high-speed Serial ATA device (e. g. HDD) to a Serial ATA controller
- Support data transfer rates of up to 6.0 Gbit/s
- Compatible with SATA 1.5 Gbit/s (SATA I) and 3.0 Gbit/s (SATA II)
- 4-pin cable with ground wires
- Connectors: 2x internal 7-pin SATA with latch on both connectors

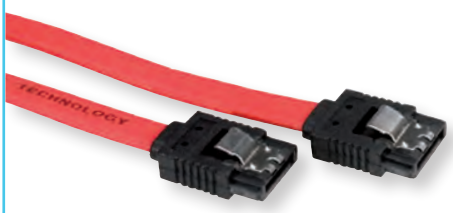

	Order-No. – P.U.
VALUE Internal SATA 6.0 Gbit/s Cable with Latch, 0.5 m	11.99.1550 – 20
VALUE Internal SATA 6.0 Gbit/s Cable with Latch, 1.0 m	11.99.1551 – 20

ROLINE Internal SATA 6.0 Gbit/s Cables with Latch

Utilizing the SATA III specification and with it's unique locking latch, you can rest assured your system is safe and secure.

- Connect your high-speed Serial ATA device (e. g. HDD) to a Serial ATA Controller
- Support data transfer rates of up to 6.0 Gbit/s
- Compatible with SATA 1.5 Gbit/s (SATA I) and 3.0 Gbit/s (SATA II)
- Cable With latch on both connectors
- Narrow cable design to increase internal air flow
- 4-pin cable with ground wires
- Connectors: 2x internal 7-pin SATA



	Order-No. – P.U.
ROLINE Internal SATA 6.0 Gbit/s Cable with Latch, 0.5 m	11.03.1552 – 50
ROLINE Internal SATA 6.0 Gbit/s Cable with Latch, 1.0 m	11.03.1553 – 50

ROLINE Internal SATA 6.0 Gbit/s Cables, angled, with Latch

Utilizing the SATA III specification and with it's unique locking latch, you can rest assured your system is safe and secure.

- Connect your high-speed Serial ATA device (e. g. HDD) to a Serial ATA Controller
- Support data transfer rates of up to 6.0 Gbit/s
- Compatible with SATA 1.5 Gbit/s (SATA I) and 3.0 Gbit/s (SATA II)
- Cable with latch on both connectors
- Cable with connector angled to one side, with pull for easy removal
- Narrow cable design to increase internal air flow
- 4-pin cable with ground wires
- Connectors: 2x internal 7-pin SATA

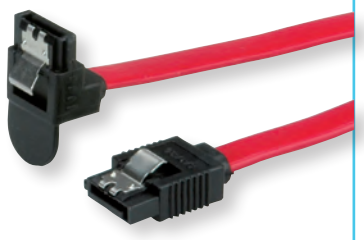

	Order-No. – P.U.
ROLINE Internal SATA 6.0 Gbit/s Cable, angled, with Latch, 0.5 m	11.03.1564 – 25
ROLINE Internal SATA 6.0 Gbit/s Cable, angled, with Latch, 1.0 m	11.03.1565 – 25

roline® Designed for Professionals

ROLINE External SATA 6.0 Gbit/s Cables

ROLINE high quality HDD cables for the connection of an external SATA hard disk.

- Support data transfer rates of up to 6.0 Gbit/s (SATA III)
- Compatible with SATA 3.0 Gbit/s (SATA II), SATA 1.5 Gbit/s (SATA I)
- 4-pin cable with ground wires
- Connectors: 2x external 7-pin SATA 3.0 Gbit/s



	Order-No. – P.U.
ROLINE External SATA 6.0 Gbit/s Cable, 0.5 m	11.03.1548 – 50
ROLINE External SATA 6.0 Gbit/s Cable, 1.0 m	11.03.1549 – 50

roline® Designed for Professionals

ROLINE Adapter, mSATA SSD to 2.5 SATA 22pin

Best Solution that convert and easily retain mSATA SSD as normally standard 2.5 SATA SSD

- Convert Full Size mSATA SSD to 2.5 Form Factor
- Supports up to SATA 6Gb/s
- Compatible with 2.5 SATA drive mechanical specifications
- 22 pin SATA (signals and power) male connector on board
- Transparent to the operating system and no driver required
- Latch mSATA connector on board, a screw to fix the mSATA module isn't neccessary
- Contents: adapter, 2.5 drive metal frame (with 8 mounting holes and 4 HDD screws), manual

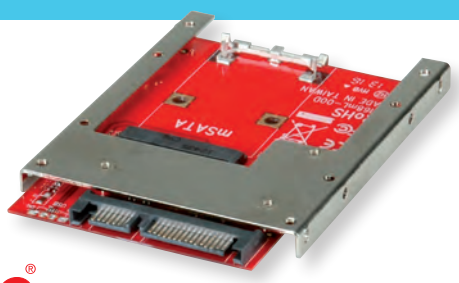

roline® Designed for Professionals

	Order-No. – P.U.
ROLINE Adapter, mSATA SSD to 2.5 SATA 22pin	11.03.1567 – 10

ROLINE M.2 to SATA III SSD H/W adapter, 2x M.2 NGFF SSD, bootable and RAID-capable

2.5-inch H/W adapter for the installation of two M. 2 SSDs (NGFF), bootable and RAID-compatible and with 6Gbit/s SATA connection!

- Supports two M. 2 NGFF SSDs with form factor 2230, 2242, 2260 and 2280
- M.2 NGFF SATA SSDs can be primary boot device and contain operating system and applications.
- RAID 0 and RAID 1 configurable via hardware or software; configuration on the hardware side via 6 pins with jumper (jumper table on the back of the board)
- The 2.5 inch H/W adapter can be installed in a 2.5" housing and is therefore perfectly suited for mobile use.
- No drivers required
- Contents: HDD adapter

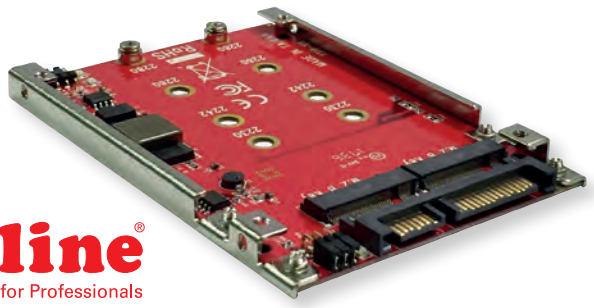

roline® Designed for Professionals

	Order-No. – P.U.
ROLINE M.2 to SATA III SSD H/W adapter, 2x M.2 NGFF SSD, bootable and RAID-capable	16.01.4145 – 10

ROLINE Internal Power Supply Cables

- **11.03.1016: (A)**
- Extension cable from the power supply to the ATX 2.0 motherboard; 24-pin motherboard connector (M/F); length: 0.3 m

- **11.03.1019: (B)**
- For connection of a power supply to a Intel Pentium mainboard with P4 port via standard power supply and HDD-4-pin power plug; length: 0.15m

- **11.03.1021: (C)**
- Additional power supply cable for mainboard and CPU. Plugs: Power 8 pin PCI Express > HDD-4-pin power plug (3 pin connected); length: 0.15 m

- **11.03.1010: (D)**
- Internal power supply cables for an additional type 5.25 or type 3.5 disk drives; Y-model; 4-pin HDD M to 4-pin HDD F / 4-pin FDD F; length: 0.3 m

- **11.03.1005: (E)**
- Internal power supply cables for two additional type 5.25 disk drives; Y-model; 4-pin HDD M to 2x 4-pin HDD F; length: 0.3 m

- **11.03.1003: (F)**
- To expand the 4-pin HDD plug to four 4-pin HDD plugs, angled (90°); length: 2x 0.45 m; distance between 4-pin HDD plug and first angled 4-pin HDD plug: 0.3 m; distance between first angled 4-pin HDD plug and second angled 4-pin HDD plug: 0.15 m

- **11.03.1050: (G)**
- To convert the 4-pin HDD plug to two SATA power connectors; to connect two SATA devices to one 4-pin HDD plug; length: 2x 0.12 m

- **11.03.1055: (H)**
- Adapter cable for converting the 4-pin HDD interface to the SATA power connector; 4-pin cable, connections: 4-pin HDD plug to 15-pin SATA power connector; length: 0.15 m

- **11.03.1061: (I)**
- Adapter cable for converting the 4-pin HDD interface to the SATA power connector; 4-pin HDD plug to 15-pin SATA power connector; angled (90°); length: 0.1 m

- **11.03.1060: (J)**
- Adapter for converting the 4-pin HDD interface to the SATA power connector

- **11.03.1040: (K)**
- Y-adapter cable for converting the SATA power connector to up to 3 additional 4-pin HDD plugs; 3x 4-pin HDD plug to 1x SATA; length 11.5 cm and 12.5 cm

- **11.03.1041: (L)**
- Y-adapter cable for converting one SATA power connector to up to 3 additional SATA power connectors; 3x SATA M to 1x SATA; length 0.24 m and 0.23 m

- **11.03.1042: (M)**
- Extension cable for a SATA power connection; SATA M to SATA F; length: 0.3 m



	Order-No.	– P.U.
ROLINE ATX 2.0 Power Extension Cable, 24-pin, 0.3 m	11.03.1016	– 50
ROLINE Internal Power Cable, 4-pin HDD/ ATX12V-P4 4-pin Power, 0.15 m	11.03.1019	– 10
ROLINE Internal Power Cable, 8 pin PCI Express Plug - P4 Plug, 0.15 m	11.03.1021	– 10
ROLINE Int. Y-Power Cable, 4-pin HDD to 4-pin HDD+4-pin FDD, 0.3 m	11.03.1010	– 100
ROLINE Internal Y-Power Cable, 4-pin HDD to 2x 4-pin HDD, 0.3 m	11.03.1005	– 100
ROLINE Internal Y-Power Cable, 4-pin HDD to 4x 4-pin HDD (90°), 0.15 m	11.03.1003	– 50
ROLINE Internal Y-Power Cable, 4-Pin HDD to 2x SATA, 0.12 m	11.03.1050	– 50
ROLINE Power Adapter Cable, 4-Pin HDD to SATA, 0.15 m	11.03.1055	– 50
ROLINE Power Adapter Cable, 4-pin HDD to SATA (90°), 0.1 m	11.03.1061	– 25
ROLINE Power Adapter, 4-pin HDD to SATA	11.03.1060	– 25
ROLINE Internal Y-Power Cable, SATA to 3x 4-pin HDD	11.03.1040	– 25
ROLINE Internal Y-Power Cable, SATA to 3x SATA	11.03.1041	– 25
ROLINE SATA Power Extension Cable, 0.3 m	11.03.1042	– 25

roline®
Designed for Professionals

VALUE / ROLINE Monitor Power Cables, IEC 320 C14 - C13

- Monitor power cable with moulded plugs
- Connectors: IEC 320-C14 plug to IEC 320-C13 plug
- Nominal data: 250V AC/10A

	Order-No.	P.U.
VALUE Monitor Power Cable, IEC 320 C14 - C13, black, 0.5 m	19.99.1505	20
VALUE Monitor Power Cable, IEC 320 C14 - C13, black, 1 m	19.99.1510	20
VALUE Monitor Power Cable, IEC 320 C14 - C13, black, 1.8 m	19.99.1515	50
VALUE Monitor Power Cable, IEC 320 C14 - C13, black, 3 m	19.99.1530	50
ROLINE Monitor Power Cable, IEC 320 C14 - C13, black, 0.5 m	19.08.1505	50
ROLINE Monitor Power Cable, IEC 320 C14 - C13, black, 1 m	19.08.1510	30
ROLINE Monitor Power Cable, IEC 320 C14 - C13, black, 1.8 m	19.08.1515	50
ROLINE Monitor Power Cable, IEC 320 C14 - C13, black, 3 m	19.08.1530	50
VALUE Monitor Power Cable, IEC 320 C14 - C13, white, 1.8 m	19.99.1516	50
ROLINE Monitor Power Cable, IEC 320 C14 - C13, red, 0.8 m	19.08.1525	25
ROLINE Monitor Power Cable, IEC 320 C14 - C13, red, 1.8 m	19.08.1520	25
ROLINE Monitor Power Cable, IEC 320 C14 - C13, red, 3 m	19.08.1531	25
ROLINE Monitor Power Cable, IEC 320 C14 - C13, yellow, 0.8 m	19.08.1526	25
ROLINE Monitor Power Cable, IEC 320 C14 - C13, yellow, 1.8 m	19.08.1521	25
ROLINE Monitor Power Cable, IEC 320 C14 - C13, yellow, 3 m	19.08.1532	25
ROLINE Monitor Power Cable, IEC 320 C14 - C13, blue, 0.8 m	19.08.1527	25
ROLINE Monitor Power Cable, IEC 320 C14 - C13, blue, 1.8 m	19.08.1522	25
ROLINE Monitor Power Cable, IEC 320 C14 - C13, blue, 3 m	19.08.1533	25
ROLINE Monitor Power Cable, IEC 320 C14 - C13, green, 0.8 m	19.08.1528	25
ROLINE Monitor Power Cable, IEC 320 C14 - C13, green, 1.8 m	19.08.1523	25
ROLINE Monitor Power Cable, IEC 320 C14 - C13, green, 3 m	19.08.1534	25



VALUE Power Cables, straight IEC Conncector

Cable with safety plug 90° angulate (Schuko plug) and IEC 320-C13

- Plugs: Schuko plug to C13 plug
- Nominal data: 250V AC/2.5A

		Order-No.	P.U.
VALUE Power Cable, straight IEC Conncector, black, 0.6 m	A	19.99.1017	50
VALUE Power Cable, straight IEC Conncector, black, 1.8 m	A	19.99.1018	50
VALUE Power Cable, straight IEC Conncector, white, 0.6 m	B	19.99.1016	50
VALUE Power Cable, straight IEC Conncector, white, 1.8 m	B	19.99.1019	50
VALUE Power Cable, angled IEC Connector, black, 1.8 m	C	19.99.1118	50
VALUE Power Cable, straight Compaq Connector, black, 1.8 m	D	19.99.1028	20

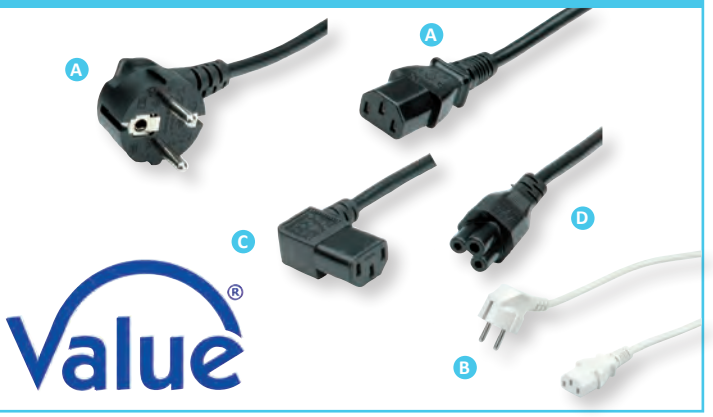

ROLINE Power Cables, straight IEC Connector

Cable with safety plug 90° angulate (Schuko plug) and IEC 320-C13

- Plugs: Schuko plug to C13 plug
- Nominal data: 250V AC/10A
- Colour: black

		Order-No.	P.U.
ROLINE Power Cable, straight IEC Connector, black, 1.8 m	A	19.08.1018	50
ROLINE Power Cable, straight IEC Connector, 3 m	A	19.08.1030	50
ROLINE Power Cable, angled IEC Connector, 1.8 m	B	19.08.1118	50
ROLINE Power Cable, straight Compaq Connector, 1.8 m	C	19.08.1028	20



ROLINE Power Cables, straight IEC Connector

A great solution for neat cable management in any data center! We recommend our colored monitor power cables, e.g. 19.08.1520 (C14-C13), as additional products.

Cable with safety plug 90° angulate (german type) and IEC 320-C13

- Plugs: safety plug to C13 plug
- Nominal data: 250V AC/2.5A

roline® Designed for Professionals

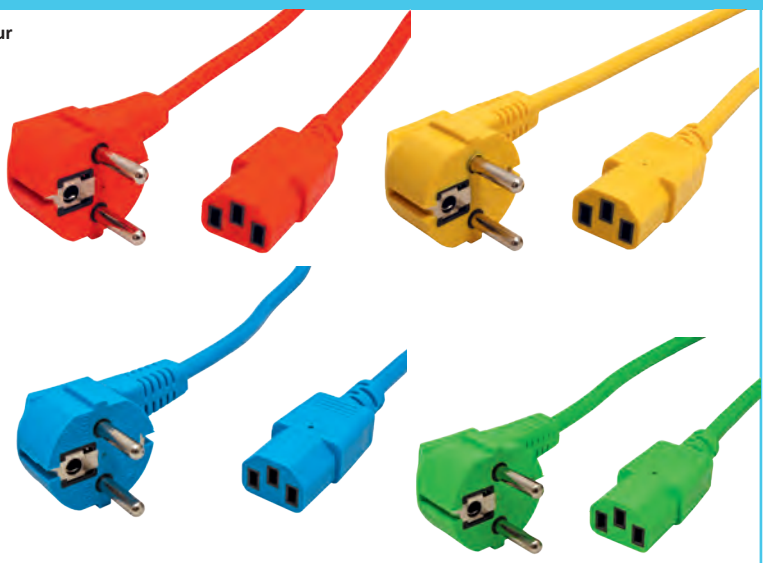

	Order-No. – P.U.
ROLINE Power Cable, straight IEC Connector, red, 1.8 m	19.08.1010 – 25
ROLINE Power Cable, straight IEC Connector, yellow, 1.8 m	19.08.1011 – 25
ROLINE Power Cable, straight IEC Connector, blue, 1.8 m	19.08.1012 – 25
ROLINE Power Cable, straight IEC Connector, green, 1.8 m	19.08.1013 – 25

VALUE / ROLINE Euro Power Cables, 2-pin

- Suitable e.g. for notebook power supply
- Connectors: Europlug to IEC320-C7 plug
- Moulded plugs
- 250V AC/2.5A

roline® Designed for Professionals

Value®

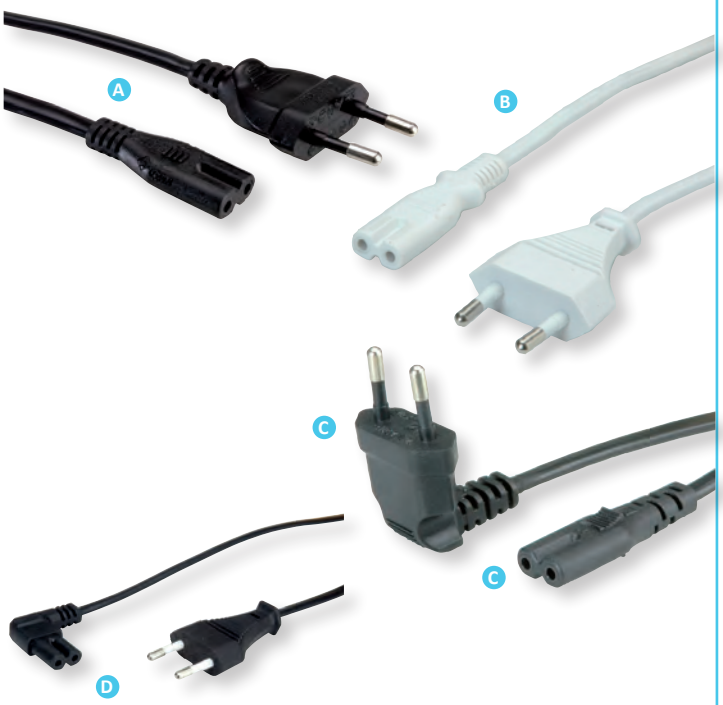

		Order-No. – P.U.
VALUE Euro Power Cable, 2-pin, black, 1 m	A	19.99.2089 – 100
VALUE Euro Power Cable, 2-pin, black, 1.8 m	A	19.99.2096 – 100
VALUE Euro Power Cable, 2-pin, black, 3 m	A	19.99.2092 – 50
VALUE Euro Power Cable, 2-pin, black, 5 m	A	19.99.2094 – 50
VALUE Euro Power Cable, 2-pin, white, 1 m	B	19.99.2090 – 100
VALUE Euro Power Cable, 2-pin, white, 1.8 m	B	19.99.2095 – 100
VALUE Euro Power Cable, 2-pin, white, 3 m	B	19.99.2091 – 50
ROLINE Euro Power Cable, 2-pin, black, 1.8 m	A	19.07.2096 – 100
ROLINE Euro Power Cable, 2-pin, black, 3 m	A	19.07.2073 – 50
ROLINE Euro Power Cable, 2-pin, black, 5 m	A	19.07.2078 – 50
VALUE Euro Power Cable, 2-pin, C/ connector 90° angled, black, 1.8 m	D	19.99.2088 – 100
ROLINE Euro Power Cable, 2-pin, angled, black, 1.8 m	C	19.07.2093 – 100

VALUE Notebook Power Cable, Swiss, 3-pin

- Molded, SEV-tested power cord for connecting notebooks
- Rated data: 2.5 A / 250V AC
- Color: black / white



roline® Designed for Professionals

Value®

	Order-No. – P.U.
VALUE Notebook Power Cable, 3-pin, CH, black, 1 m	19.99.2097 – 50
ROLINE Notebook Power Cable, 3-pin, CH, black, 1.8 m	19.07.2097 – 50
VALUE Power Cable, Straight IEC, CH, black, 0.8 m	19.99.1221 – 50
VALUE Power Cable, Straight IEC, CH, black, 1.8 m	19.99.1220 – 50
VALUE Power Cable, Straight IEC, CH, black, 3 m	19.99.1222 – 50
VALUE Power Cable, Straight IEC, CH, white, 1.8 m	19.99.1223 – 50

VALUE Power Cables, Italy

Cable with Italy safety plug 90° angled and IEC 320-C13

- Plugs: Italy plug to C13 plug
- Nominal data: 250V AC/2.5A
- Colour: black

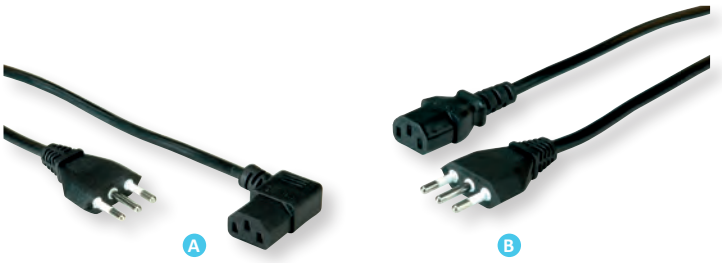

		Order-No.	P.U.
VALUE Power Cable, angled IEC Connector, Italy, black, 1.8 m	A	19.99.2070	50
VALUE Power Cable, straight IEC Conncector, Italy Version, black, 1.8 m	B	19.99.2072	50

VALUE UK Power Cables, 3A/10A

- Plugs: UK plug to C5 / C7 / C13 plug
- Nominal data: 250V AC / 3A or 10A
- Colour: black

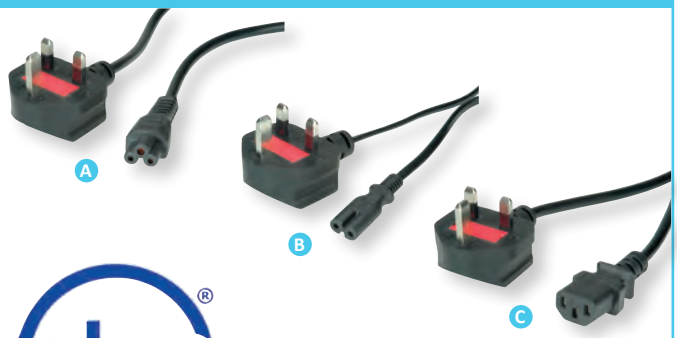

		Order-No.	P.U.
VALUE UK Power Cable, straight Compaq Connector, 3A, black, 1.8 m	A	19.99.2016	50
VALUE UK Power Cable, 2-pin, black, 3A, 1.8 m	B	19.99.2017	50
VALUE UK Power Cable, straight IEC Conncector, 10A, black, 1.8 m	C	19.99.2018	50
VALUE UK Power Cable, straight IEC Conncector, 10A, black, 3 m	C	19.99.2019	20

ROLINE Power Cable with German Type Connector / Open End, AC 230V

- Cable with Schuko male connector, 16A / 230VAC
- Cable: H05VV-F 3G1 3x 0.75mm²
- Nominal data: 250 VAC/16 A
- Colour: black

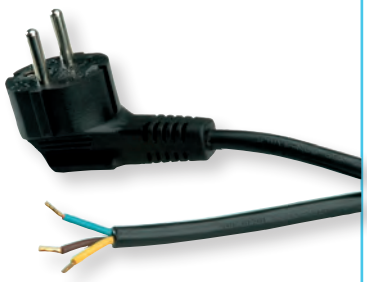

	Order-No.	P.U.
ROLINE Power Cable w. German connector / open end, AC 230V, black, 1.8 m	19.08.1110	10
ROLINE Power Cable w. German connector / open end, AC 230V, black, 3.0 m	19.08.1111	10

VALUE / ROLINE Y-Power Cable, 2x straight IEC Connector

Cable with safety plug 90° angled (3P German Plug) and 2x IEC 320-C13 plug straight

- Suitable for PC and monitor power connection
- Connectors: 3P German plug to 2x C13 plug
- Nominal data: 250V AC/10A

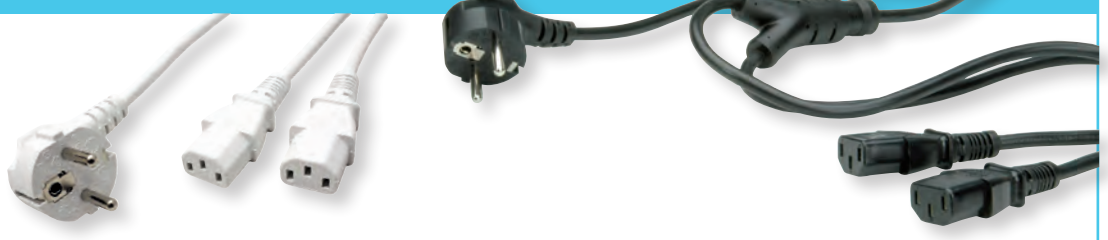

	Order-No.	P.U.
VALUE Y-Power Cable, 2x straight IEC Connector, black, 2 m	19.99.1022	50
ROLINE Y-Power Cable, 2x straight IEC Connector, black, 2 m	19.08.1022	50
ROLINE Y-Power Cable, 2x straight IEC Connector, white, 2 m	19.08.1023	50

VALUE / ROLINE Power Cord German Safety Plug, IEC320 - C19 16A

Cable often used for UPS from 3000 VA and for connecting Blade servers.

- Connection cable 16 A with IEC320 C19 Female and German safety plug, angled
- Cable: H05VV-F 3G1.5 3x 1.5mm²
- Nominal data: 250 VAC/16 A
- Colour: black

	Order-No. – P.U.
VALUE Power Cord German Type, IEC320 - C19 16A, black, 2.0 m	19.99.1552 – 20
VALUE Power Cord German Type, IEC320 - C19 16A, black, 3.0 m	19.99.1553 – 20
ROLINE Power Cord German Type, IEC320 - C19 16A, black, 2.0 m	19.08.1552 – 14
ROLINE Power Cord German Type, IEC320 - C19 16A, black, 3.0 m	19.08.1553 – 10
ROLINE Power Cord IEC320/C19 - C20 16A, black, 2.0 m	19.08.1562 – 14
ROLINE Power Cord IEC320/C19 - C20 16A, black, 3.0 m	19.08.1563 – 10



VALUE Extension Cable with 3P. German connectors, AC 230V

- Extension cable with 3P. German male and female connector, 16A / 230V ~
- Cable: H05VV-F 3G1.5 3x 1.5mm²
- Nominal data: 250 VAC/16 A
- Colour: black / white

	Order-No. – P.U.
VALUE Extension Cable with 3P. German connectors, AC 230V, black, 3 m	19.99.1166 – 20
VALUE Extension Cable with 3P. German connectors, AC 230V, black, 5 m	19.99.1167 – 20
VALUE Extension Cable with 3P. German connectors, AC 230V, black, 10 m	19.99.1168 – 10
VALUE Extension Cable with 3P. German connectors, AC 230V, white, 3 m	19.99.1176 – 20
VALUE Extension Cable with 3P. German connectors, AC 230V, white, 5 m	19.99.1177 – 20
VALUE Extension Cable with 3P. German connectors, AC 230V, white, 10 m	19.99.1178 – 10



VALUE Extension Cable with 3P. Connectors, UTE Version, AC 230V

Extension cable with German Type plug and socket, 16A/230V
- Extension cable with 3P. male and female connector, UTE Version, 16A / 230V ~
- Cable: H05VV-F 3G1.5 3x 1.5mm²
- Nominal data: 250 VAC/16 A
- Colour: black
- **Suitable for France, Czech Republic, Slovakia**

	Order-No. – P.U.
VALUE Extension Cable with 3P. Connectors, UTE Version, AC 230V, black, 3 m	19.99.1170 – 20
VALUE Extension Cable with 3P. Connectors, UTE Version, AC 230V, black, 5 m	19.99.1171 – 20
VALUE Extension Cable with 3P. Connectors, UTE Version, AC 230V, black, 10 m	19.99.1172 – 10
VALUE Extension Cable with 3P. Connectors, UTE Version, AC 230V, white, 3 m	19.99.1173 – 20
VALUE Extension Cable with 3P. Connectors, UTE Version, AC 230V, white, 5 m	19.99.1174 – 20
VALUE Extension Cable with 3P. Connectors, UTE Version, AC 230V, white, 10 m	19.99.1175 – 10



VALUE Extension Cable T12/T13 (CH)

- Extension cable
- T12 plug / T13 socket
- Type Td 3x1.5 mm²
- Colour: black / white

	Order-No. – P.U.
VALUE Extension Cable T12/T13 (CH), 3 m	19.99.1180 – 20
VALUE Extension Cable T12/T13 (CH), 5 m	19.99.1181 – 20
VALUE Extension Cable T12/T13 (CH), 10 m	19.99.1182 – 10
VALUE Extension Cable T12/T13 (CH), white, 3 m	19.99.1183 – 20
VALUE Extension Cable T12/T13 (CH), white, 5 m	19.99.1184 – 20
VALUE Extension Cable T12/T13 (CH), white, 10 m	19.99.1185 – 10



VALUE Power Cable, German Socket to IEC C14 Plug

Cable with safety socket (German socket) and IEC 320-C14

- Plugs: German socket to C14 plug
- Nominal data: 250V AC/10A
- Colour: black

- Note: only for UPS use



	Order-No. – P.U.
VALUE Power Cable, German Socket to IEC C14 Plug, black, 0.3 m	19.99.1117 – 20

VALUE Power Cable IEC320/C14 Male - C5 Female

Ideal for use as extension/conversion from an IEC power lead to power a laptop with a IEC C5 socket input.

- Voltage 250 V AC
- Current: 2.5 A
- Connector type:
- Male Plug IEC60320 C14
- Female Connector IEC60320 C5
- Cable construction: 3 wires
- Conductors / Wires: Gauge 1.0mm²
- Material: PVC
- Color: Black

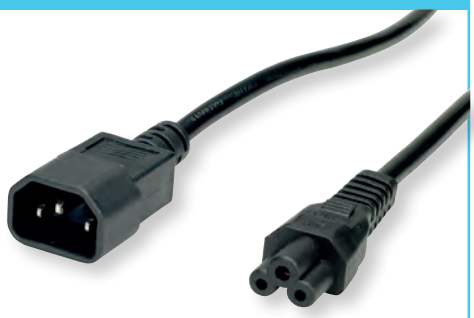

	Order-No. – P.U.
VALUE Power Cable IEC320/C14 Male - C5 Female, black, 1.8 m	19.99.1119 – 20

VALUE Power Cable IEC320/C14 Male - C15 Female

This type of connector (C15) is specifically designed for higher temperature devices, e.g. computing networking cabinets or server rooms, and PoE (Power over Ethernet) switches with higher wattage power supplies.

- Voltage 250 V AC
- Current: 10 A
- Connector type:
- Male Plug IEC60320 C14
- Female Connector IEC60320 C15 (hot temperature connector)
- Cable construction: 3 wires
- Conductors / Wires: Gauge 1.0mm²
- Material: PVC
- Color: Black

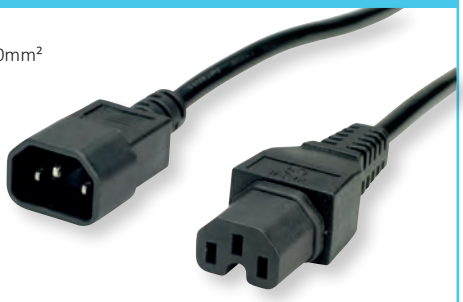

	Order-No. – P.U.
VALUE Power Cable IEC320/C14 Male - C15 Female, black, 0.5 m	19.99.1120 – 20
VALUE Powercable IEC320/C14 Male - C15 Female, black, 1 m	19.99.1121 – 20
VALUE Powercable IEC320/C14 Male - C15 Female, black, 1.8 m	19.99.1122 – 20
VALUE Powercable IEC320/C14 Male - C15 Female, black, 3 m	19.99.1123 – 20

VALUE Power Cable, NEMA-5 – IEC C13 Conncector, USA

Cable with plug NEMA-5 and IEC-C13

- Plugs: NEMA-5 male to C13 female
- Nominal data: 125V AC/10A
- Colour: black
- **Suitable for USA**

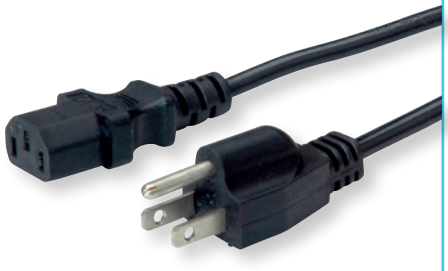

	Order-No. – P.U.
Power Cable, NEMA-5 – IEC C13 Conncector, USA, black, 1.8 m	19.99.1495 – 50

Filter Ferrite Cores

- For interference suppression on data lines
- For PC and peripherals
- Simple subsequent assembly
- Split conduit cores
- Nylon clip casing
- Protected against damage
- The casing clamps securely on the cable
- Universal application
- Casing UL 94-V-O

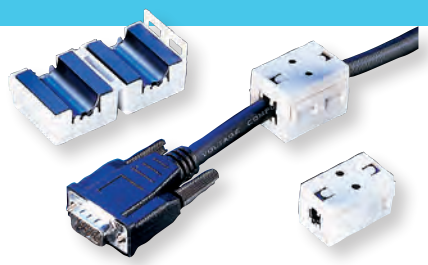

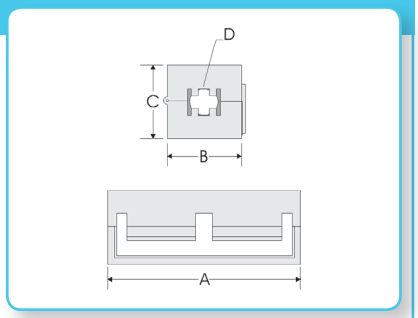

	Order-No.	P.U.
Filter Ferrite - 6.5 mm	11.05.1006	200
Filter Ferrite - 10 mm	11.05.1010	190

Model	Dimensions in mm A	B	C	D	Impedance (Ohm) 25MHz	100MHz	Frequency Range
Filter-ferrite-6.5	32.0	19.5	19.0	6.5	125	275	300MHz
Filter-ferrite-10	32.0	24.5	23.0	10.0	130	290	300MHz

Should not be mounted on the cable any further away than 10 cm from the plug!

ROLINE Mini Gender Changers

- Connection between two similar connectors
- Low leverage on the computer connector due to compact construction (17 mm long)
- All lines are connected 1:1
- Incl. locking screws



roline®
Designed for Professionals

	Order-No.	P.U.
ROLINE Mini Gender Changer, 9-pin M - M	12.03.2025	50
ROLINE Mini Gender Changer, 9-pin F - F	12.03.2030	50
ROLINE Mini Gender Changer, 15-pin HD M - M	12.03.2016	50
ROLINE Mini Gender Changer, 15-pin HD F - F	12.03.2021	50
ROLINE Mini Gender Changer, 25-pin M - M	12.03.2005	50
ROLINE Mini Gender Changer, 25-pin F - F	12.03.2010	50

ROLINE Cat.5e Modular Plug, 8p8c, UTP, for Stranded Wire

- Unshielded modular plug for round cables
- For stranded wire AWG26
- For Cat.5e cabling systems
- Package unit: 10 pieces

roline®
Designed for Professionals

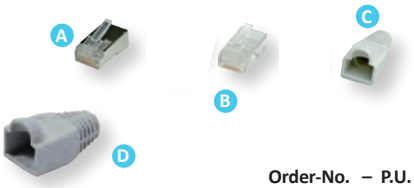

		Order-No.	P.U.
ROLINE Cat.5e Modular Plug, 8p8c, UTP, for Stranded Wire, 10 pcs.	A	12.01.1087	100
ROLINE Cat.5e Modular Plug, 8p8c, STP, for Stranded Wire, 10 pcs.	B	12.01.1089	100
ROLINE Kink protection hood for RJ-45, grey, 10 pcs.	C	12.01.1085	100
VALUE Kink protection hood for RJ-45 connector, grey, 10 pcs.	D	12.99.0000	10

RJ-12 Cable, 6P4C

- 4-wire flat telephone cable with 6-pole 4-contact RJ-12 (Western) plug
- Colour: white
- All pins connected 1: 1

Value®



	Order-No.	P.U.
RJ-12 Cable, 6P4C, 6 m	11.04.1906	10
RJ-12 Cable, 6P4C, 15 m	11.04.1915	10

ROLINE DB9 plug - RJ-45 socket 8P / 8C 8-Wire

- Simple assembly of serial lines through the modularity of the RJ45 connection systems
- An adapter is applied to each end and connected with a 8-wire prepared telephone cable

roline®
Designed for Professionals

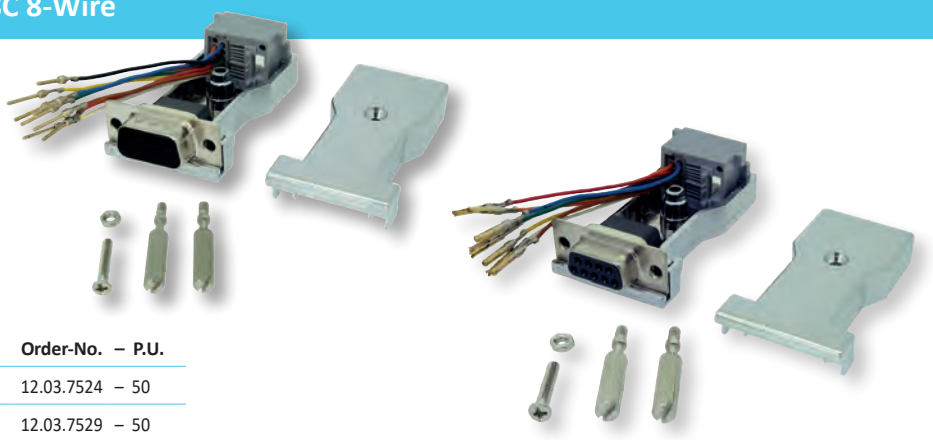

	Order-No.	P.U.
ROLINE DB9 plug - RJ-45 socket 8P / 8C 8-Wire	12.03.7524	50
ROLINE DB9 socket - RJ-45 socket 8P / 8C 8-Wire	12.03.7529	50

D-Sub Connector Casings

- Suitable for D-Sub plug connectors
- Screwed, stable plastic casing
- Internal strain reduction
- With UN-4-40 locking screws which can't be lost
- Without connector

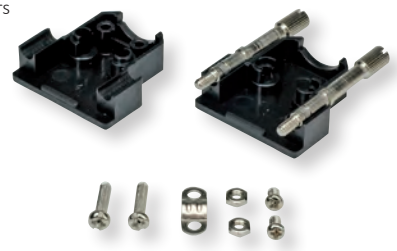

	Order-No. – P.U.
D-Sub Connector Casing 9-pin/HD15	12.01.4005 – 200

ROLINE USB 2.0 Gender Changer, Type A F/F

- Compact and small design
- Adaption of frequent USB interfaces
- Colour: Black

roline® Designed for Professionals



		Order-No. – P.U.
ROLINE USB 2.0 Gender Changer, Type A F/F	A	12.03.2960 – 50
ROLINE USB 3.0 Gender Changer, Type A F/F	B	12.03.2991 – 20

VALUE PS/2 to USB Adapter

- Only for USB / PS/2 combo mouses
- USB mouse has to be connected to the adapter and the adapter has to be connected to the PS/2 port of the PC
- Ports: 1x USB Type A F, 1x PS/2 M

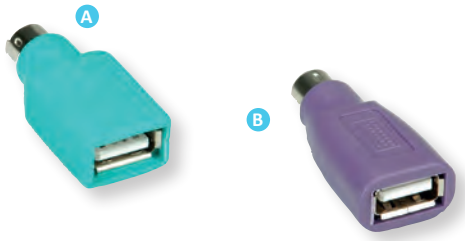

		Order-No. – P.U.
VALUE PS/2 to USB Adapter, Mouse, green	A	12.99.1072 – 25
VALUE PS/2 to USB Adapter, Keyboard, purple	B	12.99.1073 – 25

VALUE USB to 2x PS/2 Adapter Cable

- Ideal for the use with actual notebooks, which do not offer PS/2 ports any longer
- The converter offers two additional PS/2 ports e.g to connect keyboard and mouse
- Compact converter for the connection to the USB interface of a notebook or PC
- Power over USB interface
- Connection: 1x USB Type A Male, 2x PS/2 F

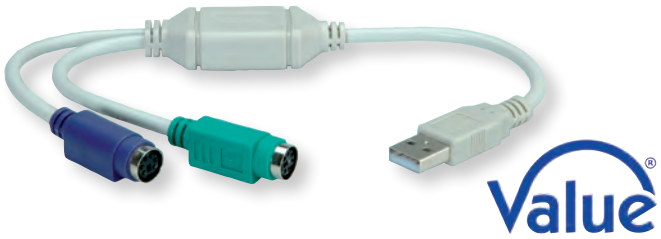

	Order-No. – P.U.
VALUE USB to 2x PS/2 Adapter Cable	12.99.1075 – 50

ROLINE USB to IEEE1284 Converter, C36

NEW

- For the connection of a printer with parallel port (IEEE 1284) to a PC with USB port
- USB specification revision 1.1 compliant
- Truly bi-directional communication between PC and printer
- Connection PC: USB type A Male
- Connection printer: Centronics 36-pole Male
- Bus powered
- Length: 1.8 m
- Colour: black
- Supported operating systems: Windows 2000/7/8/10, Mac OS X
- Contents: Converter cable



roline® Designed for Professionals

	Order-No. – P.U.
ROLINE USB to IEEE1284 Converter, C36, black, 1.8 m, 1.8 m	12.02.1092 – 10

VALUE USB to IEEE1284 Converter Cable

- To connect a printer with parallel interface (IEEE1284) to a PC with USB port
- Easy to install
- Power supplied by USB interface
- Connector: Centronics 36-pole male/ USB Type A Male
- Colour: turquiose (semi translucent)
- Contents: Converter cable



	Order-No. – P.U.
VALUE USB to IEEE1284 Converter Cable, 1.8 m	12.99.1150 – 10

VALUE USB to RS-485 Converter

This converter provides an extra Serial Com port via USB connection

- To connect serial devices (e.g. modem) to one USB port
- Can be configured to work with RS-485 peripherals
- Full compliance with the USB specification 1.1
- Supports data transfer rates of up to 3 Mbit/s
- USB bus powered - no external power supply is needed
- Plug & play
- Supports Windows 98SE / ME / 2000 / XP / Vista / 7
- Contents: Converter, driver CD, manual



	Order-No.	P.U.
VALUE USB to RS-485 Converter	12.99.1074	25

Converter Cable Parallel to USB

- To connect a printer with USB port to a PC with parallel interface (IEEE1284)
- Easy to install
- Power supplied by external power supply unit that is fixed to the converter
- Connection PC: parallel interface (IEEE1284) DB25 F
- Connection printer: USB type B
- Length: 1.8 m
- Colour: black
- Contents: Converter (cable length: 1.8 m) with moulded Power Supply Unit

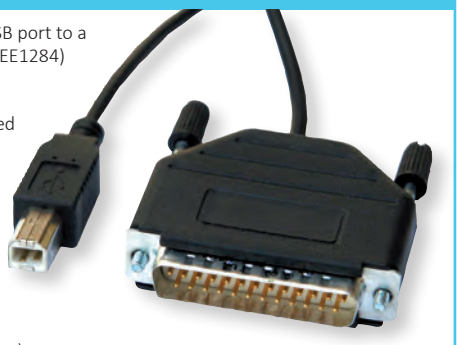

	Order-No.	P.U.
Converter Cable Parallel to USB, 1.8 m	12.02.1074	1

VALUE USB 3.2 Gen 1 to SATA 6.0 Gbit/s Adapter

The simple way to connect a SATA III 6.0 Gbit/s hard drive to a computer or notebook via USB 3.1 / USB 3.2 Gen 1 Type A.

- Easy way to connect a SATA 6.0 Gbit/s hard drive to a computer or notebook via a USB 3.1 / USB 3.2 Gen 1 port.
- Suitable for type 2.5 Serial ATA HDD/SSD
- Compatible with SATA 6.0 Gbit/s
- Supports transfer rates up to 5.0 Gbps
- Connection to Computer: USB Type A
- Connection to hard disk: 15-pin SATA power + 7-pin SATA data
- Hot-swap capable, Plug & Play
- Length USB cable: 0.15 m

Note: According to the current specifications of USB.org we have adapted the technical data of our USB 3 products. The new designation for the already known USB specifications has been changed to USB 3.2 Gen 1 (formerly USB 3.0 / USB 3.1 Gen 1) and USB 3.2 Gen 2 (formerly USB 3.1 / USB 3.1 Gen 2).

- Contents:

Adapter, manual





	Order-No.	P.U.
VALUE USB 3.2 Gen 1 to SATA 6 Gbit/s Adapter	12.99.1052	10

VALUE USB3.2 Gen1 to SATA 6.0 Gbit/s Adapter

- Easy way to connect a SATA 6.0 Gbit/s hard disk to a computer or notebook over a SuperSpeed USB 3.0 port
- Suitable for type 2.5/3.5 Serial ATA HDD/SSD
- Compliant with USB 3.0, USB 2.0, USB 1.1
- Compliant with SATA 6.0 Gbit/s, SATA 3.0 Gbit/s, SATA 1.5 Gbit/s
- Supports transfer rates of up to 5.0 Gbit/s
- Connection to computer: USB 3.0
- Connection to HDD: 15-pin SATA power + 7-pin SATA data
- Hot-swappable, plug & play
- Length USB cable: 1.20 m
- Power supply included
- Supported Operating Systems: 2000/XP/Vista/7/8
- Contents: Adapter, power supply, manual



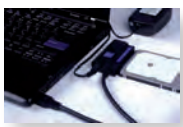

	Order-No.	P.U.
VALUE USB3.2 Gen1 to SATA 6 Gbit/s Adapter, 1.2 m	12.99.1049	10

ROLINE USB3.2 Gen1 to SATA 6Gbit/s Adapter

- Easy way to connect a SATA 6.0 Gbit/s hard disk to a computer or notebook over a SuperSpeed USB 3.0 port
- Suitable for type 2.5/3.5 Serial ATA HDD/SSD
- Compliant with USB 3.0, USB 2.0, USB 1.1
- Compliant with SATA 6.0 Gbit/s, SATA 3.0 Gbit/s, SATA 1.5 Gbit/s
- Supports transfer rates of up to 5.0 Gbit/s
- Connection to computer: USB 3.0
- Connection to HDD: 15-pin SATA power + 7-pin SATA data
- Hot-swappable, plug & play
- Length USB cable: 0.15 m
- Supported Operating Systems: 2000/XP/Vista/7/8
- Contents: Adapter, manual







	Order-No.	P.U.
ROLINE USB3.2 Gen1 to SATA 6 Gbit/s Adapter, 0.15 m	12.02.1043	10

VALUE USB 3.2 Gen 2 to SATA 6.0 Gbit/s Adapter

The simple way to connect a SATA III 6.0 Gbit/s hard drive to a computer or notebook via USB 3.1 Type C.

- Easy way to connect a SATA 6.0 Gbit/s hard disk to a computer or notebook over a SuperSpeed USB 3.1 port
- Suitable for type 2.5/3.5 Serial ATA HDD/SSD
- Compliant with USB 3.0, USB 2.0
- Compliant with SATA 6.0 Gbit/s, SATA 3.0 Gbit/s, SATA 1.5 Gbit/s
- Supports transfer rates of up to 5.0 Gbit/s
- Connection to computer: USB 3.1
- Connection to HDD: 15-pin SATA power + 7-pin SATA data
- Additional Micro USB B connection for power supply (if needed)
- Hot-swappable, Plug & Play
- Length USB cable: 0.15 m
- Supported Operating Systems: 2000/XP/Vista/7/8/10
- Contents:Adapter, manual



	Order-No. – P.U.
VALUE USB 3.2 Gen 2 to SATA 6.0 Gbit/s Adapter, 1 m	12.99.1051 – 10

ROLINE Converter Cable USB Type C to SATA (7+15pin)

Quick solution for the use of HDD/SSDs in combination with Macbooks, Ultrabooks, Notebooks / Laptops or PCs with USB Type C interface. Supports a maximum data transmission rate of up to 6Gbit/s!

- Full compliance with USB 3.1 Gen 1, USB 2.0, USB 1.1
- Connect your SATA connector directly to a SATA SSD/HDD, without any accessories
- Portable adaptercable, easy to use without any needed accessories
- Data transfer rate of up to 6Gbit/s
- Supports SATA I / II / III
- Connections: 1x USB Type C, 1x SATA III (7+15) connector
- Supported Operating Systems: Windows 7 / 8 / 10, Mac OS X
- Contents:Converter cable, adapter DB9 F-DB25 M, driver CD



	Order-No. – P.U.
ROLINE Converter Cable USB Type C to SATA (7+15pin)	12.02.1162 – 10

VALUE Converter Cable USB Type C to Serial

NEW

Quick solution for the use of peripheral devices with serial interfaces (e.g. modems, digital cameras, printers) with notebooks or computers with USB interface using a USB Type C connector

- Full compliance with USB 2.0, USB 1.1
- Data transfer rate of over 1Mbit/s
- Supports RS232 serial interface
- Supports automatic handshake mode
- Supports remote wakeup and power management
- Power Mode: Bus-powered
- Connections: 1x USB Type C, 1x DB 9-pin connector, 1x DB 25-pin connector
- Supported Operating Systems: Windows 98, 2000, XP, Vista, Win 7 / 8 / 10, Mac OS X
- Contents: Converter cable, adapter DB9 F-DB25 M





	Order-No. – P.U.
VALUE Converter Cable USB Type C to Serial, black, 1.8 m	12.99.1162 – 10

ROLINE Converter Cable USB Type C to Serial

Quick solution for the use of peripheral devices with serial interfaces (e.g. modems, printers) with notebooks or computers with USB interface using a USB Type C connector

- Full compliance with USB 2.0, USB 1.1
- Data transfer rate of over 1Mbit/s
- Supports RS-232 serial interface
- Supports automatic handshake mode
- Supports remote wakeup and power management
- Power Mode: Bus-powered
- Connections: 1x USB Type C, 1x DB 9-pin connector
- Supported Operating Systems: Windows 98, 2000, XP, Vista, Win 7 / 8 / 10, Mac OS X
- Contents: Converter cable, adapter DB9 F-DB25 M, driver CD





	Order-No. – P.U.
ROLINE Converter Cable USB Type C to Serial, black, 1.8 m	12.02.1161 – 10

VALUE Converter Cable USB to Serial

- Quick solution for the use of peripheral devices with serial interfaces (e.g. modems, digital cameras, printers) with notebooks or computers with USB interface
- Data transfer rate of over 1Mbit/s
- Connections: 1x USB Type A, 1x DB 9-pin connector
- Equivalent to the USB 1.1 specification
- Length: 1.8 m
- Contents: Converter cable, adapter DB9 F-DB25 M, driver CD



	Order-No. – P.U.
VALUE Converter Cable USB to Serial, turquoise, 1.8 m	12.99.1160 – 10

ROLINE Converter Cable USB to Serial

With this converter you can easily connect peripheral devices, such as analogue and ISDN modems, digital cameras and handheld computers, which have a serial interface to an USB environment

- Easy installation
- True plug & play
- Supports automatic handshake mode
- Supports remote wake up and power management
- Needs no interrupt (IRQ)
- Length: 1.8 m
- Supported operating systems: Windows 98SE/ME/2000/XP/7/8 /10
- Contents: Converter cable, driver CD, manual



roline®
Designed for Professionals

	Order-No. – P.U.
ROLINE Converter Cable USB to Serial, 1.8 m	12.02.1160 – 10

ROLINE Converter Cable USB to RS-232+DB25

- Ideal for notebooks that nowadays only offer USB interfaces
- To connect one serial device (e. g. modem) and one parallel device (e. g. printer) to the USB port of a PC or notebook
- No external power supply needed
- Supported operating systems: Windows 2000/XP/Vista/7
- Contents:Converter, driver CD, manual

roline®
Designed for Professionals



	Order-No. – P.U.
ROLINE Converter Cable USB to RS-232+DB25	12.02.1049 – 20

ROLINE Opto Bridge USB-USB

This small, industrial - grade isolator is very easy to use and provides a high-voltage barrier protection against surges, noise and ground loop errors. Suitable for use in sensitive applications like automotive measurements.

- Effective protection of the USB interface through galvanic isolation (opto-coupler)
- Isolates a USB device galvanically from the USB host
- Insulation voltage max. 5000V eff.
- LED indicators
- Data transfer rate: max. 12MBit/s, USB 2.0 compatible
- Connections: USB A connector and USB A plug cable

- Optional: External power supply 19.11.1097 (500mA), e.g. for powering larger hard disks (3.5“ HDDs)



roline®
Designed for Professionals



	Order-No. – P.U.
ROLINE Opto Bridge USB-USB	12.02.1091 – 30

ROLINE USB to 4x RS232 Converter

Allows the connection of four serial devices (e. g. a modem or printer) via the USB port of a PC or notebook - the four differently colored RS232 connectors help to provide a clear differentiation.

- Converts one PC USB Port into four serial ports
- Supports data transfer rates of up to 1Mbit/s
- No external power supply is needed
- Supported operating systems: Windows 2000/XP/Vista/7
- Contents: Converter, driver CD, manual



roline®
Designed for Professionals

	Order-No. – P.U.
ROLINE USB to 4x RS232 Converter	12.02.1016 – 5

ROLINE USB 2.0 to RS232 Adapter, for DIN Rail

Converter to connect serial devices to a USB port on your PC
- Compatible with USB 2.0, USB 1.1, USB 1.0
- Data transfer rate of up to 115 Kbit/s
- 15 kV ESD protection for all RS232 ports
- Connectors: 1x DB9 Male, 1x Mini USB type B
- For DIN Rail mounting
- Windows 98SE/ME/2000/Server 2003/XP/Server 2008/XP/Vista/7
- Power supply over Mini USB type B connector (40mA)
- Contents: Converter, driver CD, manual



roline®
Designed for Professionals

	Order-No. – P.U.
ROLINE USB 2.0 to RS232 Adapter, for DIN Rail, 1 Port	12.02.1001 – 4
ROLINE USB 2.0 to RS232 Adapter, for DIN Rail, 4 Ports	12.02.1003 – 4
ROLINE USB 2.0 to RS232 Adapter, with Isolation, for DIN Rail, 1 Port	12.02.1007 – 2

ROLINE USB 2.0 to RS422/485 Adapter, with Isolation, for DIN Rail

- Converter to connect serial devices to a USB port on your PC
- Mode: Asynchronous serial communication
- Compatible with USB 2.0, USB 1.1, USB 1.0
- Isolation 3000 VDC (optical)
- Connectors: 5-pin terminal block, 1x Mini USB type B
- Data transfer rate of up to 115 Kbit/s
- Terminal resistance and Echo mode
- DIP switches for terminal settings
- Signals: TX+, TX-, RX+, RX-, SGND
- Protection: 15 KV ESD protection for all signals, RS-422/485 signals surge protection
- Status LEDs
- For DIN rail mounting
- Power supply over Mini USB type B connector (54 mA)
- Windows 98SE/ME/2000/Server 2003/XP/Server 2008/XP/Vista/7
- Contents: Converter, USB cable, driver CD, manual

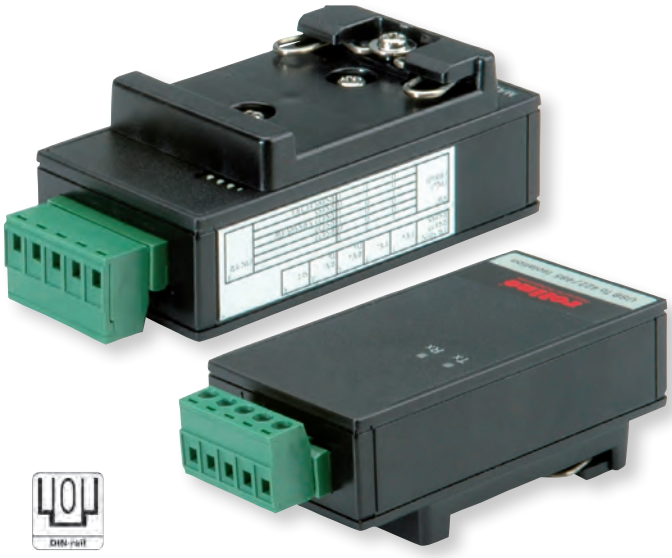

roline®
Designed for Professionals

	Order-No. – P.U.
ROLINE USB 2.0 to RS422/485 Adapter, with Isolation, for DIN Rail	12.02.1004 – 4

Converter RS232-RS485, without or with Galvanic Isolation

- DCE/DTE adjustable
- Full duplex transfer over 4 lines
- Only the data lines are converted
- 25 pin socket on the RS232 side
- Power supply via mains adapter
- Robust plastic casing
- Contents: converter, power cupply unit (9V DC, 300mA), manual

Technical data:

RS-232 connection:	D-Sub 25-pin F
RS-485 connection:	Terminal block (4 clamps)
Data transfer rate:	Up to ca. 100 Kbit/s
Transfer distance:	Up to ca. 1 km
Power supply:	DC 9V, 200mA
Weight:	60 g
Dimensions (WxDxH):	74.5 x 54 x 18.5 mm



	Order-No. – P.U.
Converter RS232-RS485, without Galvanic Isolation	12.02.1028 – 20
Converter RS232-RS485, with Galvanic Isolation	12.02.1029 – 10

roline® Designed for Professionals

VALUE RS232 Optical Coupler

To connect serial devices to a RS232 port on your PC with electrical isolation

- Data transfer rate of up to 56.25 kbit/s
- 2.5 kV ESD protection for RS232 ports
- With galvanic isolation
- Easy to connect, no configuration, no power supply
- Connectors: 1x DB9 Male, 1x DB9 Female
- Contents: Coupler, manual

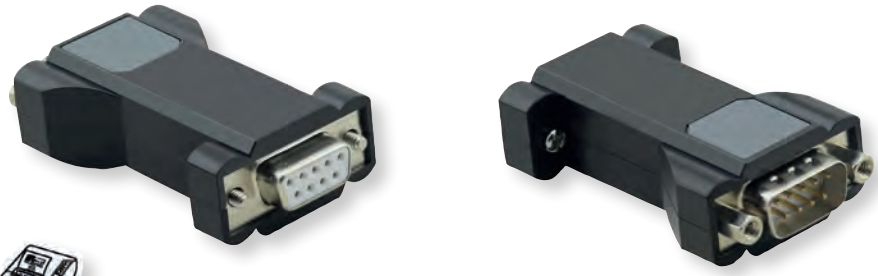

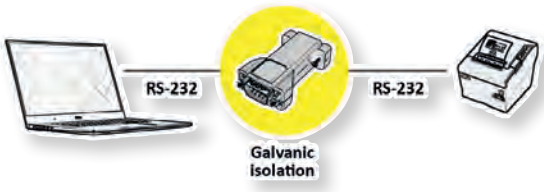

	Order-No. – P.U.
VALUE RS232 Optical Coupler	12.99.1016 – 30

Value®

ROLINE Converter RS232 to RS422/485, with Isolation, for DIN Rail

- Converts RS232 signals to RS-422 or RS-485
- Fully compliant with PC serial COM ports
- Isolation 3000 VDC (optical)
- Connectors: RS232: DB9 Female, RS-422/485: 7-pin terminal block
- Auto toggling by hardware
- Data transfer rate of up to 115.2 Kbit/s
- Terminal resistance and Echo mode
- DIP switches for terminal settings
- Signals: TXD, RXD, RTS, CTS, GND for RS232
- Protection: 15 KV ESD protection for all signals, RS-422/485 signals surge protection
- Status LEDs
- For DIN rail mounting
- DC power supply 10~30 V (built-in surge protector)
- Hardware solution, no software required

Environmental Limits:
Operating Temperature:-30° ~ 75°C
Storage Temperature:-40° ~ 85°C
Ambient Relative Humidity: 5 ~ 95%
Non-Condensing

- Contents: converter, manual



	Order-No. – P.U.
ROLINE Converter RS232 to RS422/485, with Isolation, for DIN Rail	12.02.1005 – 4
ROLINE RS232 to RS-422/485 Converter, Din Rail, self powered	12.02.1008 – 4

roline® Designed for Professionals



Peripheral Devices

4

I/O Cards 4.02
Card Readers 4.03
HDD Docking Station 4.03
HDD Enclosures 4.03, 4.04
Mouses 4.04
Mouspads 4.04
Mounting Material 4.05
19” Industrial Server Chassis 4.05, 4.06

VALUE I/O Cards

Upgrade your PC with additional interfaces like e.g. USB 2.0, USB 3.0, USB 3.1, Serial ATA and EPP/ECP parallel resp. RS232 serial ports.

- PCI adapters
- PCI-Express adapters
- Contents: Adapter, driver CD, manual

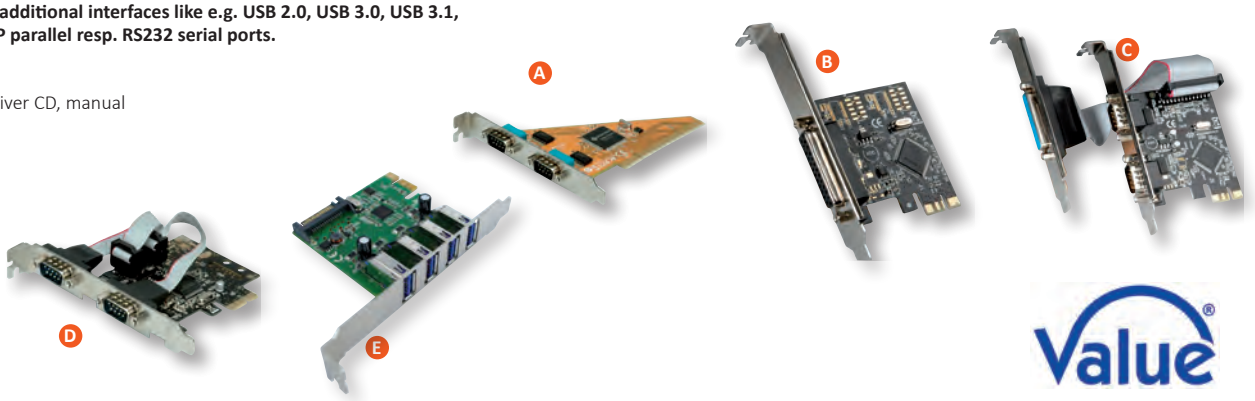

	Picture	Interfaces	Connectors	Card type	Order-No.	– P.U.
VALUE PCI Adapter, 2x Serial RS232, D-Sub 9 Port	A	COM 1-256	2x DB9 M external	PCI	15.99.2086	– 20
VALUE PCI-Express Adapter, 1x Parallel ECP/EPP Port	B	LPT 1-3	1x DB25 F external	PCI-Express x1	15.99.2114	– 10
VALUE PCI-Express Adapter, 2x Serial RS232 D-Sub 9 + 1x Parallel EPP/ECP Ports	C	COM 1-256, LPT 1-3	2x DB9 M/1x DB25 F	PCI-Express x1	15.99.2116	– 10
VALUE PCI-Express Adapter, 2x Serial RS232 D-Sub 9 Ports	D	COM 1-256	2x DB9 M	PCI-Express x1	15.99.2118	– 10
VALUE PCI-Express Adapter, 4x USB 3.0, 5 Gbit/s	E	USB 3.0	4x USB 3.0 Type A F	PCI-Express x1	15.99.2115	– 5

ROLINE PCIe 3.0 x4 3.3V5A Host Adapter for PCIe-NVMe M.2 110mm SSD

- PCIe 3.0 x4 NVMe and PCIe-AHCI M.2 SSD work in main board PCIe x4 bus slot
- PCI Express 3.0 x4 Lane Host adapter
- Supports PCIe Gen3 and PCIe Gen2 M.2 NGFF 110mm, 80mm, 60mm, 42mm SSD
- M.2 NGFF type 22110-D5-M connector on board
- Movable M.2 NGFF stand-off and multiple plated-holes supports type 22110, 2280, 2260 and 2242 SSD
- Supports PCIe 3.0, PCIe 2.0 motherboard
- Supports dual-sided SSD module 1.5mm component height on the top and bottom side
- Compliant with PCI Express 3.0
- Pin header on board for drive LED connection
- Low Profile PCIe Form Factor
- Low Profile PCIe bracket on board and Regular size bracket included
- Transparent to the operating system and no board driver required
- Operating system: Windows 10, Win8.1, Windows Server 2012 R2
- Supports M.2 PCIe SSD High Power 3.3V5A
- Contents: Adapter, driver CD, manual

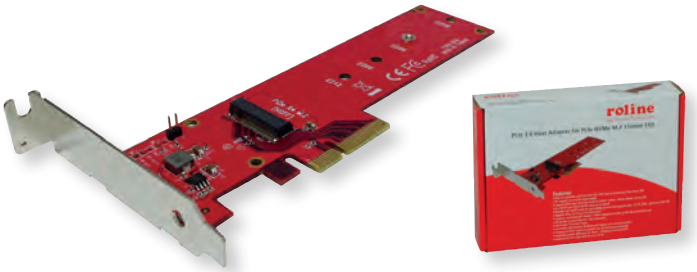

roline®
Designed for Professionals

	Order-No.	– P.U.
ROLINE PCIe 3.0 x4 3.3V5A Host Adapter for PCIe-NVMe M.2 110mm SSD	15.06.2193	– 10

ROLINE PCI-Express Adapter, 1x Port Type C USB 3.2 Gen 2x2

NEW

Expand your PC with one USB 3.2 Gen 2x2 port

- USB 3.2 Gen 2x2 PCIe x4 Lane Host Adapter
- USB 3.2 Gen 2x2 offers data transfer rates of up to 20 Gbit/s
- Connectors: 1x Type C downstream connector on board
- Compliant with Universal Serial Bus 3.2 Specification Revision 1.0
- Supports 5V3A USB bus power USB 3.1 Type C port
- Supports PCIe 3.0 motherboard
- Low profile PCI form factor
- Plug & Play
- Require an empty PCIe 3.0 slot in computer for USB3.2 Gen 2x2 full performance
- Supports Windows 10 / 32/64-bit
- Contents: Adapter, low profile bracket, manual

roline®
Designed for Professionals

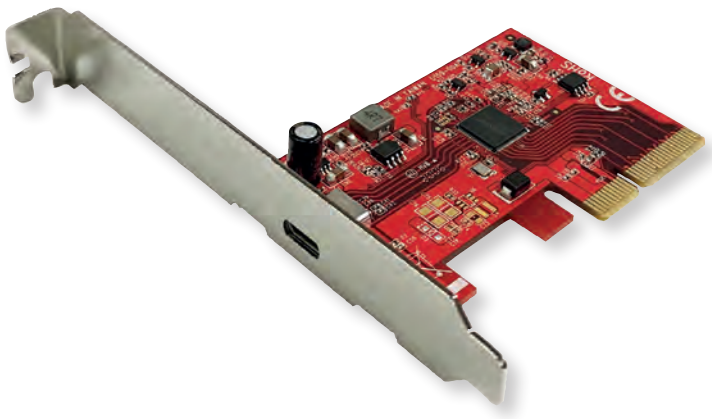

Note: According to the current specifications of USB.org we have adapted the technical data of our USB 3 products. The new designation for the already known USB specifications has been changed to USB 3.2 Gen 1 (formerly USB 3.0 / USB 3.1 Gen 1) and USB 3.2 Gen 2 (formerly USB 3.1 / USB 3.1 Gen 2).

	Order-No.	– P.U.
ROLINE PCI-Express Adapter, 1x Port Type C USB 3.2 Gen 2x2	15.06.2195	– 10

ROLINE M.2 to SATA III SSD H/W adapter, 2x M.2 NGFF SSD, bootable and RAID-capable

2.5-inch H/W adapter for the installation of two M. 2 SSDs (NGFF), bootable and RAID-compatible and with 6Gbit/s SATA connection!

- Supports two M. 2 NGFF SSDs with form factor 2230, 2242, 2260 and 2280
- M.2 NGFF SATA SSDs can be primary boot device and contain operating system and applications.
- RAID 0 and RAID 1 configurable via hardware or software; configuration on the hardware side via 6 pins with jumper (jumper table on the back of the board)
- The 2.5 inch H/W adapter can be installed in a 2.5“ housing and is therefore perfectly suited for mobile use.
- No drivers required
- Contents: HDD adapter

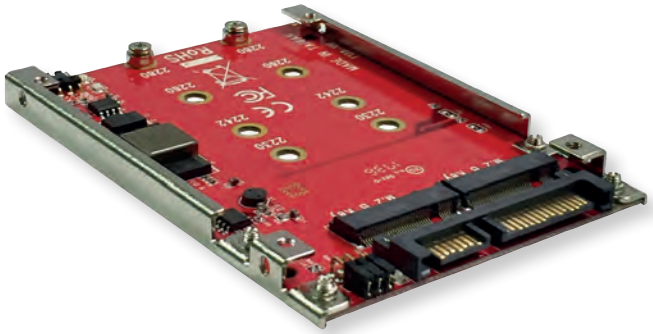

roline® Designed for Professionals

	Order-No. – P.U.
ROLINE M.2 to SATA III SSD H/W adapter, 2x M.2 NGFF SSD, bootable /RAID-capable	16.01.4145 – 10

ROLINE USB 3.2 Gen 1 Multi Card Reader, external

The external Multi Card Reader reads all important and common formats and offers the highest possible compatibility.

- Supports SuperSpeed USB 3.0, compliant with USB 2.0, USB 1.1
- Card Reader works with multiple media, as e.g. CF (Compact Flash) Card I/II, SD (Secure Digital) Card, SDHC, SDXC, MMC (MultiMedia Card), MS (Memory Stick), MS Pro, MS Duo, microSD and many variants
- Supports Extended Capacity SD memory cards (SDXC)
- No adapter required for Micro SD/M2 Cards
- Supported Operating Systems: Windows 2000/XP/Vista/7/8/10, Mac OS X
- Contents Card reader, USB 3.0 cable



roline® Designed for Professionals

	Order-No. – P.U.
ROLINE USB 3.2 Gen 1 Multi Card Reader, external	15.08.6248 – 10

VALUE External Type 2.5 SATA 6.0 Gbit/s HDD/SSD Enclosure with USB 3.2 Gen 1 Type C

Transparent empty housing for 2.5“ SSDs/HDDs, for connection via USB 3.1 / USB 3.2 Gen 2 Type C

- Portable Drive Enclosure with USB Type C connector
- Input Interface: SATA 6Gbit/s
- Output Interface: USB Type C
- Compatible: 2.5 SATA HDD/SSD
- Compliant with SuperSpeed USB 3.1 specification with data transfer rates of up to 5 Gbit/s
- Supports 2.5“ HDD/SSDs with SATA connection and height up to 9.5 mm
- Color: dark transparent
- Plug & play
- Housing: plastic
- Contents: HDD Enclosure, manual

Note: According to the current specifications of USB.org we have adapted the technical data of our USB 3 products. The new designation for the already known USB specifications has been changed to USB 3.2 Gen 1 (formerly USB 3.0 / USB 3.1 Gen 1) and USB 3.2 Gen 2 (formerly USB 3.1 / USB 3.1 Gen 2).

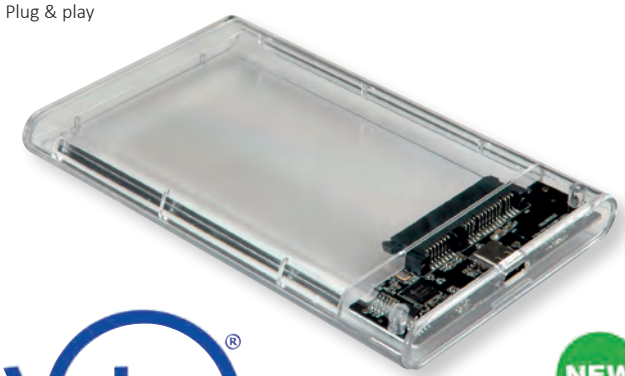

Value®

NEW

	Order-No. – P.U.
VALUE External Type 2.5 SATA 6.0 Gbit/s HDD/SSD Enclosure with USB 3.1 Gen 1 Type C	16.99.4214 – 10

ROLINE 2.5 + 3.5 SATA HDD Docking Station, USB3.0, HD Copy-Function

- Easy way to connect a SATA 6.0 Gbit/s hard disk to a computer or notebook over a SuperSpeed USB 3.0 port
- 2 SATA- HD can be copied directly, without Software
- Suitable for type 2.5/3.5 Serial ATA HDD/SSD (up to 4TB capacity)
- Compliant with USB 3.0, USB 2.0, USB 1.1
- Compliant with SATA 6.0 Gbit/s, SATA 3.0 Gbit/s, SATA 1.5 Gbit/s
- Supports transfer rates of up to 5.0 Gbit/s
- Connection to computer: USB 3.0
- Connection to HDD: 15-pin SATA power + 7-pin SATA data
- Hot-swappable, plug & play
- Length USB cable: 1 m
- Power supply included
- Supported Operating Systems: Windows XP/ Vista / 7 / 8 / (32 / 64-bit) / 10 / Mac OS X
- Contents: HDD Docking station, USB cable, power supply, manual

roline® Designed for Professionals



	Order-No. – P.U.
ROLINE 2.5 + 3.5 SATA HDD Docking Station, USB3.0, HD Copy-Function	16.01.4122 – 5

VALUE External Type M.2 NVMe SSD Enclosure with USB 3.2 Gen 2 Type C

Extra narrow empty housing made of matt aluminium for M.2 SSDs, for connection via USB 3.1 / USB 3.2 Gen 2 Type C

- Empty housing for M.2 SSDs with USB Type C connector
- External interface: USB type C
- Compatible with USB 3.1 / USB 3.2 Gen 2 with data transfer rates up to 10 Gbps
- Supports M.2 SSDs 2242, 2260, 2280
- Suitable M- keyed M.2 NVMe SSD
- Matt, silver aluminium housing

Note: According to the current specifications of USB.org we have adapted the technical data of our USB 3 products. The new designation for the already known USB specifications has been changed to USB 3.2 Gen 1 (formerly USB 3.0 / USB 3.1 Gen 1) and USB 3.2 Gen 2 (formerly USB 3.1 / USB 3.1 Gen 2).

- Contents: M.2 SSD Enclosure, manual, USB Type C cable



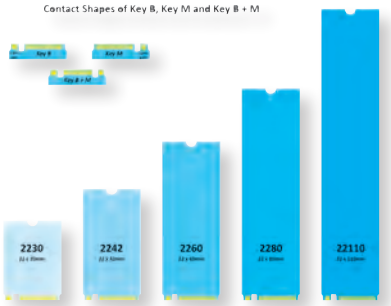

Value®

	Order-No. – P.U.
VALUE External Type M.2 NVMe SSD Enclosure with USB 3.2 Gen 2 Type C	16.99.4131 – 5

ROLINE External Type M.2 NVMe SSD Enclosure with USB 3.2 Gen 2 Type C

Extra narrow empty housing made of matt aluminium for M.2 SSDs, for connection via USB 3.1 / USB 3.2 Gen 2 Type C

- Make your PCI-e Based M-Key M.2 NVMe SSD portable for data store or data transfer via USB C Port on your computer
- Supports PCIe Gen3 M.2 80mm, 60mm, 42mm NVMe SSD
- M.2 NGFF type 2280-D5-M M Key socket on board
- Supports dual-sided SSD module 1.5mm maximum component height on the top and bottom side
- Compliant with NVM Express 1.3
- Compliant with USB 3.1 Gen.1 / 2 specification
- Compliant with USB Attached SCSI Protocol (UASP) Specification (Rev. 4)
- Supports USB2.0/USB 3.1 Gen1/ Gen2 power saving mode
- Data transmission: up to 10 Gbit/s
- PCBA and NVMe SSD powered by USB3.1 Type-C bus 5V
- **REMARK Note: aluminum case only with PCBA, WITHOUT NVMe M.2 SSD inside**
- Content: 1x enclosure, 1x USB C cable (M/M), screws

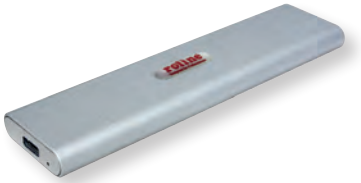



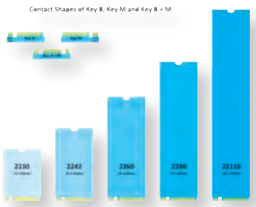

roline®
Designed for Professionals

	Order-No. – P.U.
ROLINE External Type M.2 NVMe SSD Enclosure with USB 3.2 Gen 2 Type C	16.01.4146 – 10

ROLINE External Type M.2 NVMe SSD Enclosure with USB 3.2 Gen 2x2 Type C

Empty housing made of matt aluminium for M.2 SSDs, for connection via USB 3.1 / USB 3.2 Gen 2 Type C

- Empty housing for M.2 SSDs with USB Type C connector
- External interface: USB type C
- **Compatible with USB 3.1 / USB 3.2 Gen 2x2 with data transfer rates up to 20 Gbps**
- Supports M.2 SSDs 2230, 2242, 2260, 2280 (M key)
- Matt, silver aluminium housing

Note: According to the current specifications of USB.org we have adapted the technical data of our USB 3 products. The new designation for the already known USB specifications has been changed to USB 3.2 Gen 1 (formerly USB 3.0 / USB 3.1 Gen 1) and USB 3.2 Gen 2 (formerly USB 3.1 / USB 3.1 Gen 2).

- Contents: M.2 SSD Enclosure, manual, USB Type C cable
- **REMARK: the shown M.2 NVMe SSD is not included in the scope of delivery**





roline®
Designed for Professionals

	Order-No. – P.U.
ROLINE External Type M.2 NVMe SSD Enclosure with USB 3.2 Gen 2x2 Type C	16.01.4147 – 10

ROLINE Mouse, optical, USB

- Super high sensitive 1600/1200/800 cpi (switchable)
- USB connector
- Surface: Red rubber coating
- Suitable for right and left-handed users
- Supported Operating Systems: Windows 2000/XP/Vista/7/10
- Contents: Mouse





roline®
Designed for Professionals

		Order-No. – P.U.
ROLINE Mouse, optical, USB, red/black	A	18.01.1082 – 10
ROLINE Mouse, optical, cordless, USB, red/black	B	18.01.1087 – 10

ROLINE Notebook Combo Mousepad (280x160x0.5mm)

Perfect fit between most Macbooks, Ultrabooks, Notebooks/Laptops - suitable for cleaning your display/device, as a mousepad and to protect the Notebook keyboard from dirt and dust!

- Designed for professional gamers and office environments
- Provides excellent gliding of the mouse
- Natural rubber base for maximum grip on any surface
- Excellent performance for laser and optical mice
- Material: Surface: high performance textile surface / Base: nature rubber
- Colour: Black



roline®
Designed for Professionals

	Order-No. – P.U.
ROLINE Notebook Combo Mousepad (280x160x0.5mm), black	18.01.2047 – 20

HDD Mounting Adapter Type 3.5/2.5

16.01.3031:
This hard disk mounting adapter serves for installation of type 2.5 hard disks into a free type 3.5 slot
- For installation of type 2.5 hard disks in a type 3.5 slot
- Nickel plated
- Contents: 2 brackets, screws

16.01.3028:
- This hard disk mounting adapter serves for installation of type 3.5 hard disks into a free type 5.25 slot
- Nickel plated
- Contents: 2 brackets, screws

16.01.3006:
- For installation of type 3.5 enclosures (e. g. floppy drives) in an (open) type 5.25 slot
- Solid ABS-plasic, black
- Screws included

16.01.3007:
- For the installation of up to two type 2.5 HDDs into any type 3.5 drive bay of a computer case
- Solid plastic, black
- Screws included

16.01.3008/16.01.3009/16.01.3010:
- For installation of 2.5 inch HDDs/SSDs in a 3.5 inch mounting bay
- Sturdy, black metal frame
- Mounting screws included in scope of delivery
- Contents: Frame, Mounting Screws

REMARK: HDD/SSD are not included

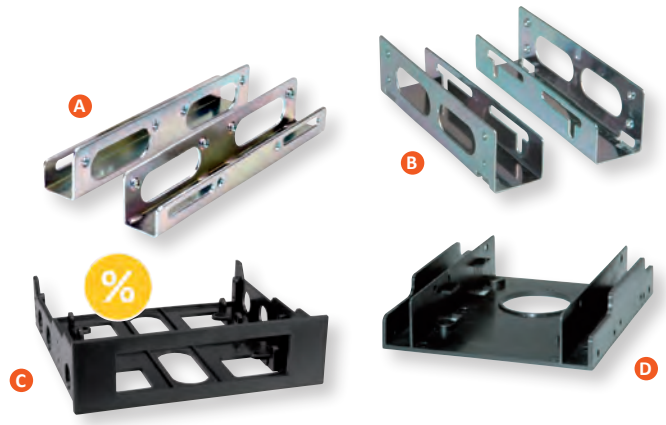

16.01.3008



16.01.3009

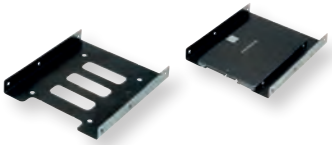

16.01.3010



		Order-No.	– P.U.
HDD Mounting Adapter Type 3.5/2.5	A	16.01.3031	– 25
HDD Mounting Adapter, Type 3.5/5.25	B	16.01.3028	– 50
Floppy Mounting Adapter Frame, Type 3.5/5.25, black	C	16.01.3006	– 40
HDD Mounting Adapter Type 3.5 for 2x Type 2.5 HDDs, black	D	16.01.3007	– 20

	Order-No.	– P.U.
HDD/SSD Mounting Adapter, 3.5 inch frame for 2x 2.5 inch HDD/SSD, metal	16.01.3008	– 25
HDD/SSD Mounting Adapter, 3.5 inch frame for 1x 2.5 inch HDD/SSD, metal	16.01.3009	– 25
HDD/SSD Mounting Adapter, 5.25 inch frame for 1x 2.5/3.5 inch HDD/SSD, metal	16.01.3010	– 25

roline®
Designed for Professionals

VALUE 19“ Industrial Rack-Mount Server Chassis, 1UH

DATA CENTER Product

- Versatile 1U 19“ industrial PC housing
- Rugged construction and design for harsh industrial environment
- Supports ITX motherboard
- Max Mainboard Size:. 170 x 170 mm
- 4 x 4 cm ball bearing fan on the front for a better ventilation
- Space for optional 1x 3.5 or 2x 2.5 HDD
- Space for installation of an FLEX-ATX power supply (not included in delivery)
- Buttons: Controls Power-Button / Reset-Button
- LED: Power / HDD Activity / Network Activity / Overheating Alert / Power Failure
- Front connectors: 1x USB2.0, 1x USB3.0
- Color: Black
- Contents:Casing, screws





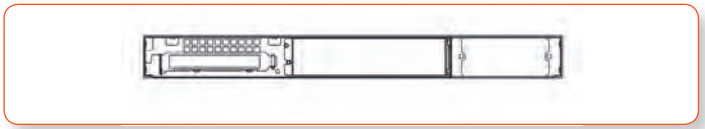

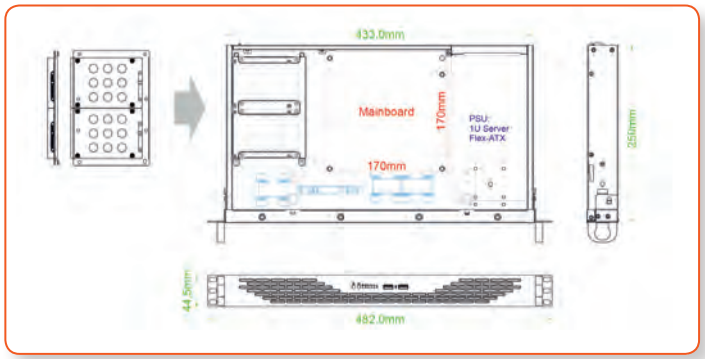

Value®

	Order-No.	– P.U.
VALUE 19“ Industrial Rack-Mount Server Chassis, 1UH, black	19.99.0115	– 1

VALUE 19“ Industrial Rack-Mount Server Chassis, 4UH

DATA CENTER Product

- Versatile 4U 19“ industrial PC housing
- Rugged construction and design for harsh industrial environment
- 4UH rack with a long installation depth (650mm)
- Supports ATX / (eATX) / Baby AT motherboard
- Max Mainboard Size:. 305 x 345 mm (12“ x 13.5“)
- Provides enough space for HDD disks (up to 11x 3.5“ HDDs)
- Mounting rails for screw less installation of internal 3.5“ and external 5.25“ drives (included)
- Seven fans are preinstalled, which allows an optimal cooling of the installed hardware (5x 120x120mm; 2x 80x80mm)
- Embedded dust filter, which can be removed for cleaning, is located behind the lockable front door and prevents both removable HDD cages from dust
- 2x front USB ports (1x USB 2.0 and 1x USB 3.0)
- Space for installation of an ATX power supply (not included in delivery)
- Contents: Casing, keys, screw set, mounting frame for mini redundant power supply, wrench for assembly of the spacer, mounting rails for 5.25“ and 3.5“ drives













	Order-No. – P.U.
VALUE 19“ Industrial Rack-Mount Server Chassis, 4UH, black	19.99.0116 – 1
VALUE Telescopic rails for VALUE Industrial Rack-Mount Server Chassis, 19990116	19.99.0117 – 1

VALUE 19“ Industrial Rack-Mount Server Chassis , 4UH

DATA CENTER Product

- Versatile 4U 19“ industrial PC housing
- Rugged construction and design for harsh industrial environment
- Supports ATX/Baby AT motherboard
- Hold-Down clamp design to protect plug-in cards from vibration
- Shock resistant drive bracket exposed
- A lockable front door for dust-proof integrity and running security
- 12x12 cm ball bearing fan with replaceable air filter on the front for a better ventilation, rear space for the installation of two fans à 80x80 mm
- Space for installation of an ATX power supply (not included in delivery)
- Max Mainboard Size:. 305x270 mm (12“ x 10,6“)
- Color: Black
- Optional accessories: Telescope rail 19.99.0114
- Contents: Casing, screws





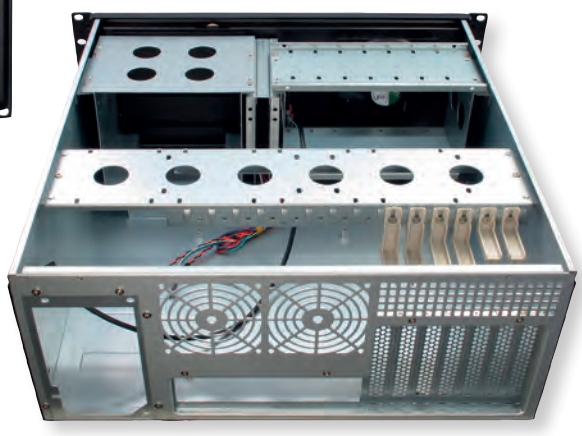

Technical Data:

Type 5.25 slots:	3
Type 3.5 slots:	8x int. (HDD),
Dimensions (WxLxH):	178 x 480 x 485/530*mm
Weight:	10 kg
Connectors front:	2x USB 2.0
Fan front:	120 mm

*) with holder

	Order-No. – P.U.
VALUE 19“ Industrial Rack-Mount Server Chassis STD, black	19.99.0104 – 1
VALUE Telescopic rails for VALUE Ind. Rack-Mount Server Chassis, 510-820 mm	19.99.0114 – 1



Mobile Computing

5

Fast- / Gigabit Ethernet Converter / Hub 5.02
Sync- & Charging Adapters 5.03
Sync- & Charging Cables . . . . . 5.04 – 5.05
USB Hubs 5.06
Docking Stations . . . . . 5.06 – 5.13
3.5mm Audio Adapters 5.14, 5.15
USB Charger . . . . . 5.16 – 5.18
Stand / Holder for Tablet 5.16
Security Locks 5.16
Charging Station 5.17
Wireless Charging 5.18

VALUE / ROLINE USB to Fast / Gigabit Ethernet Converter

These converters are a cost effective solution to convert a USB port into a Fast- or Gigabit Ethernet port

- Easy installation- just plug the converter into the USB port, connect the LAN cable- done!
- Bus Powered- no external power supply required
- Supports 10/100/1000 Mbit/s auto-sensing capability in Gigabit Ethernet
- Supports both full-duplex and half-duplex operation in Gigabit Ethernet

Value®

roline®
Designed for Professionals

Ethernet continues to be the most used network interface as the standard evolves to meet the massive data bandwidth requirements of different markets.
Due to the upward trend in data traffic, new Ethernet rates have been developed to alleviate the traffic bottlenecks created by the data explosion, therefore the 2.5 Gigabit Ethernet standard was designed to bridge the copper-twisted-pair gap between Gigabit Ethernet and 10 Gigabit Ethernet.

12.99.1105



12.02.1106



12.99.1107



12.99.1116



12.02.1107



12.02.1108



12.02.1109



12.99.1115





12.02.1110



12.02.1111



2.5 Gbit/s - 12.02.1103

Brand	Description	USB Compliant	Network Connection	USB Type	Color	Supported OS	Hub Function	Item Number	PU
VALUE	USB to Fast Ethernet Converter	USB 2.0	Fast Ethernet	A	black	Win XP / 7 / 8 / 10, Mac OS X		12.99.1107	– 10
VALUE	USB to Gigabit Ethernet Converter	USB 3.2 Gen 1	Gigabit Ethernet	A	black	Win XP / 7 / 8 / 10, Mac OS X		12.99.1105	– 10
VALUE	USB to Gigabit Ethernet Converter	USB 3.2 Gen 2	Gigabit Ethernet	C	black	Win XP / 7 / 8 / 10, Mac OS X		12.99.1115	– 10
VALUE	USB to Gigabit Ethernet Converter + 3x Hub	USB 3.2 Gen 1	Gigabit Ethernet	A	black	Win XP / 7 / 8 / 10, Mac OS X	3x USB A	12.99.1116	– 10
ROLINE	USB to Gigabit Ethernet Converter	USB 3.2 Gen 1	Gigabit Ethernet	A	black	Win XP / 7 / 8 / 10, Mac OS X		12.02.1106	– 10
ROLINE	USB to Gigabit Ethernet Converter + 3x Hub	USB 3.2 Gen 1	Gigabit Ethernet	A	black	Win XP / 7 / 8 / 10, Mac OS X	3x USB A	12.02.1107	– 5
ROLINE	USB to Gigabit Ethernet Converter + 3x Hub	USB 3.2 Gen 1	Gigabit Ethernet	C	black	Win XP / 7 / 8 / 10, Mac OS X	3x USB A	12.02.1108	– 10
ROLINE	USB to Gigabit Ethernet Converter	USB 3.2 Gen 2	Gigabit Ethernet	C	white	Win XP / 7 / 8 / 10, Mac OS X		12.02.1109	– 10
ROLINE	USB to Gigabit Ethernet Converter	USB 3.2 Gen 2	Gigabit Ethernet	C	silver	Win XP / 7 / 8 / 10, Mac OS X		12.02.1110	– 10
ROLINE	GOLD USB to Gigabit Ethernet Converter	USB 3.2 Gen 2	Gigabit Ethernet	C	golden	Win XP / 7 / 8 / 10, Mac OS X		12.02.1111	– 10
ROLINE	USB to 2.5 Gigabit Ethernet Adapter	USB 3.2 Gen 2	2.5 Gigabit Ethernet	C	black	Win XP / 7 / 8 / 10, Mac OS X		12.02.1103	– 5

VALUE / ROLINE USB Adapters

Use these adapters/cableadapters to easily connect your smartphone or tablet with USB Micro B with a charger or other suitable devices, like MacBooks, Ultrabooks, Notebooks/Laptops or PCs

• Colour: black /white

Note: According to the current specifications of USB.org we have adapted the technical data of our USB 3 products. The new designation for the already known USB specifications has been changed to USB 3.2 Gen 1 (formerly USB 3.0 / USB 3.1 Gen 1) and USB 3.2 Gen 2 (formerly USB 3.1 / USB 3.1 Gen 2).

roline® Designed for Professionals

Value®



12.99.3192 **12.03.2995** **12.99.3191** **12.99.2997** **12.99.9030**



12.99.2996 / 12.03.2996 **12.99.2998** **12.03.2997** **12.99.3190** **11.99.9030**



11.02.9030 **11.02.9031** **11.02.9015** **11.02.9005** **12.99.2995**

Brand	Order-No. – P.U.	Adapter / Cableaadapter	Compliant	Type	Connector	Functionality	Length	Color
VALUE	12.99.3192 – 25	Adapter	USB 2.0	Micro B - C	M/F		–	black
ROLINE	12.03.2995 – 10	Adapter	USB 3.2 Gen 1	A - C	M/F		–	black
VALUE	12.99.3191 – 25	Adapter	USB 2.0	C - Micro B	M/F		–	black
VALUE	12.99.2997 – 20	Gender Changer	USB 3.2 Gen 1	A - A	F/F		–	black
VALUE	12.99.9030 – 25	Adapter	USB 3.2 Gen 1	C - A	M/F	OTG	–	black
VALUE	12.99.2996 – 25	Adapter	USB 3.2 Gen 2	C - C	M/F, 90°		–	black
ROLINE	12.03.2996 – 10	Adapter	USB 3.2 Gen 2	C - C	M/F, 90°		–	white
VALUE	12.99.2998 – 10	Adapter	USB 3.2 Gen 1	A - C	M/F		–	black
ROLINE	12.03.2997 – 10	Adapter	USB 3.2 Gen 1	A - C	F/M		–	black
VALUE	12.99.3190 – 10	Adapter	USB 2.0	C - Micro B	M/F	OTG	–	black
VALUE	11.99.9030 – 25	Cableadapter	USB 3.2 Gen 1	C - A	M/F	OTG	0.15 m	black
ROLINE	11.02.9030 – 10	Cable	USB 3.2 Gen 1	C - A	M/F	OTG	0.15 m	black
ROLINE	11.02.9031 – 10	Cableadapter	USB	C - A	M/F	OTG	0.15 m	black
ROLINE	11.02.9015 – 10	Cable	USB 3.2 Gen 2	C - C	M/F		0.15 m	black
ROLINE	11.02.9005 – 20	Cable	USB 3.2 Gen 1	C - Micro B	M/M		0.5 m	black
ROLINE	11.02.9006 – 10	Cable	USB 3.2 Gen 1	C - Micro B	M/M		1 m	black
VALUE	12.99.2995 – 25	Adapter	USB 2.0	A - C	M/F		–	black

VALUE Lightning to USB Cable for iPhone, iPod, iPad

- Using 8 pins instead of 30, Lightning is significantly more compact than the 30-pin dock connector and can be inserted with either side facing up
- For the connection of devices like the iPhone on from the iPhone 5 that introduced the Lightning connector, as well as for iPods and iPads on from that generation
- This product is only made for devices with Lightning connector! It is NOT compatible with cables and peripherals designed for its predecessor, unless used with an adapter.
- High quality USB cable with one Type A (male) and one Lightning connector
- Improved shielding
- Meets standard USB 2.0 (transfer rate up to 480 Mbit/s)
- Colour: black





Value®

	Order-No. – P.U.
VALUE Lightning to USB Cable for iPhone, iPod, iPad, 0.15 m	11.99.8326 – 20
VALUE Lightning to USB Cable for iPhone, iPod, iPad, 1.0 m	11.99.8321 – 20
VALUE Lightning to USB Cable for iPhone, iPod, iPad, 1.8 m	11.99.8322 – 20

ROLINE Lightning to USB Cable for iPhone, iPod, iPad

- Using 8 pins instead of 30, Lightning is significantly more compact than the 30-pin dock connector and can be inserted with either side facing up
- For the connection of devices like the iPhone on from the iPhone 5 that introduced the Lightning connector, as well as for iPods and iPads on from that generation
- This product is only made for devices with Lightning connector! It is NOT compatible with cables and peripherals designed for its predecessor, unless used with an adapter.
- High quality USB cable with one Type A (male) and one Lightning connector
- Improved shielding
- Meets standard USB 2.0 (transfer rate up to 480 Mbit/s)
- Colour: white





roline®
Designed for Professionals

	Order-No. – P.U.
ROLINE Lightning to USB Cable for iPhone, iPod, iPad, white, 0.15 m	11.02.8326 – 20
ROLINE Lightning to USB Cable for iPhone, iPod, iPad, white, 1.0 m	11.02.8321 – 20
ROLINE Lightning to USB Cable for iPhone, iPod, iPad, white, 1.8 m	11.02.8322 – 20

ROLINE USB Type C Sync & Charge Cable for Apple Devices with Lightning Connector

USB Type C sync & charging cable for Apple devices with Lightning plug - ideal for transferring data from iPhone/ iPad to Mac/MacBook!

- USB Type C cable with MFI certified Apple Lightning connector for all newer iPhones and iPads (except iPad Pro)
- For connecting devices with Lightning jack to Mac/MacBook, PCs, Ultrabooks or other devices with USB Type C port
- Enables wired charging and data exchange
- Colour: white







roline®
Designed for Professionals

	Order-No. – P.U.
ROLINE USB Type C Sync & Charge Cable for Apple Devices with Lightning Connector, white, 1.0 m	11.02.8323 – 10

ROLINE 8pin + MicroB + Type C to USB Charge & Sync Cable

Connect almost all popular smartphones or tablets via Apple Lightning, USB Type C or USB Micro B plug to e.g. your PC or charger - suitable for loading and for data transfers!

- USB 2.0 cable with one USB Type A connector and one Apple Lightning (8pin), USB Micro B and USB Type C connector each
- For the connection of devices with Apple Lightning or Micro USB / USB Type C socket- so almost all common smartphones or tablets can be connected!
- With the revolutionary USB Type C connector you are prepared for future generations of devices.
- The Lightning plug (8pin) is suitable for all iPhones and iPads from the fifth generation onwards, e.g. for iPhone 8 or iPhone X
- Complies with USB 2.0 standard (transmission up to 480 Mbit/s)
- Allows loading of mobile devices and data exchange
- Colour: white





roline®
Designed for Professionals

	Order-No. – P.U.
ROLINE 8pin + MicroB + Type C to USB Charge & Sync Cable, white, 1.0 m	11.02.8329 – 10

VALUE USB 2.0 Charging Cables

Charging cable for USB devices with USB Micro B connector

- To connect an USB device with USB Micro B to another device with USB Micro B connector for charging
- Only charging, no data transfer
- Not suitable for NOKIA or BLACKBERRY
- **Color: white (11.99.8307) / black (11.02.8307)**
- Length: 0,3m



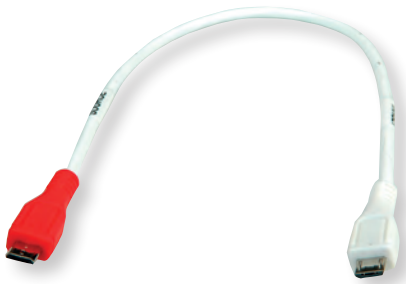

Value®

roline®
Designed for Professionals

	Order-No. – P.U.
VALUE USB 2.0 Charging Cable, Micro B - Micro B, M/M, 0.3m	11.99.8307 – 25
ROLINE USB 2.0 Charging Cable, Micro B - Micro B, M/M, 0.3m	11.02.8307 – 10

VALUE/ROLINE USB 2.0 Cables, OTG

- High quality USB cable with one Type A (female) and one Micro B USB connector
- For the connection of devices with Micro USB connector; e.g. digital cameras, mobile phones, MP3 players or PDAs
- Not suitable for Samsung Galaxy S3 mini (GT-I8190)
- Meets standard USB 2.0 (transfer rate up to 480 Mbit/s)
- Colour: black

roline®
Designed for Professionals





Value®

	Order-No. – P.U.
VALUE USB 2.0 Cable, A - Micro B, F/M, OTG, 0.15 m	11.99.8311 – 100
ROLINE USB 2.0 Cable, A - Micro B, F/M, OTG, 0.15 m	11.02.8311 – 25

ROLINE USB 2.0 Spiral Cable, A - Micro B

High quality USB cable with one Type A and one Micro USB connector

- Improved shielding
- For the connection of devices with Micro USB connector; e.g. smartphones / mobile phones or digital cameras / DSLR
- Meets standard USB 2.0 (transfer rate up to 480 Mbit/s)
- Colour: black



roline® Designed for Professionals

	Order-No. – P.U.
ROLINE USB 2.0 Spiral Cable, A - Micro B, M/M, 1.0 m	11.02.8317 – 10

ROLINE USB 2.0 LED Charging Cable

- For Power Charging, Data Sync and Data Transfer
- LED lighting effect lets you know your device is charging (RED color while charging, continuous BLUE color when the charging process is finished)
- Supports data transfer- you can move music, pictures, videos and any other files to and from your device
- Cable design prevents kinks, knots or tangles in the cable
- Color: black



roline® Designed for Professionals

	Order-No. – P.U.
ROLINE USB 2.0 LED Charging Cable, A - Micro B, M/M, 1.0 m	11.02.8318 – 10

ROLINE USB 2.0 Cables, C (90° angled) - A reversible

To connect smartphones, Tablets, external hard drives (HDD/SSD) and other USB devices to your PC, laptop or charger with the new USB Type C connection - both connectors are angled!

- USB 2.0 connection cable with Type A to Type C male/male connector (L-Shape, 90° angled)
- Suitable for data transfer rates of up to 480 Mbit/s
- Connectors: 1x USB Type A connector, 1x USB type C (L-Shape, 90° angled) connector
- Color: black



roline® Designed for Professionals

	Order-No. – P.U.
ROLINE USB 2.0 Cable, C (90° angled) - A reversible, M/M, black, 0.8 m	11.02.9035 – 10
ROLINE USB 2.0 Cable, C (90° angled) - A reversible, M/M, black, 1.8 m	11.02.9036 – 10
ROLINE USB 2.0 Cable, C (90° angled) - A reversible, M/M, black, 3.0 m	11.02.9037 – 10

ROLINE USB Cable Micro B + Type C to USB A

USB 2.0 cable with 2-in1 connector

- USB Type C and Micro B combo allows the cable to perform 2-in-1 functionality
- Allows you to transfer data from your mobile device
- Connect the cable to your Smartphone or tablet and charge your device by connecting the USB connector into your wall charger or transfer data by connecting it with your computer
- The one end of the cable is equipped with a Micro USB B plug, alternatively by an attachment with a type C connector, the second side has a type A connector
- Complies with the standard USB 2.0 (transmission up to 480 Mbit/s)
- Color: black



roline® Designed for Professionals

	Order-No. – P.U.
ROLINE Cable USB Micro B + Type C M/M to USB2.0 A M, black, 1.0 m	11.02.8328 – 10

ROLINE USB 3.2 Gen 1 Cable, A-C, M/M

ROLINE USB 3.0 / USB 3.2 Gen 1 silicone cable with data transfer rates of up to 5 Gbit/s. The silicone-sheathed flat cable not only looks great, but also allows extremely flexible usage thanks to its small bending radius.

Note: According to the current specifications of USB.org we have adapted the technical data of our USB 3 products. The new designation for the already known USB specifications has been changed to USB 3.2 Gen 1 (formerly USB 3.0 / USB 3.1 Gen 1) and USB 3.2 Gen 2 (formerly USB 3.1 / USB 3.1 Gen 2).

- USB 3.0 / USB 3.2 Gen 1 cable in high quality
- With USB Type C and a classic USB Type A plug
- Suitable for data transfer rates of up to 5 Gbit/s
- Rugged aluminum plugs and a flexible, flat silicone cable for optimal durability
- Type: A - C
- Length: 11 cm
- Colour: black



roline® Designed for Professionals

	Order-No. – P.U.
ROLINE USB 3.2 Gen 1 Cable, A-C, M/M, black, 11 cm	11.02.9014 – 10

ROLINE USB 3.2 Gen 2 Cable, PD (Power Delivery) 20V3A, with Emark, C-C, M/M

ROLINE USB 3.1 / USB 3.2 Gen 2 silicone cable with data transfer rates of up to 10 Gbit/s and support of PD (Power Delivery) at up to 20V3A. The silicone-sheathed flat cable not only looks great, but also allows extremely flexible use thanks to its small bending radius.

Note: According to the current specifications of USB.org we have adapted the technical data of our USB 3 products. The new designation for the already known USB specifications has been changed to USB 3.2 Gen 1 (formerly USB 3.0 / USB 3.1 Gen 1) and USB 3.2 Gen 2 (formerly USB 3.1 / USB 3.1 Gen 2).

- High quality USB 3.1 / USB 3.2 Gen 2 cable with improved shielding
- With the new reversible Type C connectors at both ends
- Gold-plated contacts for low wear at high plugging cycles
- Suitable for data transfer rates of up to 10 Gbit/s
- Supports USB Power Delivery to 20V / 3A



roline® Designed for Professionals

	Order-No. – P.U.
ROLINE USB 3.2 Gen 2 Cable, PD (Power Delivery) 20V3A, with Emark, C-C, M/M, black, 11 cm	11.02.9054 – 10

ROLINE USB 3.2 Gen 1 Hub, 4 Ports, Type C Connection Cable, with Power Supply (PD)

With this hub up to four USB 3.0 / USB 3.2 Gen 1 peripheral devices can be connected to the USB Type C port of a PC.

- Fixed USB cable with type C connector for host connection
- Four USB Type A ports for connecting peripheral devices
- One Port USB Type C PD (Power Delivery) to charge your MacBook, Ultrabook or mobile devices
- Data transfer rates of up to 5 Gbps (USB 3.0 / USB 3.2 Gen 1)
- Automatic determination of the optimal transmission rate
- Silver aluminium housing



roline®
Designed for Professionals

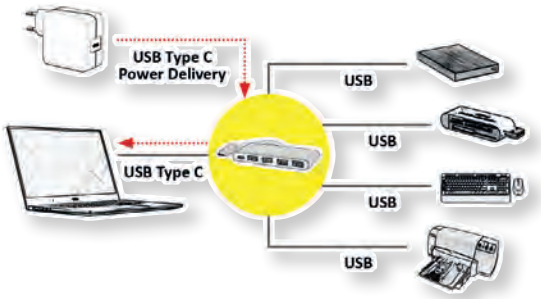

Technical information	14.02.5045
PC connection	1x USB Type C
Device connection	4x USB Type A
Dimensions (HxWxD)	11 x 94 x 181 mm

	Order-No. – P.U.
ROLINE USB 3.2 Gen 1 Hub, 4 Ports, Type C cable, with PD	14.02.5045 – 10

VALUE USB 3.2 Gen 1 Mini DP Docking Station

Docking station for your notebook - the solution if you need more interfaces for your notebook.

- Extend the number of USB 3.0 interfaces, get another video interface and connect to a network- all with this docking station.
- Connects to the notebook via USB 3.0 (upstream) and Mini DP
- USB 3.0 Mini DP docking station
- Upstream connection: 1x USB3.0
- Downstream connection 2x USB3.0
- HDMI port with a resolution: up to 1920 x 1080
- 1x RJ45 Ethernet port (Ethernet 10/100) network can be accessed through the USB port
- Power Mode: Bus-powered
- Supported Operating System: Windows 7/ 8/ 8.1/10 and Mac OS 10
- Dimensions: 305 x 120 x 20 mm

Connectors front side:
- 2x USB3.0 Type A F for connection of computer/notebook peripherals (printer, scanner...)
- 1x HDMI F port for video output
- 1x DP F port for video output
- 1x RJ45- 10/100 Ethernet LAN port

Connectors back side (notebook):
- 1x USB 3.0 M
- 1x Mini DP M

- Con- t-
  ents:
  Docking station



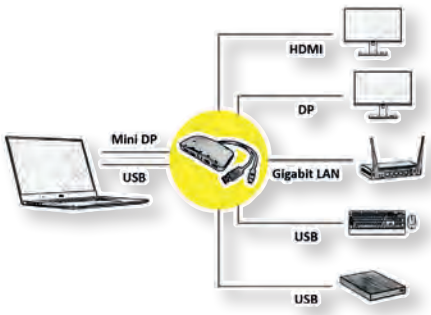

Value®

	Order-No. – P.U.
VALUE USB 3.2 Gen 1 Mini DP Docking Station	12.99.1041 – 10

ROLINE Cableadapter Mini DisplayPort / DisplayPort / Type C - HDMI

• You want to connect your graphics card with Mini DisplayPort / DisplayPort /Type C connector to a HDMI monitor TV with HDMI connector ? The solution is the ROLINE adapter cable with Mini DisplayPort / DisplayPort / type C to HDMI.

Note: The Mini DisplayPort adapter only works in one direction: the Mini DisplayPort connector is only on the data source side can be used (eg graphics card) and only ONE single output is available (DVI or HDMI or DP)

- Adapter with Mini DisplayPort connector and VGA, DVI and HDMI socket
- The Mini DisplayPort / DisplayPort / USB Type C to HDMI adapter delivers UHD videos to your UHD display / projector
- Fits perfectly for mobile applications, performing of high-resolution tasks
- It's design is ideal for BYOD (Bring Your Own Device) applications at the office
- Mini DisplayPort/ DisplayPort and the reversible USB Type-C connector adapter allows an easy connection to your computer or notebook
- Maximum resolution: 3840x2160 @60Hz
- Cable length: ca. 15 cm



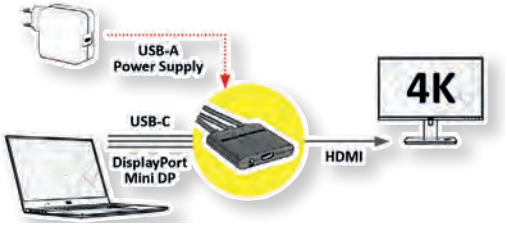

roline®
Designed for Professionals

	Order-No. – P.U.
ROLINE Cableadapter Mini DisplayPort / DisplayPort / Type C - HDMI, 0.15 m, Active	12.03.3139 – 10

VALUE Type C - HDMI/VGA Adapter + Power Delivery

Connect your Macbook, Ultrabook, Notebook/Laptop or PC with USB Type C interface to an HDMI display or projector - with a maximum resolution of up to 3840x2160 @60Hz! Charge your device simultaneously over PD (Power Delivery) and connect an additional peripheral or other device like a SSD to the additional USB Type A Port.

- USB 3.1 / USB 3.2 Gen 2 Type C to HDMI cable adapter for MacBook, Ultrabook, Notebook/Laptop or PC
- Mirror or extend the display of your device to any HDMI monitor or projector
- Maximum resolution: 3840x2160 @60Hz
- No additional power supply required
- USB Type C PD: Power Delivery Function for charging of devices via the additional Type C connection
- Connectors: HDMI Female and Type C Male; additionally, 1x USB 3.0 / USB 3.2 Gen 1 Type A and 1x USB Type C PD
- Cable length: ca. 10 cm



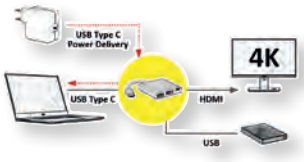



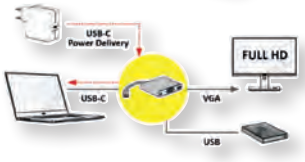

	Order-No.	– P.U.
VALUE Type C - HDMI Adapter, M/F, 1x USB 3.2 Gen 1 A F, 1x C (Power Delivery)	12.99.1131	– 10
VALUE Type C - VGA Adapter, M/F, + 1x USB 3.2 Gen 1 A F, + 1x C (Power Delivery)	12.99.3201	– 10

VALUE Type C - VGA / HDMI / DVI / DP Adapter

Connect your Macbook, Ultrabook, Notebook/Laptop or PC with USB Type C connector to a VGA, DVI, HDMI or DP monitor, TV or projector - with a maximum resolution of 3840x2160 @60Hz!

- USB 3.1 Type C to VGA / HDMI / DVI / DP cable adapter for Macbooks, Ultrabooks, Notebooks/Laptops or PCs with USB Type C interface
- Connect your device with USB Type C port to any monitor or projector with optional VGA, DVI, HDMI or DisplayPort port
- This adapter allows you to mirror or expand your display to an external display device
- Portable, compact design
- No power supply required
- Connections: VGA, DVI, HDMI and DP jack and Type C connector
- Cable length: approx. 10 cm
- Maximum resolution: 3840x2160 @60Hz



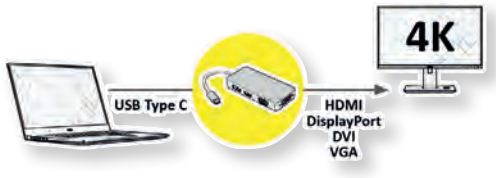

	Order-No.	– P.U.
VALUE Type C - VGA / HDMI / DVI / DP Adapter (white)	12.99.3230	– 5

ROLINE Type C - HDMI Adapter + Power Delivery

Connect a monitor or projector with HDMI interface to your MacBook, Ultrabook, Notebook / Laptop or PC with USB Type C connection. Use the additional Type C connector of the adapter to power your device (e.g. Macbook) simultaneously!

- USB 3.1 Type C to HDMI Cableadapter
- Connect your device with USB-C port to any HDMI display or projector
- This adapter allows you to mirror or extend your display to any HDMI-enabled TV or display
- Portable design
- No power adapter required
- Connectors: HDMI Female and Type C Male; additional Type C port with PD (Power Delivery) to e.g. load your device simultaneously
- Cable length: ca. 10 cm



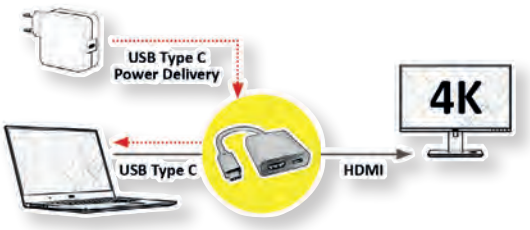

	Order-No.	– P.U.
ROLINE Type C - HDMI Adapter, + 1x Type C PD, M/F	12.03.3211	– 10

VALUE USB Type C Docking Station, 4K HDMI, 3x USB 3.2 Gen 1, Gigabit Ethernet

The docking station is supplied for Macbooks, Ultrabooks or Notebooks/Laptops and provides a quick and easy connection to the workplace peripherals that you use every day, including one HDMI connector, that allows you a maximum resolution of up to 3840x2160 @60Hz!

- Plug & Play
- Aluminium casing
- Small, compact design
- System requirement: Windows 7/8/10 or MacOS X10.2 and higher

Connection to device:
- 1x USB 3.1 / USB 3.2 Gen 2 Type C M

Connection for peripheral devices
- 1x HDMI Video Output: Mirror or extend your screen to a TV, monitor or projector.
- 3x USB 3.0 / USB 3.2 Gen 1 ports (data transfer rate up to 5Gbit/s), for connection of wired keyboard/mouse, USB HDD/SSD, etc.
- 1x SD/TF Card Reader
- 1x USB Type C PD (Power Delivery) + Data
- 1x RJ45 for Gigabit Ethernet

Note: According to the current specifications of USB.org we have adapted the technical data of our USB 3 products. The new designation for the already known USB specifications has been changed to USB 3.2 Gen 1 (formerly USB 3.0 / USB 3.1 Gen 1) and USB 3.2 Gen 2 (formerly USB 3.1 / USB 3.1 Gen 2).

- Contents: Docking Station, manual

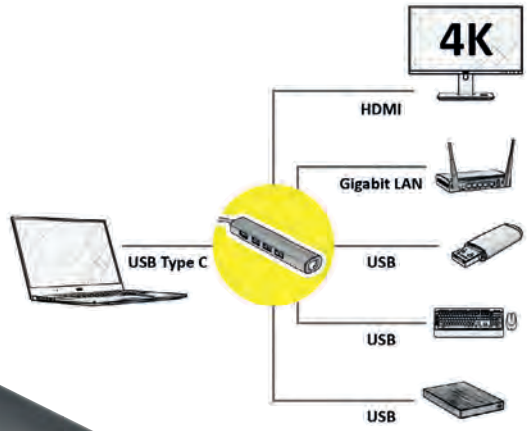



	Order-No.	P.U.
VALUE USB Type C Docking Station, 4K HDMI, 3x USB 3.2 Gen 1, Gigabit Ethernet	12.99.1043	5

ROLINE Dual Head Docking Station for Net-/Notebooks, „Black and White“

The Dual Head docking station for net-/notebooks provides a quick and easy connection to the workplace peripherals that you use every day.

Connection to net-/notebook:
- 1x USB 3.0 Type B F

Connection for peripheral devices
- 1x DVI-I monitor output- supports video resolutions up to 1920 x 1080
- 1x HDMI monitor output- supports video resolutions up to 1920 x 1080 (FullHD)
- 4x USB 2.0 ports make connections quick and easy
- 2x USB 3.0 for HDD or other fast USB USB 3.0 devices, ideal for use with „quick access“ devices
- 1x RJ45 Gigabit LAN jack
- 1x 3,5mm mikrophone jack on the front
- 1x 3,5mm headphone jack on the front
- Gain instant access to your keyboard, monitor, mouse and all peripherals with one USB plug
- DualView lets you expand your work area across your notebook screen and external monitor
- Dual display settings- Allows you to switch between mirror and extended video mode
- Plug & Play
- Supports Windows 2000/XP/Vista/7
- Contents: Docking Station, power supply, USB cable, stand, driver CD, manual



	Order-No.	P.U.
ROLINE Dual Head Docking Station for Net-/Notebooks, „Black and White“, USB 3.0	12.02.1042	5

VALUE Type C - HDMI Adapter, M/F, 2x USB 3.2 Gen 1 A F, 1x Type C (Power Delivery)

Connect your Macbook, Ultrabook, Notebook/Laptop or PC with USB Type C interface to an HDMI display or projector (with a maximum resolution of up to 3840x2160 @60Hz) and another device, e.g. an external harddisk, to the additional USB Type A Port, while charging your device simultaneously over the Type C PD port!

- USB 3.1 Type C to HDMI cableadapter for MacBook, Ultrabook, Notebook/Laptop or PC
- Connect your device with USB Type C port to any HDMI display or projector
- This adapter allows you to mirror or extend your display to your HDMI-enabled TV or display
- Maximum resolution: 3840x2160 @60Hz
- Portable design
- No power adapter required
- USB Type C PD: Power Delivery Function for charging of devices via the additional Type C connection
- Connectors: HDMI Female and Type C Male; additionally, 2x USB 3.0 A F and 1x USB Type C F
- Cable length: ca. 10 cm

Note: According to the current specifications of USB.org we have adapted the technical data of our USB 3 products. The new designation for the already known USB specifications has been changed to USB 3.2 Gen 1 (formerly USB 3.0 / USB 3.1 Gen 1) and USB 3.2 Gen 2 (formerly USB 3.1 / USB 3.1 Gen 2).

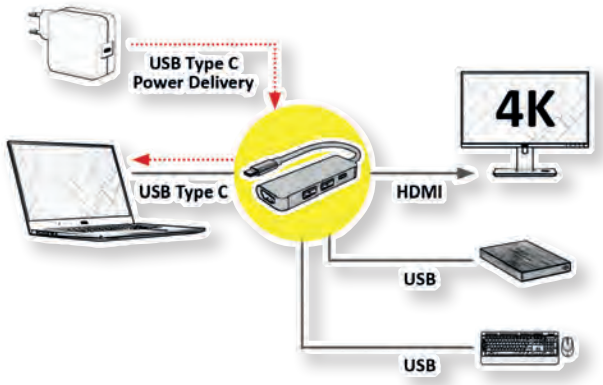



	Order-No. – P.U.
VALUE Type C - HDMI Adapter, M/F, 2x USB 3.2 Gen 1 A F, 1x Type C (Power Delivery)	12.99.1042 – 10

ROLINE USB Type C Docking Station, 4K HDMI, USB 3.2 Gen 1, Power Delivery, Gigabit Ethernet

The docking station is supplied for Macbooks, Ultrabooks or Notebooks/Laptops and provides a quick and easy connection to the workplace peripherals that you use every day, including one HDMI connector, that allows you a maximum resolution of up to 3840x2160 @60Hz and connections for USB 3.0 / USB 3.2 Gen 1!
- Plug & Play
- Aluminium casing
- Small, compact design
- System requirement: Windows 7/8/10 or MacOS X10.2 and higher

Connection to device:
- 1x USB 3.1 / USB 3.2 Gen 2 Type C F

Connection for peripheral devices
- 1x HDMI Video Output: Mirror or extend your screen to a TV, monitor or projector.
- 1x USB 3.0 / USB 3.2 Gen 1 ports (data transfer rate up to 5Gbit/s), for connection of wired keyboard/mouse, USB HDD/SSD, etc.
- 1x USB Type C PD (Power Delivery)- for charging your connected notebook
- 1x RJ45 for Gigabit Ethernet

Note: According to the current specifications of USB.org we have adapted the technical data of our USB 3 products. The new designation for the already known USB specifications has been changed to USB 3.2 Gen 1 (formerly USB 3.0 / USB 3.1 Gen 1) and USB 3.2 Gen 2 (formerly USB 3.1 / USB 3.1 Gen 2).

- Contents: Docking Station, manual

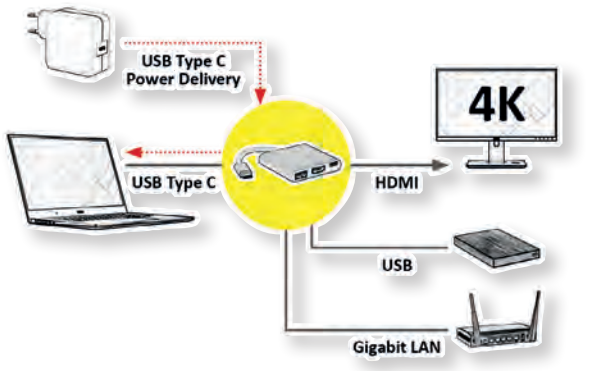



	Order-No. – P.U.
ROLINE USB Type C Docking Station, 4K HDMI, 1x USB 3.2 Gen 1 Port, 1x USB Type C PD (Power Delivery), 1x Gigabit Ethernet	12.02.1020 – 10

ROLINE USB 3.2 Gen 2 Type C Multiport Docking Station, 4K HDMI, USB 3.2 Gen 1, SD/Micro SD Card Reader, Power Delivery, Gigabit Ethernet

The USB Type C Docking Station provides your MacBook, Ultrabook, Notebook or Laptop with a 4k capable HDMI port, 2x USB 3.0 / USB 3.2 Gen 1, 1x SD/MicroSD card reader, 1x USB Type C PD (Power Delivery) and 1x Gigabit Ethernet!

- Plug & Play
- Aluminium housing in space grey
- Multiport Docking Station with HDMI connection, allows the expansion of a display or mirroring to another monitor, television or beamer.
- Max. Resolution: 3840x2160 at 30Hz
- Compact and flat design.

- System requirements: Windows 7/8/10 or MacOS X10.2 and higher

Connection to the mobile device:
- 1x USB Type C connector

Connections for peripheral devices:
- 1x HDMI 4K video output: Mirror or expand your screen to a TV, monitor or projector.
- 2x USB 3.0 / USB 3.2 Gen 1 Type A ports (data transfer rate up to 5Gbit/s), for connecting e.g. keyboard/mouse, USB HDD/SSD, etc.
- 1x card reader for SD/MicroSD
- 1x USB Type C PD (Power Delivery)
- 1x RJ45 for Gigabit Ethernet

Note: According to the current specifications of USB.org we have adapted the technical data of our USB 3 products. The new designation for the already known USB specifications has been changed to USB 3.2 Gen 1 (formerly USB 3.0 / USB 3.1 Gen 1) and USB 3.2 Gen 2 (formerly USB 3.1 / USB 3.1 Gen 2).

- Contents: Docking Station

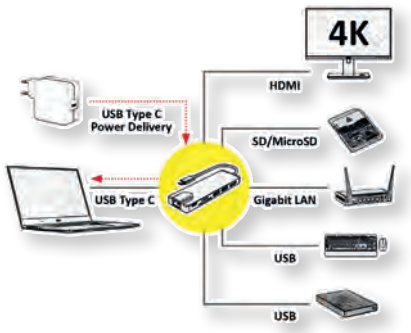



roline®
Designed for Professionals

	Order-No. – P.U.
ROLINE USB 3.2 Gen 2 Type C Multiport Docking Station, 4K HDMI, 2x USB 3.2 Gen 1, 1x SD/Micro SD Card Reader, 1x USB Type C PD (Power Delivery), 1x Gigabit Ethernet	12.02.1118 – 5

ROLINE USB Type C Docking Station, 4K HDMI, USB 3.2 Gen 1, SD/MicroSD Card Reader, Power Delivery, Gigabit Ethernet

The docking station is supplied for Macbooks, Ultrabooks or Notebooks/Laptops and provides a quick and easy connection to the workplace peripherals that you use every day, including one HDMI connector, that allows you a maximum resolution of up to 3840x2160 @60Hz!

- Plug & Play
- Aluminium casing
- Small, compact design
- System requirement: Windows 7/8/10 or MacOS X10.2 and higher

Connection to device:
- 1x USB 3.1 / USB 3.2 Gen 2 Type C M

Connection for peripheral devices
- 1x HDMI Video Output: Mirror or extend your screen to a TV, monitor or projector.
- 2x USB 3.0 / USB 3.2 Gen 1 ports (data transfer rate up to 5Gbit/s), for connection of wired keyboard/mouse, USB HDD/SSD, etc.
- 1x SD/TF Card Reader
- 1x USB Type C PD (Power Delivery) + Data
- 1x RJ45 for Gigabit Ethernet

Note: According to the current specifications of USB.org we have adapted the technical data of our USB 3 products. The new designation for the already known USB specifications has been changed to USB 3.2 Gen 1 (formerly USB 3.0 / USB 3.1 Gen 1) and USB 3.2 Gen 2 (formerly USB 3.1 / USB 3.1 Gen 2).

- Contents: Docking Station, manual

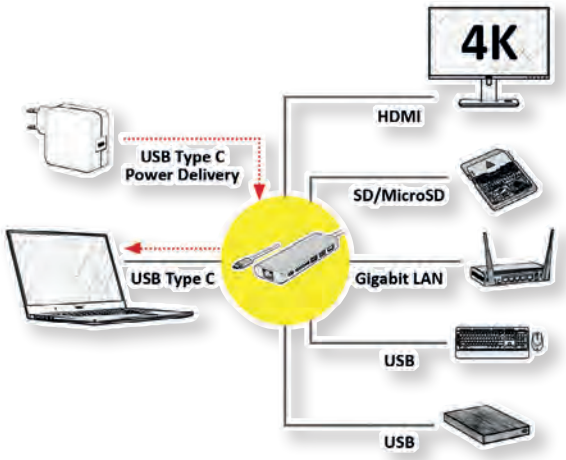



roline®
Designed for Professionals

	Order-No. – P.U.
ROLINE USB Type C Docking Station, 4K HDMI, 2x USB 3.0 / USB 3.2 Gen 1 Ports, 1x SD/MicroSD Card Reader, 1x USB Type C PD (Power Delivery) + Data, 1x Gigabit Ethernet	12.02.1037 – 5

ROLINE GOLD USB Type C Docking Station, 4K HDMI, 2x USB 3.2 Gen 1 Ports, 1x USB Type C PD (Power Delivery)

The docking station is supplied for Macbooks, Ultrabooks or Notebooks/Laptops and provides a quick and easy connection to the workplace peripherals that you use every day, including one HDMI connector, that allows you a maximum resolution of up to 3840x2160 @30Hz!

- Golden aluminium case
- Narrow, flat design
- Black golden nylon braid around the cable
- Golden shield plates and contacts for reliable signal transmission

Connection to the mobile device:
- 1x USB 3.1 / USB 3.2 Gen 2 Type C

Connections for peripheral devices:
- 1x HDMI video output: mirror or expand your screen to a TV, monitor or projector
- 2x USB 3.0 / USB 3.2 Gen 1 Type A ports (data transfer rate up to 5Gbit/s), to connect e.g. keyboard / mouse, USB HDD / SSD, etc.
- 1x USB Type C PD (Power Delivery)
- Contents: Docking Station

Note: According to the current specifications of USB.org we have adapted the technical data of our USB 3 products. The new designation for the already known USB specifications has been changed to USB 3.2 Gen 1 (formerly USB 3.0 / USB 3.1 Gen 1) and USB 3.2 Gen 2 (formerly USB 3.1 / USB 3.1 Gen 2).

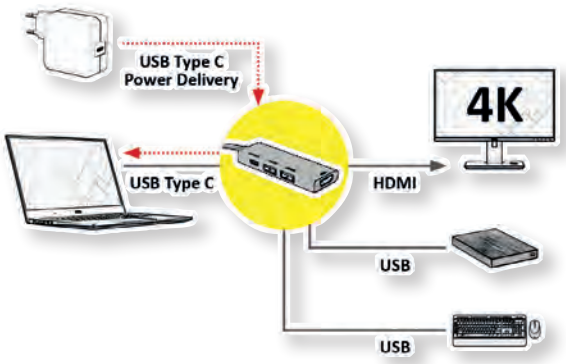

roline®
Designed for Professionals



	Order-No.	P.U.
ROLINE GOLD USB Type C Docking Station, 4K HDMI, 2x USB 3.2 Gen 1 Ports, 1x USB Type C PD (Power Delivery)	12.02.1119	5

ROLINE GOLD USB Type C Docking Station, 4K HDMI, 2x USB 3.2 Gen 1, 1x Type C PD (Power Delivery)

The docking station is supplied for Macbooks, Ultrabooks or Notebooks/Laptops and provides a quick and easy connection to the workplace peripherals that you use every day, including one HDMI connector, that allows you a maximum resolution of up to 3840x2160 @30Hz!

- Golden aluminium case
- Narrow, flat design
- Black golden nylon braid around the cable
- Golden shield plates and contacts for reliable signal transmission

Connection to the mobile device:
- 1x USB 3.1 / USB 3.2 Gen 2 Type C

Connections for peripheral devices:
- 1x HDMI video output: mirror or expand your screen to a TV, monitor or projector
- 2x USB 3.0 / USB 3.2 Gen 1 Type A ports (data transfer rate up to 5Gbit/s), to connect e.g. keyboard / mouse, USB HDD / SSD, etc.
- 1x USB Type C PD (Power Delivery)
- Contents: Docking Station

Note: According to the current specifications of USB.org we have adapted the technical data of our USB 3 products. The new designation for the already known USB specifications has been changed to USB 3.2 Gen 1 (formerly USB 3.0 / USB 3.1 Gen 1) and USB 3.2 Gen 2 (formerly USB 3.1 / USB 3.1 Gen 2).

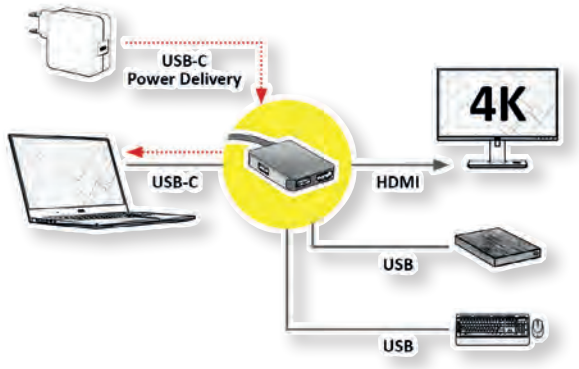

roline®
Designed for Professionals



	Order-No.	P.U.
ROLINE GOLD USB Type C Docking Station, 4K HDMI, 2x USB 3.2 Gen 1 Ports, 1x USB Type C PD (Power Delivery)	12.02.1120	10

ROLINE USB Type C Docking Station, 4K HDMI, USB 3.2 Gen 1, SD/MicroSD Card Reader

The docking station is supplied for Macbooks, Ultrabooks or Notebooks/Laptops and provides a quick and easy connection to the workplace peripherals that you use every day, including one HDMI connector, that allows you a maximum resolution of up to 3840x2160 @60Hz!

- Plug & Play
- Aluminium casing
- Small, compact design
- System requirement: Windows 7/8/10 or MacOS X10.2 and higher

Connection to device:
- 1x USB 3.1 / USB 3.2 Gen 2 Type C M

Connection for peripheral devices
- 1x HDMI Video Output: Mirror or extend your screen to a TV, monitor or projector.
- 2x USB 3.0 / USB 3.2 Gen 1 ports (data transfer rate up to 5Gbit/s), for connection of wired keyboard/mouse, USB HDD/SSD, etc.

- 1x SD/TF Card Reader

Note: According to the current specifications of USB.org we have adapted the technical data of our USB 3 products. The new designation for the already known USB specifications has been changed to USB 3.2 Gen 1 (formerly USB 3.0 / USB 3.1 Gen 1) and USB 3.2 Gen 2 (formerly USB 3.1 / USB 3.1 Gen 2).

- Contents:Docking Station, manual





roline®
Designed for Professionals

	Order-No. – P.U.
ROLINE USB Type C Docking Station, 4K HDMI, 2x USB 3.2 Gen 1 Ports, 1x SD/MicroSD Card Reader	12.02.1041 – 5

ROLINE USB Type C Docking Station, 4K HDMI, VGA, USB 3.2 Gen 1, SD/MicroSD Card Reader, Power Delivery, Gigabit Ethernet

Docking Station for Macbooks, Ultrabooks or Notebooks/Laptops - offers HDMI in 4K, 1x VGA, two USB 3.0 / 3.2 Gen 1 ports, SD/MicroSD card reader, USB type C PD (Power Delivery) and one port for Gigabit Ethernet. You get a fast and easy connection to the peripherals you use every day, including VGA and HDMI ports with a maximum resolution of up to 3840x2160 @60Hz!

- Plug & Play
- aluminium casing
- Small, compact design with a small special feature: the included USB Type C connection cable can be easily stowed in the docking station- it is therefore neither lost nor damaged during transport.
- One of the two USB 3.0 / USB 3.2 Gen 1 Type A ports supports Battery Charge v1.2 (5V 1.5A) to easily power even larger hard drives

Connection to the device:
- 1x USB 3.1 / USB 3.2 Gen 2 Type C (F)

Connection for peripheral devices:
- 1x HDMI and 1x VGA port video output: Mirror or expand your screen to a TV, monitor or projector with up to 3840x2160 @60Hz resolution.
- 2x USB 3.0 / USB 3.2 Gen 1 type A ports (data transfer rate up to 5Gbit/s), e.g. for connecting a wired keyboard or mouse, USB HDD/SSD, etc.
- 1x SD/TF card reader
- 1x USB Type C (F), PD (Power Delivery)
- 1x RJ45 for Gigabit Ethernet

Note: According to the current specifications of USB.org we have adapted the technical data of our USB 3 products. The new designation for the already known USB specifications has been changed to USB 3.2 Gen 1 (formerly USB 3.0 / USB 3.1 Gen 1) and USB 3.2 Gen 2 (formerly USB 3.1 / USB 3.1 Gen 2).

- Contents: Docking Station

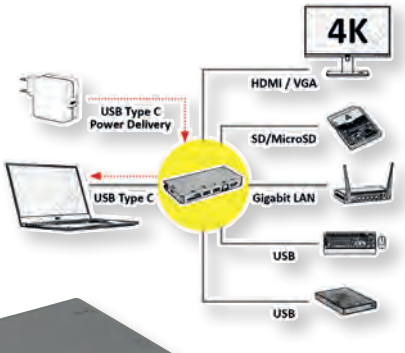



roline®
Designed for Professionals

	Order-No. – P.U.
ROLINE USB Type C Docking Station, 4K HDMI, 1x VGA, 2x USB 3.2 Gen 1 Ports, 1x SD/MicroSD Card Reader, 1x USB Type C PD (Power Delivery), 1x Gigabit Ethernet	12.02.1022 – 4

VALUE USB 3.2 Gen 2 Type C Multiport Docking Station, 4K HDMI/DP, VGA, 2x USB 3.2 Gen 1, 1x USB 2.0, 1x SD/Micro SD Card Reader, 1x USB Type C PD (Power Delivery), 1x Gigabit Ethernet, 1x 3.5mm Audio

The USB Type C Docking Station with three video ports supplies your MacBook, Ultrabook, Notebook or Laptop with each one 4K capable HDMI/DisplayPort connection, as well as with a VGA port, 3x USB 3.0 / USB 3.2 Gen 1, 1x SD/MicroSD card reader, 1x USB Type C PD (Power Delivery), 1x Gigabit Ethernet and a 3.5mm Audio Port!

- Plug & Play
- Aluminum enclosure in space grey
- Designed with detachable right-angled USB-C cable to perfectly fit into the USB-C port of your laptop
- Multiport Docking Station for maximum connectivity, allows you to expand one display or mirror it to up to two monitors, TVs or beamers at a time.
- Max. resolution: 3840x2160 @30Hz
- Dual video output (DP+HDMI, HDMI+VGA, DP+VGA) max resolution up to 1920x1080p/60Hz with Multi-Stream Transport (MST) technology
- Three video output (DP+HDMI+VGA) max resolution up to 720p/60Hz with Multi-Stream Transport (MST)
- Small, compact and flattened design- Notebooks can be positioned at an angle on the docking station to make typing easier and healthier
- Anti-slip surface on both sides to protect your device
- System requirements: Windows 7/8/10 or MacOS X10.2 and higher

Connection to the mobile device:
- 1x USB 3.1 / USB 3.2 Gen 2 Type C plug

Connections for peripheral devices:
- 1x HDMI 4K video output: Mirror or expand your screen to a TV, monitor or projector
- 1x DP F
- 1x VGA F
- 2x USB 3.0 / USB 3.2 Gen 1 Type A ports (data transfer rate up to 5Gbit/s) / 1x USB2.0 Type A (max. 480Mbit/s), to connect e.g. keyboard/mouse, USB HDD/SSD, etc.
- 1x card reader for SD/MicroSD
- 1x Type C PD (Power Delivery)
- 1x RJ45 for Gigabit Ethernet
- 1x 3,5mm audio connector

Note: According to the current specifications of USB.org we have adapted the technical data of our USB 3 products. The new designation for the already known USB specifications has been changed to USB 3.2 Gen 1 (formerly USB 3.0 / USB 3.1 Gen 1) and USB 3.2 Gen 2 (formerly USB 3.1 / USB 3.1 Gen 2).

- Contents: Docking Station



NEW

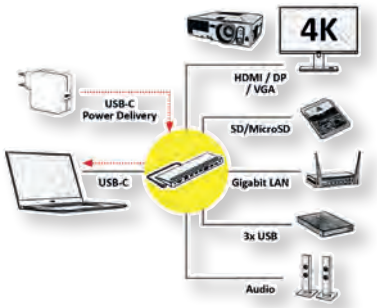

	Order-No.	– P.U.
VALUE USB 3.2 Gen 2 Type C Multiport Docking Station, 4K HDMI/DP, VGA, 2x USB 3.2 Gen 1, 1x USB 2.0, 1x SD/Micro SD Card Reader, 1x USB Type C PD (Power Delivery), 1x Gigabit Ethernet, 1x 3.5mm Audio	12.99.1117	– 2

ROLINE USB 3.2 Gen 2 Type C Multiport Docking Station, 4K HDMI / Mini DP, VGA, USB 3.2 Gen 1, SD/Micro SD Card Reader, Power Delivery, Gigabit Ethernet, Audio

The USB Type C Docking Station with three video ports supplies your MacBook, Ultrabook, Notebook or Laptop with each one 4K capable HDMI/Mini DisplayPort connection, as well as with a VGA port, 3x USB 3.0 / USB 3.2 Gen 1, 1x SD/MicroSD card reader, 1x USB Type C PD (Power Delivery), 1x Gigabit Ethernet and a 3.5mm Audio Port!

- Plug & Play
- Aluminum enclosure in space grey
- Multiport Docking Station for maximum connectivity, allows you to expand one display or mirror it to up to two monitors, TVs or beamers at a time.
- Max. resolution: 3840x2160 @30Hz
- Small, compact and flattened design- Notebooks can be positioned at an angle on the docking station to make typing easier and healthier
- Anti-slip surface on both sides to protect your device
- System requirements: Windows 7/8/10 or MacOS X10.2 and higher

Note: According to the current specifications of USB.org we have adapted the technical data of our USB 3 products. The new designation for the already known USB specifications has been changed to USB 3.2 Gen 1 (formerly USB 3.0 / USB 3.1 Gen 1) and USB 3.2 Gen 2 (formerly USB 3.1 / USB 3.1 Gen 2).

- Contents: Docking Station



roline®
Designed for Professionals





	Order-No.	– P.U.
USB 3.2 Gen 2 Type C Multiport Docking Station, 4K HDMI/Mini DP, VGA, 3x USB 3.2 Gen 1, 1x SD/Micro SD Card Reader, 1x USB Typ C PD (Power Delivery), 1x Gigabit Ethernet, 1x 3.5mm Audio	12.02.1117	– 2

ROLINE 4K Adapter, Active, v1.2, HDMI - DP, M/F

NEW 4K 2160p

HDMI to DisplayPort cable adapter for connecting a graphics card with HDMI to a monitor with DP connection - with a resolution of up to 3840x2160 @60Hz!

- If you want to connect a graphic card with HDMI Female to a monitor by using a DisplayPort cable, you need this HDMI to DisplayPort adapter
- Connectors: HDMI Male, DisplayPort Femalee
- DisplayPort version 1.2 allows increased resolutions, higher refresh rates, and greater color depth
- Max. resolution: 3840 x 2160 (@60Hz)
- Active
- Remark: The HDMI- DisplayPort adapter is only working in one direction: the HDMI Port plug has to be connected to the source device (e.g. graphic card)

What are the benefits of using Active adapters and converters?Active products can have a huge advantage when working with long cable runs and video conversion applications. In terms of video converters, active units generally have hardware inside to improve your image.





	Order-No.	P.U.
ROLINE 4K Adapter, active, v1.2, HDMI - DP, M/F	12.03.3147	10

roline® Designed for Professionals

ROLINE Type C - 3.5mm Audio Adapter, M/M

First choice for your Type C USB devices that don't have a 3.5mm jack, such as MacBooks, Ultrabooks, smartphones, and tablets - this cable helps you to connect these devices to headphones, headsets, and Hi-Fi systems!

- The adapter cable converts the USB Type C into a 3.5mm stereo plug.
- Reversible design for the USB Type C connector
- Stable signal transmission for clear sound and voice quality
- Portable for mobile use
- Connector: 3.5mm plug and Type C plug





	Order-No.	P.U.
ROLINE Type C - 3.5mm Audio Adapter, M/M, 0.8 m	12.03.3216	20
ROLINE Type C - 3.5mm Audio Adapter, M/M, 1.8 m	12.03.3217	20
ROLINE Type C - 3.5mm Audio Adapter, M/M, 3 m	12.03.3218	10

roline® Designed for Professionals

VALUE Type C - 2x 3.5mm Audio Adapter, M/F

First choice for your Type C USB devices that don't have a 3.5mm jack, such as MacBooks or Ultrabooks, as well as smartphones and tablets.

- The adapter cable converts the USB Type C into two 3.5mm audio jacks, one each for microphone and headphones.
- Reversible design for the USB Type C connector
- Stable signal transmission
- Portable for mobile use
- Color-coded jacks with headphone/microphone icons
- Connectors: 2x 3.5mm sockets and 1x type C connector
- Cable length: approx. 13 cm





	Order-No.	P.U.
VALUE Type C - 2x 3.5mm Audio Adapter, M/F, 0.15 m	12.99.3213	10

Value®

ROLINE Type C - 2x 3.5mm Audio Adapter, M/F

First choice for your Type C USB devices that don't have a 3.5mm jack, such as MacBooks or Ultrabooks, as well as smartphones and tablets.

- The adapter cable converts the USB Type C into two 3.5mm audio jacks, one each for microphone and headphones.
- Reversible design for the USB Type C connector
- Stable signal transmission
- Narrow plastic housing for mobile applications
- Color-coded jacks with headphone/microphone icons
- Connectors: 2x 3.5mm sockets and 1x type C connector
- Cable length: approx. 13 cm





	Order-No.	P.U.
ROLINE Type C - 2x 3.5mm Audio Adapter, M/F, 0.15 m	12.03.3209	20

roline® Designed for Professionals

ROLINE USB Type C - 1x 3.5mm Audio + 1x Type C (PD), M/F

First choice for your USB Type C devices that aren't equipped with a 3.5mm jack, like MacBooks or other Ultrabooks, as well as Smartphones and Tablets.

- The adapter cable allows the connection of a headset or headphones with 3.5mm stereo plug and offers an additional USB Type C port for parallel charging of your terminal device
- Reversible design for the USB Type C connector
- Stable signal transmission
- Flexible, durable cable, perfectly suited for mobile use
- Connectors: 1x 3.5mm stereo jack and 1x USB type C connector
- Power delivery function (for charging devices via the additional type C connector)
- Cable length: approx. 13 cm





	Order-No.	– P.U.
ROLINE USB Type C - 1x 3.5mm Audio + 1x Type C (PD), M/F, 0.13 m	12.03.3222	– 10

roline®
Designed for Professionals

ROLINE USB Type 8 Pin - 3.5mm Audio Adapter, M/F

First choice for your iPads/iPhones with Lightning jack, which are not equipped with a 3.5mm audio connector - to make calls/conferences or simply listen to music.

- The adapter cable converts the Lightning socket of your iPhone/iPad into a 3.5mm audio socket.
- Reversible design for the Lightning connector
- Stable signal transmission
- Flexible, durable cable, perfectly suited for mobile use
- Connector: 3,5mm socket and Lightning plug
- Cable length: approx. 13 cm







	Order-No.	– P.U.
ROLINE USB Type 8 Pin - 3.5mm Audio Adapter, M/F, 0.13 m	12.03.3214	– 10

roline®
Designed for Professionals

VALUE / ROLINE / ROLINE GOLD USB Type C - 3.5mm Audio Adapter, M/F

First choice for your USB Type C devices that aren't equipped with a 3.5mm jack, like MacBooks or other Ultrabooks, as well as Smartphones and Tablets.

- The adapter cable converts USB Type C to 3.5mm Audio jack
- Reversible design for the USB Type C connector
- Stable signal transmission
- Portable design
- Connectors: 3.5mm Female and Type C Male
- Cable length: ca. 13 cm









	Order-No.	– P.U.
VALUE Adapter USB Typ C - 3,5mm Audio, ST/BU, 0,13 m	12.99.3214	– 10
ROLINE Adapter USB Typ C - 3,5mm Audio, 0,13 m	12.03.3213	– 10
ROLINE GOLD Adapter USB Typ C - 3,5mm Audio, ST/BU, 0,13 m	12.03.3223	– 10

roline®
Designed for Professionals

VALUE / ROLINE 3.5mm Adapters

- Use in multimedia environment
- Adapter to connect 3,5mm Stereo male plug to 2 x 3,5mm Stereo female plug (Audio)







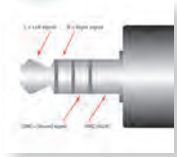

		Order-No.	– P.U.
VALUE 3.5mm Adapter, 1x 3.5mm M to 2x 3.5mm F	A	11.99.4440	– 100
VALUE 3.5mm Adapter, 1x 3.5mm M to 2x RCA F	B	11.99.4441	– 100
ROLINE 4 Conductor 3.5 mm Stereo Plug (speaker+microphone), 15 cm	C	11.09.4441	– 20

VALUE Holder for IPad/Ebook/Tablet

- Wall/under desk (clamp) cabinet mount for most of the tablets like iPad1, iPad2, iPad3, iPad 4, iPad Air and iPad Air 2, Samsung Galaxy 10.1 and Tab 2
- 360° rotation of panel and base
- Flexible angle between two legs of 36°~ 180°
- Adjustable top leg length of 26-64mm
- Die casting joint part connecting aluminum arms with length of 120mm
- Freely ±30° tilted silicone feet for holding your tablets perfectly
- Tilt of panel: ±125°
- Tilt of arms: ±100°
- Material: aluminum/steel/plastic



		Order-No.	– P.U.
VALUE Holder for IPad/Ebook/Tablet, Wall- / Under Cabinet Mount, 4 Joints	A	17.99.1150	– 5
VALUE Holder for iPad/Ebook/Tablet, Clamp Type, 4 Joints	B	17.99.1151	– 5

VALUE Notebook Cable Security Lock

Suitable for all notebooks with „security hole“

- Easy use and installation: tie the steel cable around any furniture or something like that
- Install the security lock in the „security hole“ and lock it with the key
- Zinc alloy housing and brass cylinder
- Satin nickel plated standard, other finishes available upon request
- 7-pin tumbler mechanism
- Steel made tubular keys, nickel plated
- Key withdrawals in one position only
- 90 degrees turn to unlock
- Stainless steel cable: 5 mm diameter, 1.7 m length, dark grey with transparent PVC coating
- Contents: Anti-Theft Cable with keys



	Order-No.	– P.U.
VALUE Notebook Cable Security Lock, with key	19.99.3022	– 50

VALUE USB Wall Chargers

For powering a smartphone/tablet, external SSD/HDD or other devices

- For charging or as a power supply from a device via its USB input
- Perfect supplement for your Wireless Charger, as the scope of delivery often does not include plug-in power supplies
- Suitable, for example, for smartphone/tablet, external SSD/HDD enclosures and other devices
- Charger with one USB Type A socket
- Matt black PVC housing and Euro flat plug

Technical data
- Plug-in power supply
- Input voltage: 100- 240V AC, 50- 60Hz



Technical data:	19.99.1038	19.99.1092	19.99.1093	19.99.1064	19.99.1091
Input:	100 - 240 VAC	100 - 240 VAC	100 - 240 VAC	100 - 240 VAC	100 - 240 VAC
Output:	1x USB A F	1x USB A F	1x USB A F	2x USB A F	1x USB A F 1x USB C
	5V 2.4A	3.6V-6.5V/3A, 6.5V-9V/2A, 9V-12V/1.5A (max. 18 W)	5V / 2.4A	5V / 2A	3.6V-6.5V/3A, 6.5V-9V/2A, 9V-12V/1.5A (max. 18 W) 5V / 3A
Power (max.):	10W	18W	12W	10W	33W
Dimensions:	50 x 28 x 48 mm	36 x 24 x 84 mm	36 x 24 x 84 mm	46 x 28 x 85 mm	50.5 x 29 x 71 mm
Additional features		QC 3.0 (Quick Charge)			QC 3.0 (Quick Charge) Power Delivery



		Order-No.	– P.U.
VALUE USB Wall Charger, 1-Port, 10W	A	19.99.1038	– 20
VALUE USB Wall Charger, 1-Port, QC3.0, 18W	B	19.99.1092	– 10
VALUE USB Wall Charger, 1-Port, 12W	C	19.99.1093	– 10
VALUE USB Wall Charger, 2-Ports, 10W	D	19.99.1064	– 20
VALUE USB Wall Charger, 2-Ports (1x QC3.0, 1x USB C), 33W	E	19.99.1091	– 10

ROLINE USB Wall Chargers

For charging or powering a device via its USB input.
- For charging of mobile devices (tablets / smartphones)
- Quick Charge 3.0 supported (19.11.1018 / 1032 / 1061 QC3.0)
- Multi-Protection: Over Current / Short Circuit / Over Voltage Protection
- Compact Design
- PowerIQ technology- identifies what kind of device is plugged into and delivers the proper voltage/amperage
- Input: 100- 240 V AC, 50- 60 Hz



A

Technical data:	**19.11.1023**	**19.11.1018**
Input:	100 - 240 VAC	100 - 240 VAC
Output:	1x USB C F	2x USB A F (5V; 2.4A)
	3.3-5.9V/3A, 3.3-11V/2A; 5V/3A, 9V/2A, 12V/1.5A	5V/2,4A - 3A, 9V-3A, 12V/3A, 15V/3A, 20V/3A, 20,3V/3A
Power (max.):	18W	61W
Dimensions:	37 x 24 x 82 mm	55 x 29 x 88 mm
Additional features	QC 4.0 (Quick Charge)	QC 3.0 (Quick Charge)



B

Technical data:	**19.11.1061**	**19.11.1032**
Input:	100 - 240 VAC	100 - 240 VAC
Output:	1x USB A F	1x USB A F 1x USB C
	3.6V-6.5V/3A,6.5V-9V/2A, 9V-12V/1.5A (max. 18W)	3.6V-6.5V/3A,6.5V-9V/2A, 9V-12V/2A (max. 24 W) 5V 3A / 9V 3A / 15V 2A / 20V 1.5A
Power (max.):	18W	49.5W
Dimensions:	40 x 30 x 53 mm	63.6 x 62.2 x 28.5mm
Additional features	QC 3.0 (Quick Charge)	QC 3.0 (Quick Charge) Power Delivery

roline®
Designed for Professionals



C



D

		Order-No. – P.U.
ROLINE Power Wall Charger, 1x Type C, QC4.0, 18W	A	19.11.1023 – 10
ROLINE Power Wall Charger, 1x Type C PD/QC3.0, 61W	B	19.11.1018 – 10
ROLINE Power Wall Charger, 1x USB A, QC3.0, 18W	C	19.11.1061 – 10
ROLINE Power Wall Charger, 2x USB, 1x QC3.0 + 1x C (PD), 49.5W	D	19.11.1032 – 10

ROLINE USB Charging Station

- For charging smart phones, tablet PCs (e. g. iPad), MP3 players ...
- Power and charge up to 7 devices at once in one convienent location on your desktop, counter top, lobby, or waiting room.
- Perfect for home or office use, most cell phones and tablets fit in station's slots without removing protective cases (slot widths- 19mm)
- 7 Powered USB Ports (5x 2.4A)- Simply connect your own charging cable and the charging station will charge up to 7 devices, including smartphones and high-powered devices such as tablets
- Organize up to 7 devices- 7 slots with anti-scratch silicone pads organize your devices even with the cases still on
- Surge protection on each port
- Built-in smart charging chipset provides and determines the charge needed for your device, delivering a steady and safe charge
- Power in a compact space
- Power Supply: 19VDC; 3.4A
- Output: 7x 2.4A
- Contents: USB charger, power adapter

roline®
Designed for Professionals



Technical data:	19.07.1051
Number of ports:	7
Output:	7x USB 2.0 A, F
Input Voltage:	100 - 240V AC, 50 - 60Hz
Output Voltage:	5VDC
Power Output rate:	7x 5V DC 2.4A
Colour:	black
Material (housing):	plastic

	Order-No. – P.U.
ROLINE USB Charging Station, 7 Port	19.07.1051 – 10

ROLINE USB Charger, C5 Connection, 1x Type C Port, 65W

For charging or as power supply of a device via USB type C - with up to 65W!

- For charging devices with USB Type C socket such as MacBooks, Ultrabooks, Notebooks, Laptops, NUCs, Tablets or even Smartphones
- Perfect for on the go: simply use any cable with C5 plug and country-specific connection
- Supports USB PD (Power Delivery) function on output port
- Protection: Current / short-circuit / overvoltage protection
- Compact design, black housing and cable
- Input: 100- 240V AC, 50-60Hz
- Output: 5V-3A, 9V-3A, 12V-3A, 15V-3A, 20V-3,25A (max. 65 W)

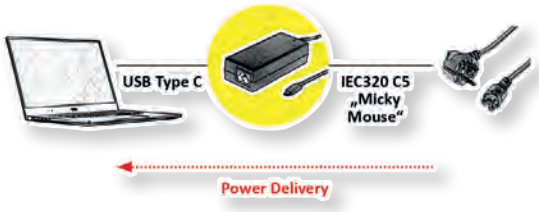



	Order-No. – P.U.
ROLINE USB Charger, C5 Connection, 1x Type C Port, 65W	19.11.1034 – 10

roline®
Designed for Professionals

VALUE USB Charger with Car Plug

Easily charge your smartphone or other USB devices in the car or power mobile navigation devices

- Car plug
- Input voltage: DC 12V- 24V
- Contents:car charger



19.99.1039



19.99.1059

Technical data:	19.99.1039	19.99.1059	19.07.1054
Input:	12-24 V DC, 2.1A max.	12-24 V DC, 2.1A max.	12-24 V DC
Output:	2x USB Type A F (1x QC3.0)	2x USB Type A F	2x USB A F
Power:	18W 1x 3.6-6.5VDC 3A, 6.5-9VDC 2A, 9V-12VDC 1A 1x 5V DC 2.4A	10W (5VDC; .12A)	15,5W (5VDC;3,1A)
Dimensions:	33x53mm	33x35mm	33 x 60 mm

Value®



19.07.1054

	Order-No. – P.U.
VALUE USB Charger with Car Plug, 2-Port (1x QC3.0, 1x 5VDC 2.4A), 18W	19.99.1039 – 20
VALUE USB Car Charger, 2 Port, 10W	19.99.1059 – 20
ROLINE USB Car Charger, 2 Port, 15W	19.07.1054 – 10

roline®
Designed for Professionals

ROLINE Wireless Charging Pad for Mobile Devices, 10W

Wireless Charging Pad for wireless charging of QI-enabled smartphones - the integrated coil with up to 10W in the charger allows the device to be charged very quickly and efficiently.

- Charges a compatible smartphone or other matching Qi devices
- One charging coil for up to 10W of power
- Plug & Play- No driver required
- For use, for example, at the workplace in the office or at home
- Integrated LED display
- Colour: white
- Contents: Wireless charging pad, manual

roline®
Designed for Professionals





	Order-No. – P.U.
ROLINE Wireless Charging Pad for Mobile Devices, 10W	19.11.1011 – 10



Multimedia

6

USB Display Adapters 6.02
Audio/Video Extenders over TP . . . . . 6.02 – 6.04
VGA / DP / HDMI Extenders . . . . . 6.02 – 6.04
Wireless HDMI Audio/Video Systems 6.04
UHD HDMI Active Cables . . . . . 6.05 – 6.07
Audio/Video Splitters . . . . . 6.08 – 6.10
Audio/Video Switches 6.11
HDMI Matrix Switches 6.12
Audio Extractor 6.13
Audio Adapters / Converters 6.13
Headsets 6.14
HDMI Emulator 6.14
Multimedia Audio/Video Modules 6.14

VALUE USB Display Adapter, USB 3.0 to VGA

- Compliant with USB 3.0 specification revision 1.0
- Compliant to USB A/V standard
- USB upstream port supporting SuperSpeed/HighSpeed data rate (5 Gbit/s / 480Mbit/s)
- Video output up to 1920 x 1080 @ 60 Hz in USB 3.0 application
- Video output 800 x 600 in USB 2.0 application
- Plug & Play
- Contents: USB display adapter



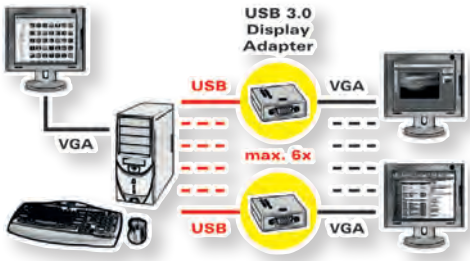



	Order-No. – P.U.
VALUE USB Display Adapter, USB3.0 to VGA	12.99.1037 – 10

VALUE USB 3.0 Mini DP Docking Station

1080p FULL HD

- USB 3.0 Mini DP docking station
- Upstream connection: 1x USB3.0
- Downstream connection 2x USB3.0
- HDMI port with a resolution: up to 1920 x 1080
- 1x RJ45 Ethernet port (Fast Ethernet 10/100) network can be accessed through the USB port
- Power Mode: Bus-powered
- Supported Operating System: Windows 7/ 8/ 8.1/10 and Mac OS 10
- Dimensions: 305 x 120 x 20 mm
- Contents: Adapter

Connectors front side:
- 2x USB3.0 Type A F for connection of computer/notebook peripherals (printer, scanner...)
- 1x HDMI F port for video output
- 1x DP F port for video output
- 1x RJ45- 10/100 Fast Ethernet LAN port

Connectors back side:
- 1x USB 3.0 M
- 1x Mini DP M



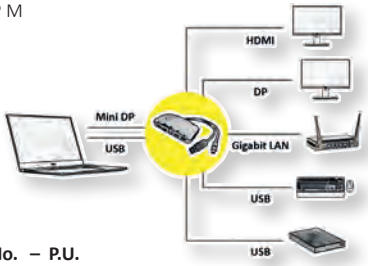

	Order-No. – P.U.
VALUE USB3.0 Mini DP Docking Station	12.99.1041 – 10

VALUE VGA Extender over Twisted Pair

- Extension of VGA signal over Cat. 5e cable, up to 80 m
- Equalization length is adjustable
- VGA signal gain is adjustable
- Durable metal casing
- Supports power over cable technique, only one unit has to be connected to power
- Hardware solution, no compatibility problems
- Contents: Local unit, remote unit, 1x power supply (12V DC, 600mA) for remote unit, VGA cable HD15 M-M (1.2 m), manual

Technical data:	each unit
	1x USB 3.0
VGA connection:	1x HD15 F
TP ports:	1x RJ-45
Max. resolution (nominal):	1280 x 1024 @ 60Hz
Casing:	Metal
Power supply:	12V DC, 1A



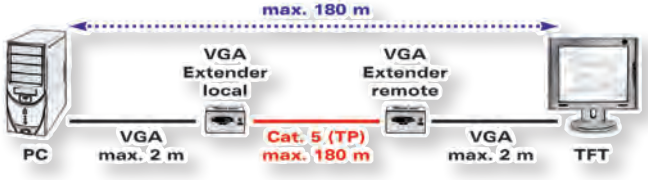

	Order-No. – P.U.
VALUE VGA Extender over Twisted Pair, 80 m	14.99.3431 – 10
VALUE VGA Extender over Twisted Pair, 180 m	14.99.3430 – 10

ROLINE DisplayPort Extender, 30m

DisplayPort Repeater to create a point-to-point connection to reduce costs for applications that require a single DisplayPort input and output device over long distances - with up to 3840x2160 @60Hz resolution!

- Ideal for display applications in conference rooms, classrooms & training facilities etc.
- Extend the DisplayPort signal up to 30 meters
- Supports DisplayPort resolutions up to 4K @60Hz
- Compliant with DisplayPort specification v1.2
- Compliant with HDCP 2.2 & DPCP
- Supports 4K 60Hz (max. length: 5m in; 5m out); 4K 30Hz (max. length: 15m in; 15m out); 2560 x 1600 60Hz (max. length: 10m in; 20m out)
- Supports DP++ Dual Mode, compatible with HDMI, DVI or VGA adapters
- HDTV compatible
- LED Indicator
- Plug & Play
- Power supply included in the scope of delivery (5 VDC, 1A)
- Contents: DisplayPort v1.2 Repeater, Power Supply (5V 1A), Quick Installation Guide



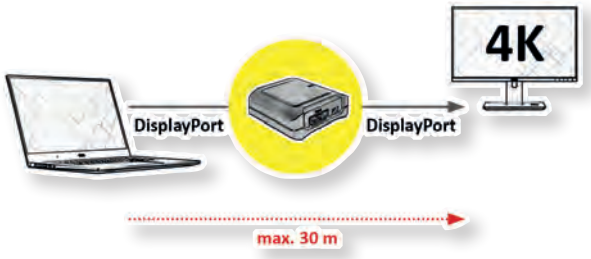

roline®
Designed for Professionals

	Order-No.	P.U.
ROLINE DisplayPort Extender, 30m	14.01.3473	12

ROLINE Audio/Video System, HDMI, via Cat.6A, 4K@60Hz

4K 2160p UHD-1

The ROLINE HDMI A/V system transmits an HDMI signal from a source device like a DVD player, a PC/laptop or a console via Cat.6A cable to a display device like a TV, monitor or beamer/projector - with a resolution of up to 3840x2160 @60Hz (max. 30m) or 1920x1080 @60Hz (max. 45m)!

Audio / video transmission is via HDMI and CAT. 6a cable. Up to 4k (3840x2160) @60Hz at a distance of up to 30m can be achieved. At longer distances of up to 45m the resolution is reduced to Full HD (1920x1080) @60Hz.

- Transmits HDMI signals from source devices such as DVD players, PCs/laptops or consoles to a TV, monitor or beamer/projector.
- Resolution: 4k (3840x2160) @60Hz at up to 30m; Full HD (1920x1080) @60Hz at up to 45m
- HDCP compatible
- Supports 3D video transmission
- Black metal housing
- Contents: transmitter, receiver, 2 power supplies, manual

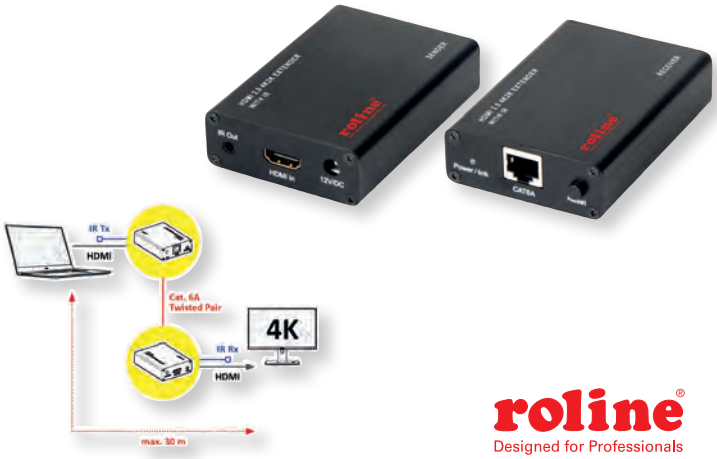

roline®
Designed for Professionals

	Order-No.	P.U.
ROLINE Audio/Video System, HDMI, via Cat.6A, 4K@60Hz, 30m/45m	14.01.3417	5

VALUE HDMI Extender over TP

3D capable 1080p FULL HD

- The transmission distance of the HDMI signal can be extended up to 25 meters by using two Cat. 5e/6 cables
- Max. resolution (nominal) while using two Cat.5e cables, 25 m: 1080p
- HDCP pass-through
- Stable metal casing
- Power supply included in delivery
- Contents: Transmitter (2x RJ-45 F, HDMI F), Receiver (2x RJ-45, HDMI F), 1x power supply (5V DC, 2A) for receiver, manual

Technical Data:

Max. resolution (nominal):	1.920 x 1.200, 1080p
Local unit:	2x RJ-45 F, 1x HDMI F
Remote unit:	2x RJ-45 F, 1x HDMI F
Dimensions:	20 x 45 x 80 mm
Power supply:	DC 5V; 2A



	Order-No.	P.U.
VALUE HDMI Extender over Twisted Pair, 25 m	14.99.3460	5

ROLINE HDMI Extender over TP

3D capable | 1080p FULL HD

- The transmission distance of the HDMI signal can be extended up to 50 meters by using only one Cat.6 cable
- Additional HDMI port on transmitter to connect a local display
- Max. resolution (nominal) over 50 meters: 1920 x 1080, 1080p
- Works with HDMI switch, HDMI splitter and all kinds of HDMI/HDCP source and output displays
- No software installation required
- Metal housing
- Power supply included
- Contents: Transmitter (1x RJ-45 F, 2x HDMI F), Receiver (1x RJ-45 F, 1x HDMI F), 2x power supply (for transmitter), manual

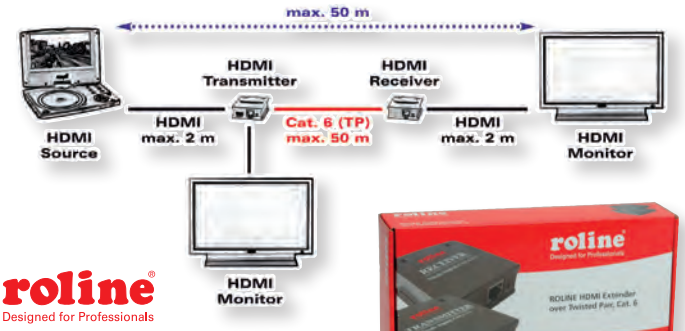

roline® Designed for Professionals

Technical data (14.01.3461):

Max. resolution (nominal):	1.920 x 1.200, 1080p
Transmitter:	RJ-45 F, 2x HDMI F
Receiver:	RJ-45 F, 1x HDMI F
Technical data (14.01.3462):	20 x 45 x 80 mm
Max. resolution (nominal):	1.920 x 1.200, 1080p
Transmitter:	RJ-45 F, 1x HDMI F
Receiver:	RJ-45 F, 1x HDMI F

digital signage

	Order-No.	P.U.
ROLINE HDMI Extender over Twisted Pair, Cat.6, 50m	14.01.3461	5
ROLINE HDMI Extender over Twisted Pair, Cat.5/6, 100 m	14.01.3462	1

VALUE Wireless Audio/Video System, HDMI

1080p FULL HD

The practical VALUE Wireless HDMI Audio/Video System transmits an HDMI signal wirelessly from a video source such as a DVD player, PC/laptop or console to a TV, beamer/projector or monitor - in a Full HD resolution of 1920x1080 @60Hz and up to 100m range!

The devices are connected via HDMI. The antennas enable wireless transmission of the HDMI signal between transmitter and receiver over a distance of up to 100 meters. The HDMI signal is encrypted for secure transmission.

- Transmits an HDMI signal wirelessly
- Antennas for audio/video transmission up to 100m distance between source and display device
- Suitable for mounting under a tabletop or on the wall, for maximum flexibility
- Sturdy metal housing in black
- Resolution: Supports Full HD (1920x1080 @60Hz)
- 3D support
- HDCP compatible
- Contents: Sender, receiver, 2x power supply, manual

Value®





	Order-No.	P.U.
VALUE Wireless Audio/Video System, HDMI, 100 m	14.99.3413	2

ROLINE HDMI Extender over Twisted Pair, Cat.5/6, chainable

1080p FULL HD

The transmission distance of the HDMI signal can be extended up to 100 m by using one Cat.5e or Cat.6 cable.

- Easily connect the transmitter and the receiver unit with a twisted pair cable of up to 100 m length
- Max. resolution (nominal) over 100 m: 1920 x 1200, 1080p
- Supports uncompressed HDMI signal
- Supports CEC pass-through
- Supports uncompressed audio stereo
- External infrared emitters- allow using the remote control of the source device
- Metal housing
- Power supply included in content of delivery
- Contents: Transmitter (1x RJ-45 F, 2x HDMI F), receiver (3x RJ-45 F, 1x HDMI F), infrared extender trasnsmitter, infrared extender receiver, 2x power supply, 2x cables IR (1.1m), 2x serial cables (3.5mm/DB9F, 1.1m), manual



Technical data (14.01.3468):

Max. resolution (nominal):	1.920 x 1.200, 1080p
Transmitter:	RJ-45 F, 2x HDMI F
Receiver:	RJ-45 F, 1x HDMI F
Technical data (14.01.3469):	
Max. resolution (nominal):	1.920 x 1.200, 1080p
Receiver:	3x RJ-45 F, 1x HDMI F
Dimensions:	115 x 91 x 28mm

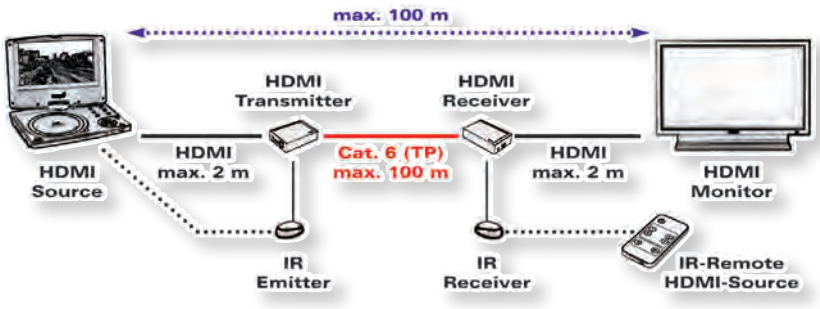

roline® Designed for Professionals

		Order-No.	P.U.
ROLINE HDMI Extender over TP, Cat.5/6, chainable, 100 m	A+B	14.01.3468	1
ROLINE HDMI Receiver over TP, for 14.01.3468, 100 m	B	14.01.3469	1

digital signage

ROLINE HDMI High Speed Cable with Repeater

3D capable | 1080p FULL HD

- For a total length of 30 meters between PC and monitor
- Hardware solution, no software required
- Integrated repeater without external power supply
- Dimensions of repater: 15 x 23 x 75 mm
- Color: black
- Contents: cable with integrated repeater



digital signage

roline® Designed for Professionals

	Order-No.	P.U.
ROLINE HDMI High Speed Cable, M - M, with Repeater, 30 m	14.01.3465	1

ROLINE HDMI High Speed Cable with Ethernet with Repeater

3D capable | 1080p FULL HD

- For a total length of 25 meters between computer and monitor
- Active repeater is integrated in the connectors
- Hardware solution, no software required
- No external power supply needed
- Connectors: HDMI Type A M
- Color: Black



digital signage

roline® Designed for Professionals

	Order-No.	P.U.
ROLINE HDMI High Speed Cable w.Eth., M - M, with Repeater, 25 m	14.01.3458	3

ROLINE HDMI High Speed Cable with Ethernet, with Repeater

4K | 2160p UHD-1

High-quality HDMI connection cable with HDMI connectors for optimal transmission of digital UHD TV signals at resolutions of up to 3840x2160 @30Hz at up to 50m.

- For a total length of 50 meters between Transmitter (PC, BluRay player, ...) and Receiver (Monitor, TV, Beamer)
- Active repeater for optimal signal transmission
- Hardware solution, no software required
- Connectors: HDMI Type A M/M
- Color: Black



roline® Designed for Professionals

digital signage

	Order-No.	P.U.
ROLINE HDMI High Speed Cable with Ethernet, M/M, with Repeater, 50.0 m	14.01.3464	2

ROLINE HDMI Ultra HD Cable + Ethernet, Active, Short Lengths

4K | 2160p UHD-1

High-quality HDMI connection cable with HDMI connectors for optimal transmission of digital HDTV signals at data rates up to 18 Gbit/s (600MHz). For the transmission of films in digital cinema-quality, with a resolution of up to 3840x2160 @60Hz!

- HDMI Ethernet Channel- Adds high-speed networking to an HDMI link, allowing users to take full advantage of their IP-enabled devices without a separate ethernet cable
- Audio Return Channel- Allows an HDMI-connected TV with a built-in tuner to send audio data „upstream“ to a surround audio system, eliminating the need for a separate audio cable
- 3D- Defines input/output protocols for major 3D video formats
- Cable with HDMI male connector on both sides
- High quality cable with golden plated shell
- Gold plated contacts for higher durability



digital signage

roline® Designed for Professionals

	Order-No.	P.U.
ROLINE HDMI Ultra HD Cable + Ethernet, active, M/M, black, 1 m	11.04.5910	20
ROLINE HDMI Ultra HD Cable + Ethernet, active, M/M, black, 1.5 m	11.04.5911	20
ROLINE HDMI Ultra HD Cable + Ethernet, active, M/M, black, 2 m	11.04.5912	15
ROLINE HDMI Ultra HD Cable + Ethernet, active, M/M, black, 3 m	11.04.5913	15
ROLINE HDMI Ultra HD Cable + Ethernet, active, M/M, black, 5 m	11.04.5915	10

VALUE UHD HDMI 4K Active Cables

4K 2160p UHD–1

This cable achieves resolutions with up to 4K UHD (3840x2160) @ 60Hz in up to 25m distance between data source and receiver! It's 3D capable and audio transmission is included.

- For a total length of 25 meters between computer and monitor
- Active repeater is integrated in the connectors
- Hardware solution, no software required
- No external power supply needed
- Connectors: HDMI Type A M
- Max. resolution: 3840x2160 @60Hz



	Order-No. – P.U.
VALUE UHD HDMI 4K2K Active Cable, M/M, 10 m	14.99.3451 – 5
VALUE UHD HDMI 4K2K Active Cable, M/M, 15 m	14.99.3452 – 5
VALUE UHD HDMI 4K2K Active Cable, M/M, 20 m	14.99.3453 – 5
VALUE UHD HDMI 4K2K Active Cable, M/M, 25 m	14.99.3454 – 5

ROLINE UHD HDMI 4K Active Cables

4K 2160p UHD–1

This cable achieves resolutions with up to 4K UHD (3840x2160) @ 60Hz in up to 25m distance between data source and receiver! It's 3D capable and audio transmission is included.

- For a total length up to 25 meters e.g. between computer and monitor
- Active repeater is integrated in the connectors
- Hardware solution, no software required
- No external power supply needed
- Connectors: HDMI Type A M
- Max. resolution: 3840 x 2160 @60Hz



	Order-No. – P.U.
ROLINE UHD HDMI 4K Active Cable, M/M, 10 m	14.01.3451 – 5
ROLINE UHD HDMI 4K Active Cable, M/M, 15 m	14.01.3452 – 5
ROLINE UHD HDMI 4K Active Cable, M/M, 20 m	14.01.3453 – 5
ROLINE UHD HDMI 4K Active Cable, M/M, 25 m	14.01.3454 – 5

VALUE Cable UHD HDMI Active Optical (AOC)

4K 2160p UHD–1

With our UHD (3840x2160 @60Hz) capable HDMI fiber cable you have the possibility to establish a connection of up to 50m between your devices. The active cable (AOC) does not require a separate power supply and is particularly well suited for routing in a cable duct.

- Total length of the terminal distance (e.g., from notebook / laptop to beamer or PC to monitor): 50 meters
- Hardware solution, no software required
- A signal repeater is installed in the connectors
- No external power supply required
- Low plug dimensions
- Maximum resolution of up to 3840x2160 @60Hz



	Order-No. – P.U.
VALUE Cable UHD HDMI Active Optical (AOC), M/M, 50 m	14.99.3482 – 1

VALUE DisplayPort Active Cable, v1.2, Active

4K 2160p

With our UHD (3840x2160 @60Hz) bi-directional DisplayPort cable you can connect up to 15/20 m between your devices. The active cable does not require a separate power supply.

- Total length of the end device distance (e.g. from notebook/laptop to beamer or PC to monitor): 15 / 20 meters
- Hardware solution, no software required
- A signal repeater is built into the connectors.
- The practical plug design prevents the cable from slipping out of the DisplayPort socket.
- Bidirectional: the cable can be used independently of the plug-in direction.
- Compliant DP v1.2 (max. 3840x2160 @60Hz)



	Order-No. – P.U.
VALUE DisplayPort Active Cable, v1.2, active, M/M, 15 m	14.99.3495 – 2
VALUE DisplayPort Active Cable, v1.2, active, M/M, 20 m	14.99.3496 – 2

ROLINE DisplayPort Cables (AOC)

8K 4320p

With our UHD (7680x4320 @60Hz) capable DisplayPort fiber optic cable you have the possibility to connect up to 30/ 50m between your devices. The active cable (AOC) does not require a separate power supply and is particularly suitable for installation in the cable duct due to its small diameter.

- Total length of the end device distance (e. g. from notebook/laptop to beamer or PC to monitor): 30 / 50 meters
- Hardware solution, no software required
- A signal repeater is built into the connectors.
- No external power supply required; the cable contains a copper fibre for power supply
- Small connector and cable dimensions; the cable has a smaller diameter than comparable cables made of pure copper due to the glass fibres.
- The practical plug design prevents the cable from slipping out of the DisplayPort socket



roline® Designed for Professionals

digital signage

	Order-No. – P.U.
ROLINE DisplayPort Cable (AOC), M/M, 30m	14.01.3490 – 1
ROLINE DisplayPort Cable (AOC), M/M, 50m	14.01.3492 – 1

ROLINE Type C - HDMI (AOC) Cable, 4K60, 30m

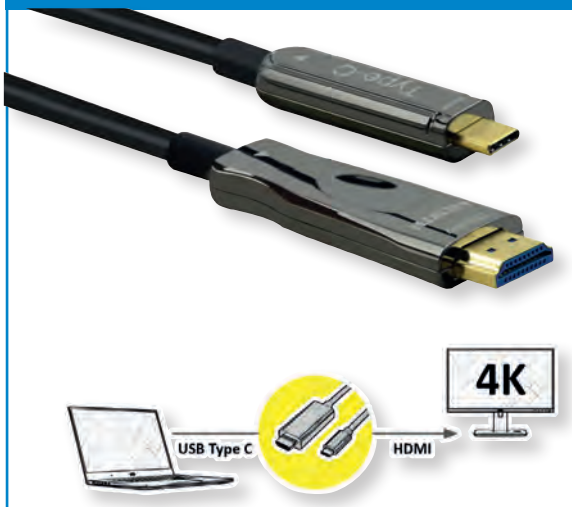

Connect your Macbook, Ultrabook, Notebook/Laptop or PC with USB Type C connector to an HDMI monitor, TV or projector with HDMI - with a maximum resolution of 3840x2160 @60Hz! The active cable (AOC) does not require a separate power supply and is particularly well suited for routing in a cable duct.

- USB Type C to HDMI cable for Macbook, Ultrabook, Notebook/Laptop or PC
- This adapter allows you to mirror or extend the display of your device to any HDMI-enabled TV, projector or display
- Portable design
- No power adapter required
- Maximum resolution: 3840x2160 @60Hz
- Connectors: HDMI Male and Type C Male

NEW

roline® Designed for Professionals

digital signage

	Order-No. – P.U.
ROLINE Type C - HDMI (AOC) Cable, 4K60, M/M, 30 m	14.01.3474 – 1

ROLINE Cable UHD HDMI Active Optical (AOC), 30m

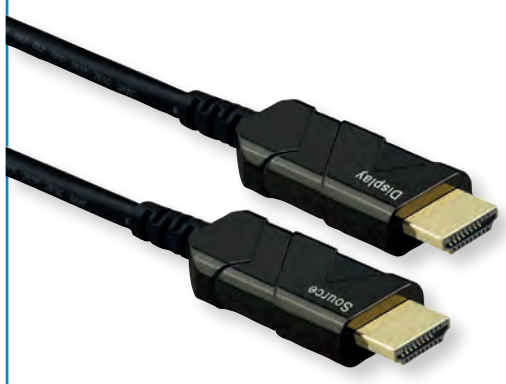

With our UHD (7680x4320 @60Hz) capable HDMI fiber cable you have the possibility to establish a connection of up to 30m between your devices. The active cable (AOC) does not require a separate power supply and is particularly well suited for routing in a cable duct.

- Total length of the terminal distance (e.g., from notebook / laptop to beamer or PC to monitor): 30 meters
- Hardware solution, no software required
- A signal repeater is installed in the connectors
- No external power supply required
- Low plug dimensions
- Maximum resolution of up to 7680x4320 @60Hz

NEW

roline® Designed for Professionals

digital signage

	Order-No. – P.U.
ROLINE Cable UHD HDMI Active Optical (AOC), M/M, 30 m	14.01.3483 – 1

VALUE / ROLINE Ultra HD HDMI Repeater, 4K

Allows you to extend the transmission range of your HDMI connection by up to 20m in total. Supports a maximum resolution of up to 3840x2160 @60Hz!

This 4k2k HDMI repeater regenerates the incoming HDMI Signal by decoding and re-encoding it to a new standard HDMI signal, so it can extend the transmission range without degradation. Up to 20 meters transmission distance. The repeater supports a resolution up to Ultra HD (4K)

- Support 3D and up to 3840x2160 @60Hz
- Compliant with HDCP
- Compatible to Full-HD 1080P
- Frequency bandwidth: up to 340MHz

- Input/output resolution HD:480i@60Hz, 576i@50Hz, 480p@60Hz, 1080p@50Hz, 1080p@60H-z,1080i@50Hz, 1080p@30Hz, 1080p@25Hz, 1080p@24Hz,2160P@30Hz, 2160P@60Hz
- Dimensions (WxHxD): 14.01.3459: 28 x 13 x 51mm



		Order-No.	P.U.
VALUE 4K HDMI Repeater, 20m	A	14.99.3459	20

		Order-No.	P.U.
ROLINE Ultra HDMI Repeater, 4K, 20m	B	14.01.3459	10

VALUE VGA Video Splitters, 2/4-way

- Duplicates VGA video signals to two/four video outputs
- Applications: multimedia, presentations, demos, etc.
- Max. resolution (nominal): 1920 x 1440 (14.99.3523) 1920 x 1080 (14.99.3527/3529)
- Video bandwidth: 250 MHz / 500 MHz
- Supports DDC and DDC2 on Port 1 (14.99.3523)
- Video input: 1x HD15 M, Video output: 2x / 4x HD15 F
- Contents: Video splitter (cable length: 65 cm + 30 cm USB cable for power supply - 14.99.3523) 14.99.3527 /14.99.3529 – splitter, main adapter 9VDC, 300mA



Technical data:	14.99.3523	14.99.3527	14.99.3529
VGA input:	1x HD15 M	1x HD15 M	1x HD15 M
VGA output:	2x HD15 F	2x HD15 F	4x HD15 F
Video bandwidth:	250 MHz	500 MHz	500 MHz
Max. resolution (nominal):	1920 x 1440	1920 x 1080	1920 x 1080

	Order-No.	P.U.
VALUE Portable VGA Video Splitter, 250 MHz, 2-way	14.99.3523	5
VALUE Desktop VGA Video Splitter, 500 MHz, 2-way	14.99.3527	10
VALUE Desktop VGA Video Splitter, 500 MHz, 4-way	14.99.3529	10

ROLINE VGA Video Splitter, 450 MHz, 2-way

- Applications
  - High Quality Multimedia Presentations
  - Video Conferencing
  - Education
  - Public Broadcasting Systems
  - Demos

- Duplicates one video signal to two outputs
- Supports 450 MHz bandwidth
- Max. resolution (nominal): 1920 x 1440
- DDC compatible
- USB Bus powered (USB power cable included)
- Cascadable

- Plastic casing
- Contents: Splitter, USB power cable (1.1m)

Technical Data:	14.01.3534
Input:	1x HD15 M
Output:	2x HD15 F
VGA bandwidth (-3db):	450MHz
Max resolution (nominal):	1920x1080
Cable distance:	30 m
Power supply:	5VDC; 0.5A

roline
Designed for Professionals

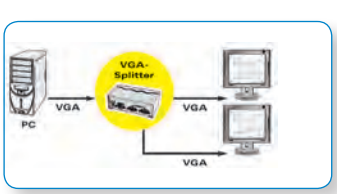



	Order-No.	P.U.
ROLINE VGA Video Splitter, 450 MHz, 2-way	14.01.3534	3

VALUE DVI Video Splitter

- Applications: multimedia, presentations, demos, etc.
- Duplicates DVI Video signals to two DVI Video outputs
- Video-bandwidth: 225MHz
- Max. resolution: 1920x1080
- Supports cascading of splitters
- Contents: Splitter, main adapter, manual



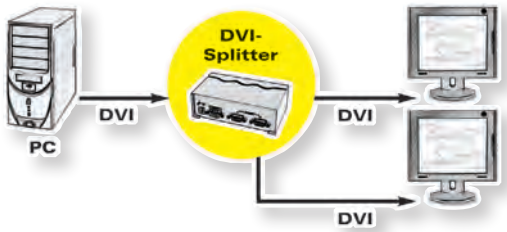

digital signage

Value®

Technical Data:	14.99.3501
Input:	1x DVI F
Output:	2x DVI F
Max. resolution (nominal):	1920 x 1080
Dimensions (LxWxH):	155 x 70 x 23 mm
Power supply:	5V DC, 2A

	Order-No.	P.U.
VALUE DVI Video Splitter, 2-way	14.99.3501	5

VALUE HDMI Splitter, 4K, 2-way

4K

For the connection of up to two HDMI-capable display devices (monitor/TV/beamer) via HDMI source (Ultrabook, laptop/notebook, BluRay player, etc.) - allows mirroring on up to two display devices at a resolution of up to 3840x2160 @60Hz!

- Duplicates a HDMI video signal to two HDMI video signals
- Connectors: 1 HDMI Input (e.g. BluRay/DVD-player), 2 HDMI outputs
- Max. resolution: 3840 x 2160 @60Hz
- Supports up to 5m cable on output side
- Plug & play, easy to install and simple to operate
- No software installation required
- Power supply is optional, but recommended (not included in the scope of delivery)
- Contents: splitter, manual



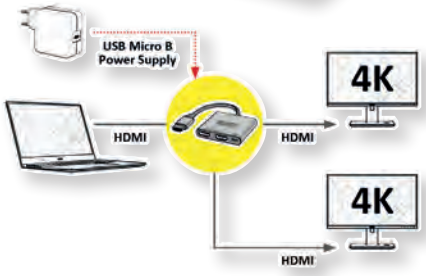

Value®

	Order-No.	P.U.
VALUE HDMI Splitter, 4K, 2-way	14.99.3585	10

ROLINE HDMI Splitter, 2/4-way

4K

- Duplicates a HDMI video signal to two/four HDMI video signals
- Connectors: 1 HDMI Input (e.g. DVD-player), 2/4 HDMI outputs
- Supports 480i, 480p, 720i, 720p, 1080i, 1080p, 3840x2160 @30Hz
- Plug & play, easy to install and simple to operate
- No software installation required
- HDCP 1.3 compliant
- Contents: splitter, manual





digital signage



roline®
Designed for Professionals

	Order-No.	P.U.
ROLINE HDMI Splitter, 2-way	14.01.3555	10
ROLINE HDMI Splitter, 4-way	14.01.3553	2

VALUE HDMI Splitter, 4K

3D capable | 4K | 2160p ULTRA HD

- Duplicates a HDMI video signal to two HDMI video signals with a 4K resolution
- Connectors: 1 HDMI Input (e.g. DVD-player), 2/8 HDMI outputs
- Supports 480i, 480p, 720i, 720p, 1080i, 1080p, 3840 x 2160 (@60Hz)
- Supports VGA, SVGA, XGA, UXGA
- Supports 3D
- Plug & play, easy to install and simple to operate
- No software installation required
- Contents: splitter, manual, power-supply





digital signage



Value®

	Order-No.	P.U.
VALUE HDMI Splitter, 4K2K, 2-way	14.99.3582	10

ROLINE HDMI Splitter, 4K

4K 2160p ULTRA HD

- Duplicates a HDMI video signal to 2/4 HDMI video signals with a 4K resolution
- Connectors: 1 HDMI Input (e.g. DVD-player), 2/4/8 HDMI outputs
- Supports 480i, 480p, 720i, 720p, 1080i, 1080p,3840 x 2160 (@60Hz)
- Supports VGA, SVGA, XGA, UXGA
- Supports 3D
- Plug & play, easy to install and simple to operate
- No software installation required
- Contents: splitter, manual, powersupply

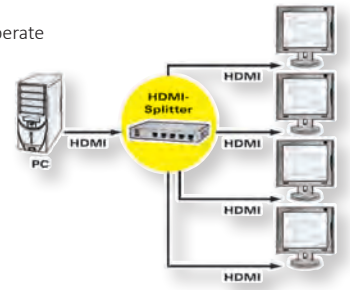

roline Designed for Professionals

digital signage



	Order-No. – P.U.
ROLINE HDMI Splitter, 4K, 2-way	14.01.3585 – 5
ROLINE HDMI-splitter, 4K, 4-way	14.01.3586 – 5

VALUE Display Port Splitter (Hub), 2 Ports

4K

- Offers solutions for digital entertainment center, conference room presentation, school and corporate training environments...
- This is a two ports DisplayPort hub, designed for transmitting signals from one DisplayPort source device to two DisplayPort displays
- This hub owns both SST and MST functions- which allow you to enjoy one picture with dual monitors or independent pictures on each monitor respectively
- Connected to earlier revisions of DisplayPort, the hub can act as a video splitter
- Support DisplayPort 1.2
- Max. resolution up to 4K@30Hz (3840x2160)
- HDCP 1.3 compliant
- EDID 1.4 compliant
- Power supply included in delivery (5 VDC, 2A)
- Contents: splitter, manual, power supply



Value

	Order-No. – P.U.
VALUE Display Port Splitter (Hub), 2 Ports	14.99.3590 – 5

ROLINE HDMI/VGA/DP to HDMI Switch / Converter

- High performance video adapter, which supports three types of input sources (HDMI / DP / VGA) and one HDMI output
- Ideal for multimedia applications
- Support maximum resolution up to 4K (HDMI or DP 3840x2160 @60Hz) and up to 1080p (VGA)
- Easy to install and simple to use
- Source selection by- auto detect / IR remote / Select button on the front panel
- LED Status
- Power adapter (5VDC, 1A)



roline Designed for Professionals

	Order-No. – P.U.
ROLINE HDMI/VGA/DP to HDMI Switch / Converter	14.01.3568 – 5

ROLINE HDMI/DisplayPort Switch

1080p FULL HD

Allows several HDMI and Display-Port sources to be connected to one HDMI display like e.g. a monitor, TV, projector.

- Connectors input 2/4-way: 2x HDMI Type A F, 2x DisplayPort F (2 ports, each with 1 HDMI connector and 1 DisplayPort connector, whereof only 1 connector can be used)
- Connector output: 1x HDMI F
- Supports 480p, 720p, 1080i and 1080p resolution, 1920 x 1080 (nominal)
- Selects input source via push button
- LED indication for source selection
- Plug & play, no software required
- HDCP supported
- Contents: Switch, power supply, manual

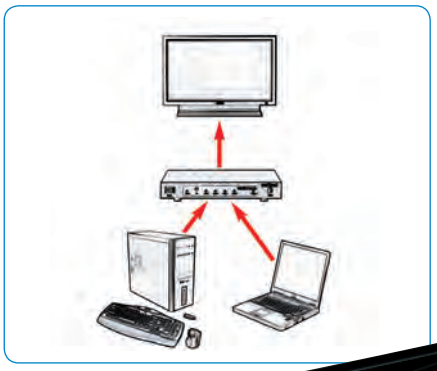



Technical Data:	14.01.3572	14.01.3574
Input:	1x HDMI A F/DisplayPort F* 1x HDMI A F/DisplayPort F*	2x HDMI A F 2x DisplayPort F
Output:	1x HDMI	1x HDMI
Max. resolution (nominal):	1920 x 1080	1920 x 1080
Dimensions (WxDxH):	157 x 65 x 20 m	157 x 65 x 20 m
Power supply:	5VDC; 2A	5VDC; 2A

*) 2 ports, each with 1 HDMI connector and 1 DisplayPort connector, whereof only 1 connector can be used

	Order-No. – P.U.
ROLINE HDMI/DisplayPort Switch, 2-way	14.01.3572 – 6
ROLINE HDMI/DisplayPort Switch, 4-way	14.01.3574 – 6

VALUE HDMI Switch, Automatic

3D capable | 1080p FULL HD

- Shows the Video output of 3 HDMI devices like e.g. DVD player, video camera or game console on one monitor
- Supports HDMI High Speed
- Video input can be switched automatically or by button on the switch
- Supports nominal resolution of up to 1920 x 1080
- Supports high-resolution display of up to 480p, 576p, 720p, 1080i, 1080p
- Supports uncompressed audio such as LPCM
- Supports compressed audio such as DTS Digital, Dolby Digital (incl. DTS-HD and Dolby True HD)
- No power supply needed
- Colour: Black
- Contents: HDMI switch



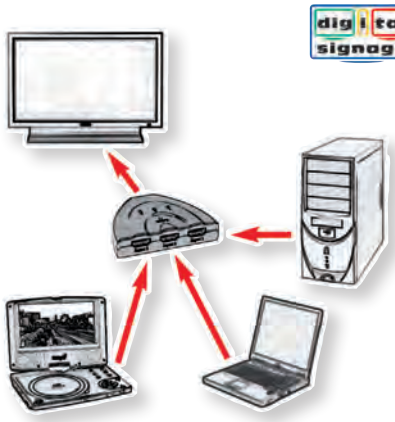

	Order-No. – P.U.
VALUE HDMI Switch, Automatic, 3-way	14.99.3565 – 5

ROLINE HDMI Switch, 4K, 3-way

4K | 2160p ULTRA HD

- Shows the Video output of 3 HDMI devices like e.g. DVD player, video camera or game console on one monitor
- Supports HDMI High Speed
- Video input can be switched automatically or by button on the switch
- Supports nominal resolution of up to 3840 x 2160@60Hz
- Supports high-resolution display of up to 480p, 576p, 720p, 1080i, 1080p,
- Supports uncompressed audio such as LPCM
- Supports compressed audio such as DTS Digital, Dolby Digital (including DTS-HD and Dolby True HD)
- Power supply needed (5VDC, 1A)
- Colour: Black
- Contents: HDMI switch

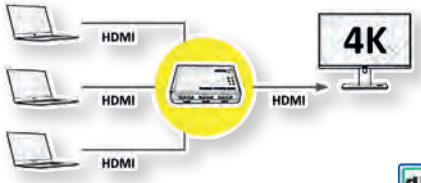





	Order-No. – P.U.
ROLINE 4K HDMI Switch, 3-way	14.01.3575 – 5

ROLINE HDMI 4x1 QUAD Multi-Viewer with Seamless Switch

1080p FULL HD

Displays the video output of up to 4 HDMI sources on a monitor or projector.

- Application example: A display device (monitor/TV/beamer) is powered by several HDMI sources such as BluRay players, etc. By pressing the button, the desired source can be selected for single display or up to four sources at a time using different display options. Or, if only one source is active at a time, the switch automatically changes to this source.
- Switching between PCs is done via buttons on the switch or via remote control
- Supports 1080p (1920x1080 @60Hz)
- Installation is possible without software- only the HDMI cables have to be connected to the Quad Multi Viewer.
- Flat, black metal housing
- Remote control and IR receiver included
- Power supply 12VDC; 2A included in delivery

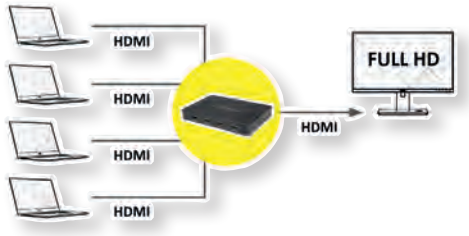

Technical data:

- Input: 4x HDMI A jack
- Output: 1x HDMI A jack
- Contents: HDMI Switch, main adapter, remote control

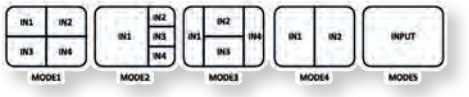





	Order-No. – P.U.
ROLINE HDMI 4x1 QUAD Multi-Viewer with Seamless Switch	14.01.3569 – 5

roline® Designed for Professionals

digital signage

ROLINE 4K HDMI Matrix Switch, 4 x 2, with Remote Control

4K 3D capable

- Four HDMI High Speed input signals can be switched to two HDMI High Speed output devices
- Outputs: 1x Toslink/SPDIF, 1x Stereo RCA
- Supports Ultra HD 4K@60Hz
- Max. resolution (nominal): 3840 x 2160 @60Hz
- Supports 480i, 480p, 720i, 720p,1080i and 1080p
- HDCP compatible
- Supports Blu-ray, UHD Blu-ray, satellite receiver, game consoles, PCs, etc.
- Supported digital audio formats: DTS-HD/Dolby-TrueHD/LPCM7.1/DTS/Dolby-Digital
- Input devices can be switched by IR remote control or by push buttons on the switch

- Contents: HDMI Matrix Switch, power supply, remote control, QIG



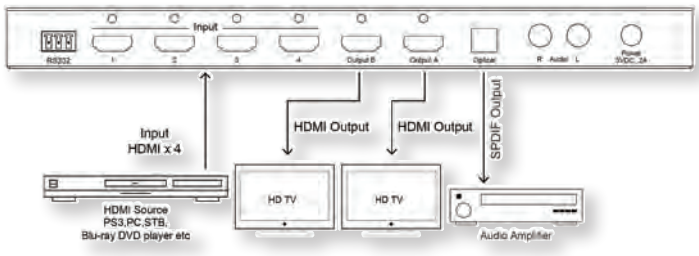

NEW



	Order-No. – P.U.
ROLINE 4K HDMI Matrix Switch, 4 x 2, with Remote Control	14.01.3579 – 1

roline® Designed for Professionals

VALUE / ROLINE Audio Adapters

roline® Designed for Professionals

Value®



		Order-No. – P.U.
VALUE 3.5mm Adapter, 1x 3.5mm M to 2x 3.5mm F	A	11.99.4440 – 100
VALUE 3.5mm Adapter, 1x 3.5mm M to 2x RCA F	B	11.99.4441 – 100
ROLINE 4 Conductor 3.5 mm Stereo Plug (speaker+microphone), 15 cm	C	11.09.4441 – 20
ROLINE 3.5 mm Stereo Coupler, F/F	D	11.09.4442 – 10
ROLINE Stereo Adapter 3.5 mm Male - 6.35 mm Female	E	11.09.4443 – 10
ROLINE Stereo Adapter 6.35 mm Male - 3.5 mm Female	F	11.09.4444 – 10
ROLINE Stereo Adapter 3.5 mm Male - 2.5 mm Female	G	11.09.4445 – 10
ROLINE Stereo Adapter 2.5 mm Male - 3.5 mm Female	H	11.09.4446 – 10

- Audio Y-cable for connection of a speaker/headphone with volume control
- Connectors:
  - 1x 3.5 mm stereo plug M, 3-pole, for connection to a speaker output, eg on the PC or iPod
  - 2x 3.5 mm jack, 3-pole, for connecting speakers or headphones
- Volume control for both lines, separately adjustable for each output line
- Length: 30 cm



roline® Designed for Professionals

	Order-No. – P.U.
ROLINE Y Audio Cable with 3.5 mm Stereo Plug (2x speaker lines)	11.09.4439 – 25

ROLINE HDMI 4K Audio Extractor LPCM 7.1

4K

The ROLINE HDMI 4K2K Audio Extractor allows to uncouple audio signals from the HDMI signal.
Not all monitors have good speakers. With the extractor you can redirect the audio signals via S/PDIF (optical) or analog via 3.5mm ports on a speaker system, the pure image signal goes to the screen.

- Supports HDMI, HDCP 1.2
- Audio-rate (sampling frequency for S/PDIF as HDMI) to 192kHz
- Supports high bit-rate audio
- Supports video resolution up 4K2K and 3D
- HBR audio supported
- Supports CEC bypass
- Supports up to 4 x 3.5 mm phone jacks for analog multi-channel audio outputs
- Power supply (5 V DC, 2 A) included
- Contents: extractor, power adapter, user manual

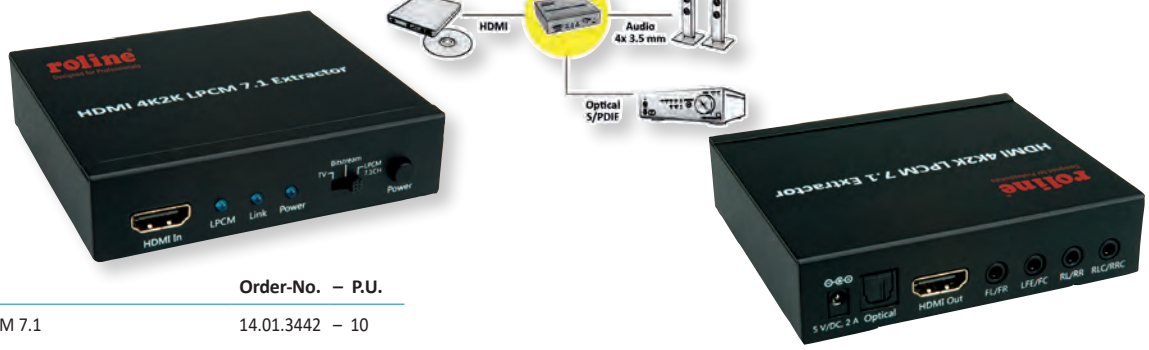

roline® Designed for Professionals

	Order-No. – P.U.
ROLINE HDMI 4K Audio Extractor LPCM 7.1	14.01.3442 – 10

VALUE Audio Converter Digital to Analogue

Connects a LCD TV, CD/DVD player or set-top box with digital output to an analogue amplifier with stereo input.

- Converts digital audio signals from Toslink (optical) or RCA (coaxial) to analogue Stereo 2x RCA
- Supports up to 24bit/96kHz
- Power supply included
- Contents: Audio converter, power supply, manual



Value®

	Order-No. – P.U.
VALUE Audio Converter - Digital to Analogue	14.99.3441 – 6

ROLINE Audio Converter Digital to Analogue

Connects a LCD TV, CD/DVD player or set-top box with digital output to an analogue amplifier with stereo input.

- Converts digital audio signals from Toslink (optical) or RCA (coaxial) to analogue Stereo 2x RCA
- Supports up to 24bit/192kHz
- Power supply included
- Contents: Audio converter, power supply, manual



roline® Designed for Professionals

	Order-No. – P.U.
ROLINE Audio Converter Digital to Analogue	14.01.3441 – 5

VALUE Headset

- Ideal device for multimedia applications and video conferencing
- With integrated microphone (not 15.99.1316)
- With volume control on the cable
- Connection to PC over 3.5 mm stereo plug
- Cable length: ca. 1.8 m



	Order-No. – P.U.
VALUE Stereo Headphone with Volume Control, light grey	15.99.1316 – 50

ROLINE Display Adapter, Virtual HDMI Emulator (EDID), 4K

- Works with any graphics card that has HDMI output and acts exactly the same as real LCD monitor
- Up to 4K resolution can be simulated, 3840x2160@60Hz
- Compliant with HDCP
- Compact design, small size
- Plug & Play
- Hot Plug
- No drivers, no configuration needed



	Order-No. – P.U.
ROLINE Display Adapter, Virtual HDMI Emulator (EDID), 4K	14.01.3416 – 30

VALUE A/V Modules

Multimedia connection system: computer, video, audio, control or network connections can be easily integrated with the modular multimedia connection system in switch programs. With the unsightly, lying around or hanging cables is now finally concluded. The system is cost-effective and future-proof as it can be expanded at any time to new interfaces.

25.99.8200 - VALUE A/V Faceplate, 86x86mm
- Triple gang, 86mm x 86mm
- White plastic triple gang frame
- Triple 44 x 66 mm wide aperture for 3 x 22mm modules
- Color: White



25.99.8201 - VALUE A/V Wall Cup, 86x86mm
- Flush wall mounted back boxes for AV wall plates
- The boxes are designed to be quickly fitted into partitioned walls (horizontally or vertically)
- Cable access points and standard fixing centres for face plates
- This AV back box is 42mm deep to allow most AV wall plates to fit
- Wall cup, 86mm x 86mm x 42mm
- Color: White



25.99.8202 - VALUE A/V Module (2xAudio, 1x Video)
- Ideal for home offices, conference rooms, classrooms, board rooms
- Plug-in installation on both sides of the plate, no soldering necessary
- Plus three phono connections for composite video plus audio
- Connection: RCA Composite Video Audio Male Jacks
- Color: White



25.99.8203 - VALUE A/V Module (HDMI F adapter,angled)
- Ideal for home offices, conference rooms, classrooms, board rooms
- Wall plate HDMI socket
- For use with HDMI cables
- This convenient wall plate has a female connector on the front and in back for easy installation
- The rear socket is aligned such that a side entry HDMI cable should pass through one of the side knock-outs in a wall cup (25.99.8201)



REMARK: Depending on the used plug size some modification may be necessary, no additional possibility for using another A/V module type in the same wall cup

25.99.8204 - VALUE A/V Module (USB 2.0 Type A)
- Ideal for home offices, conference rooms, classrooms, board Mount an external USB port quickly and easily with our USB face plates
- Easy to install
- Compliant USB 2.0
- Color: White
- 1 x USB-A Female



25.99.8205 - VALUE A/V Module - Blind plate
- Protects your wall mount from dust
- Easy to install and remove
- Color: White



25.99.8206 - VALUE Cable Exit Brush Wall Plate, 86x86mm
- Soft, densely packed Nylon bristles protect cable jackets from damage and prevent cables from falling behind the wall
- This single gang wall plate with brush bristles allows the cables running behind your walls to exit the wall and connect to your devices for neat professional look
- The aperture is large enough for VGA, HDMI, DVI, DisplayPort, Cat5e/6 and other types of cables





A + B + D + E + F





A + C + E + F

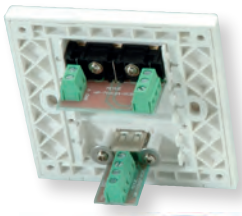

		Order-No. – P.U.
VALUE A/V Faceplate, 86x86mm, white	A	25.99.8200 – 20
VALUE A/V Wall Cup, 86x86mm, white	B	25.99.8201 – 5
VALUE A/V Module (2xAudio, 1x Video)	C	25.99.8202 – 20
VALUE A/V Module (HDMI F adapter,angled)	D	25.99.8203 – 20
VALUE A/V Module (USB 2.0 Type A)	E	25.99.8204 – 20
VALUE A/V Module - Blind plate	F	25.99.8205 – 20
VALUE Cable Exit Brush Wall Plate, 86x86mm	G	25.99.8206 – 10



UPS Systems / Power Distribution

7

Line-Interactive UPS . . . . . 7.02 – 7.03
Online UPS 7.03
Power Strips . . . . . 7.04 – 7.05
USB Wall Mount Chargers . . . . . 7.05 – 7.06
USB Power Stations 7.06
USB Car Chargers 7.07
Universal Power Adapters 7.07
IP Power Strip / Remote Switch 7.08
PDU for Cabinets 7.09
Power Cords . . . . . 7.10 – 7.14

VALUE UPS, Line-Interactive, USB Port



Quality Protection for Small Servers, Workstation & PC
- Line interactive design
- Boost and buck AVR (Auto voltage regulation)
- Fully digitized microprocessor controlled
- Energy saving function (UPS green mode)
- 50/60Hz frequency auto sensing and selection
- Cold start function (DC power on)
- Lightning and surge protection
- Short circuit and overload protection
- Advanced battery management (ABM technology)
- Tel/Modem internet surge suppression
- Smart USB communication port
- Automatically charging when UPS off
- History record of power failure events
- Back up, on-line, battery status, power status display by software
- Schedule shutdown & reboot
- Windows 98/Me/NT/2000/XP/2003/7/8/10
- Contents: UPS, Software, Cable-Set

Description	Output (VA/W)	Backup time	Dimensions (HxWxD)	Weight	Internal cooling	Order-No.	– P.U.
VALUE UPS, Line-Interactive, 400VA, USB Port	400 / 240	4 min	135 x 97 x 320 mm	4.5 kg	Passive	19.99.3424	– 1
VALUE UPS, Line-Interactive, 600VA, USB Port	600 / 420	4 min	135 x 97 x 320 mm	4.5 kg	Passive	19.99.3426	– 1
VALUE UPS, Line-Interactive, 800VA, USB Port	800 / 480	3 min	135 x 97 x 320 mm	6.5 kg	Passive	19.99.3428	– 1
VALUE UPS, Line-Interactive, 1200VA, USB Port	1200 / 720	3 min	192 x 382 x 130 mm	14 kg	Passive	19.99.3430	– 1

Special Battery for UPS Systems



- Maintenance free spare battery for all actual and former UPS models
- Spare battery for e.g. ROLINE, APC, EATON, VALUE, Fujitsu, Effekta, POWERWARE, AEG, FISKARS, BESTPOWER and others
- Contents: Battery

Description	Dimensions (HxWxD)	Weight	Order-No.	– P.U.
Special Battery for UPS 12V 7Ah	100x65x155 mm	2.6 kg	19.49.1207	– 1
Special Battery for UPS 12V 9Ah	100x65x155 mm	3 kg	19.49.1209	– 1
Special Battery for UPS 12V 12Ah	100x100x155 mm	3.9 kg	19.49.1212	– 1
Special Battery for UPS 12V 17Ah	167x76x181 mm	5.8 kg	19.49.1217	– 1
Special Battery for UPS 12V 5Ah	107x70x90 mm	1.8 kg	19.49.1205	– 1

ROLINE LineSecure / LineSecure II – Line Interactive UPS

LineSecure UPS's work with the „buck & boost" line interactive technology; used when reliable protection against strong voltage fluctuations is essential. Protect against: power failure, power sag, power surge, under voltage, over voltage.



Product features:
- Compact, quiet, user-friendly
- Desktop and 19" RM models
- Short circuit and overload protection
- AVR (Automatic Voltage Regulation)
- ABM (Automatic Battery Management) increases battery life up to 50%
- Telephone/Modem connections
- Shutdown software including License for 1 server
- Serial Port for advanced Power Management Software (incl. in content of delivery)
- UPS Management Software : Windows NT/ 2k / XP / 7 / 8 / 10 / Server 2003 / 2008 / 2012 x86/x64, MAC OS X (Intel) 10.6.x, 10.7.x, 10.8.x Mountain Lion, 10.9.x MavericksMAC OS
- Contents: UPS, Software, Cable Set

Description	Output (VA/W)	Backup time	Dimensions (HxWxD)	Weight	Internal cooling	Order-No.	– P.U.
ROLINE LineSecure1000	1000 / 700	3 min	210 x 140 x 436 mm	15 kg	Active, fan	19.40.1110	– 1
ROLINE LineSecure1500	1500 /960	3 min	226 x 170 x 450 mm	6.9 kg	Active, fan	19.40.1115	– 1
ROLINE LineSecure 1000R	1000 / 670	3 min	84 x 483 x 430 mm	20 kg	Active, fan	19.40.1111	– 1
ROLINE LineSecure 1500R	1500 / 960	3 min	130 x 483 x 381 mm	25 kg	Active, fan	19.40.1116	– 1
ROLINE LineSecure II 1000	1000 / 700	3 min	210 x 140 x 436 mm	15 kg	Active, fan	19.40.1112	– 1
ROLINE LineSecure II 1500	1500 /960	3 min	226 x 170 x 450 mm	6.9 kg	Active, fan	19.40.1117	– 1
ROLINE LineSecure II 2000	2000 /1300	3 min	226 x 170 x 450 mm	30 kg	Active, fan	19.40.1120	– 1
ROLINE LineSecure II 1000R	1000 / 670	3 min	84 x 483 x 430 mm	20 kg	Active, fan	19.40.1113	– 1
ROLINE LineSecure II 1500R	1500 / 960	3 min	130 x 483 x 381 mm	25 kg	Active, fan	19.40.1119	– 1
ROLINE LineSecure II 2000R	2000 / 1300	3 min	130 x 483 x 381 mm	29 kg	Active, fan	19.40.1121	– 1
ROLINE UPS 19'' Rail Kit 2/3U 58-90 cm			58-90 cm, 2 UH	0.4 kg		19.40.2177	– 1

ROLINE DesignSecure – Line Interactive UPS

- Compact designed UPS in futuristic design
- For Workstations and PCs
- LineInteractive UPS
- AVR (Automatic Voltage Regulation)
- Digital status display
- Integrated overvoltage protection
- Telephone/Modem connections
- USB Port for advanced Power Management Software (incl, in content of delivery)
- EMI/RFI Noise Filter
- Dimensions (HxLxW) 168 x 105 x 334 mm
- Backup Time: up to 4 Minutes
- Contents: UPS, Software, Cable Set

Technical data:
Input:
Voltage: 230 V +/- 25%
Frequency: 50 Hz +/- 10% (automatic detection)
Breaker or protection for overload and short cirquit
Automatic UPS shut down in case of overload
Output (battery mode):
Voltage: simulated sinus at 230 V +/- 5%
Frequency: 50 Hz +/-1Hz
Cirquit time: 2/4 milliseconds reaction time
Voltage regulation (AVR): 9% - 25% to nominal voltage
Telephone protection
Short cirquit protection



Description	Output (VA/W)	Backup time	Dimensions (HxWxD)	Weight	Internal cooling	Order-No. – P.U.
ROLINE DesignSecure 525	525/315	3 min	168 x 105 x 334 mm	5.8 kg	Passive	19.40.1205 – 1
ROLINE DesignSecure 625	625/375	3 min	168 x 105 x 334 mm	6.4 kg	Passive	19.40.1206 – 1
ROLINE DesignSecure 825	825/495	2 min	168 x 105 x 334 mm	6.3 kg	Passive	19.40.1208 – 1
ROLINE DesignSecure 1200	1200/720	3 min	168 x 105 x 334 mm	14 kg	Passive	19.40.1212 – 1
ROLINE DesignSecure 2000	2000 / 1200	2 min	192 x 130 x 382 mm	16 kg	Passive	19.40.1220 – 1

ROLINE ProSecure II / III – Online UPS

The ROLINE ProSecure Series - for optimum power protection is a truly state of the art online double conversion UPS, ideal for all essential computer systems and servers. Protects against: power failure, power sag, power surge, under voltage, over voltage, switch transient, line noise, frequency variation, harmonic distortion.



Product features:
- Cold start function (DC power on)
- Lightning and surge protection
- Battery replacement warning
- Emergency Power Off function
- Battery remain time display
- LCD display front panel
- Power factor correction
- Support USB communication
- Multiple language LCD display
- On line output voltage selected
- Hot swappable battery by user
- True on-line technology provides all power protection
- Pure sine-wave output with less than 3% THD
- Fully digitized microprocessor controlled
- Short Circuit and overload protection
- Advanced management (ABM)

- Automatic battery charge in UPS off mode
- Automatic diagnostics & battery check
- RS-232 communication port with monitoring software
- Network/fax/modem surge protection
- Extended back up time with battery pack
- Load segmentation receptacles controllable
- High efficiency mode selectable
- Fan speed auto control when loads varies
- UPS Management Software:
  Windows NT/ 2k / XP / 7 / 8 / 10 / Server 2003 / 2008 / 2012 x86/x64, MAC OS X (Intel) 10.6.x, 10.7.x, 10.8.x Mountain Lion, 10.9.x MavericksMAC OS
- Contents: UPS, Software, Cable Set





Technical data:
Input:
Input voltage range: 160 VAC - 276 VAC
Frequency: 50 Hz
Input power factor: 0.97
Freq. window from mains: 45 - 65 Hz
Synchronization window: ± 3 Hz
Output:
Output voltage: 208/220/230/240 VAC, selectable from LCD panel
Voltage regulation: ± 2%
Voltage distortion: < 5% THD at full non-linear load, < 3% THD at full linear load
Overload capacity: 100 - 125% 1 min., 125 - 150% 10 sec
Efficiency: greater than 86%

Description	Output (VA/W)	Backup time	Dimensions (HxWxD)	Weight	Internal cooling	Order-No. – P.U.
ROLINE ProSecure II 700 - Online UPS	700 / 490	5 min	235 x 155 x 410 mm	15 kg	Active, fan	19.40.1081 – 1
ROLINE ProSecure II 1000 - Online UPS	1000 / 700	6 min	235 x 155 x 410 mm	16 kg	Active, fan	19.40.1082 – 1
ROLINE ProSecure II 1500 - Online UPS	1500 / 1050	5 min	235 x 155 x 410 mm	20 kg	Active, fan	19.40.1083 – 1
ROLINE ProSecure II 2000 - Online UPS	2000 /1400	6 min	365 x 216 x 405 mm	31 kg	Active, fan	19.40.1084 – 1
ROLINE ProSecure II 3000 - Online UPS	3000 / 2100	5 min	365 x 216 x405 mm	37 kg	Active, fan	19.40.1085 – 1
ROLINE ProSecure II 700 RM1U - Online UPS, 19“ Rack Version	700 /490	4 min	44 x 428 x 610 mm; 1 UH	16 kg	Active, fan	19.40.1086 – 1
ROLINE ProSecure II 1000 RM1U - Online UPS, 19“ Rack Version	1000 / 700	2 min	44 x 428 x 610 mm; 1 UH	16 kg	Active, fan	19.40.1087 – 1
ROLINE ProSecure II 700 RM2U - Online UPS, 19“ Rack Version	700 / 490	6 min	88 x 428 x 425 mm; 2 UH	16 kg	Active, fan	19.40.1088 – 1
ROLINE ProSecure II 1000 RM2U - Online UPS, 19“ Rack Version	1000 / 700	5 min	88 x 428 x 425 mm; 2 UH	17 kg	Active, fan	19.40.1089 – 1
ROLINE ProSecure II 1500 RM2U - Online UPS, 19“ Rack Version	1500 / 1050	5 min	88 x 428 x 425 mm; 2 UH	18 kg	Active, fan	19.40.1090 – 1
ROLINE ProSecure II 2000 RM2U - Online UPS, 19“ Rack Version	2000 / 1400	6 min	88 x 428 x 610 mm; 2 UH	32 kg	Active, fan	19.40.1091 – 1
ROLINE ProSecure II 3000 RM2U - Online UPS, 19“ Rack version	3000 / 2100	5 min	88 x 428 x 610 mm; 2 UH	32 kg	Active, fan	19.40.1092 – 1
ROLINE ProSecure III 1000 - Online UPS	1000 / 900	3 min	238 x 152 x 420 mm	14 kg	Active, fan	19.40.1062 – 1
ROLINE ProSecure III 1500 - Online UPS	1500 / 1350	5 min	235 x 155 x 410 mm	20 kg	Active, fan	19.40.1063 – 1
ROLINE ProSecure III 2000 - Online UPS	2000 /1800	3 min	358 x 225 x 420 mm	31 kg	Active, fan	19.40.1064 – 1
ROLINE ProSecure III 3000 - Online UPS	3000 / 2700	5 min	365 x 216 x405 mm	37 kg	Active, fan	19.40.1065 – 1
ROLINE ProSecure III 1000 RM2U - Online UPS, 19“ Rack Version, black	1000 / 900 @ Pf. 0,9	3 min	88 x 428 x 425 mm; 2 UH	17 kg	Active, fan	19.40.1069 – 1
ROLINE ProSecure III 1500 RM2U - Online UPS, 19“ Rack Version, black	1500 / 1350 @ Pf. 0,9	3 min	88 x 428 x 425 mm; 2 UH	18 kg	Active, fan	19.40.1070 – 1
ROLINE ProSecure III 2000 RM2U - Online UPS, 19“ Rack Version, black	2000 / 1800 @ Pf. 0,9	3 min	88 x 428 x 610 mm; 2 UH	32 kg	Active, fan	19.40.1071 – 1
ROLINE ProSecure III 3000 RM2U - Online UPS, 19“ Rack Version, black	3000 / 2700 @ Pf. 0,9	3 min	88 x 428 x 610 mm; 2 UH	33 kg	Active, fan	19.40.1072 – 1

VALUE / ROLINE Power Strips

- 3/6-way power strip with plastic housing
- With or without switch
- Sockets are 45° rotated
- Colour: white / black

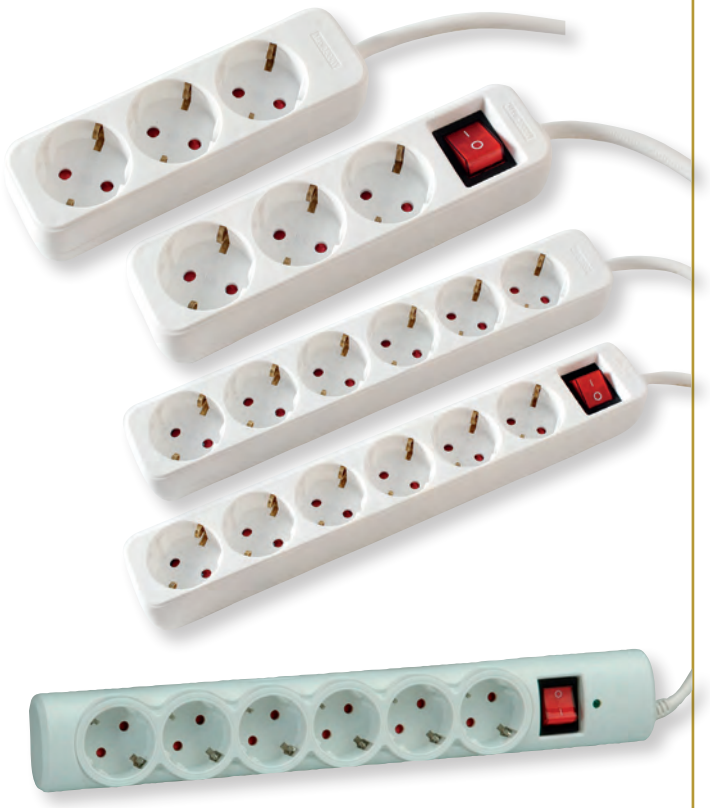

	Order-No.	P.U.
VALUE Power Strip, 3-way, white, 1.5 m	19.99.1072	20
VALUE Power Strip, 3-way, white, 3.0 m	19.99.1073	10
VALUE Power Strip, 3-way, with Switch, white, 1.5 m	19.99.1076	20
VALUE Power Strip, 3-way, with Switch, white, 3.0 m	19.99.1077	10
VALUE Power Strip, 3-way, with Switch, white, 6.0 m	19.99.1078	10
VALUE Power Strip, 3-way, with Switch, white, 10.0 m	19.99.1079	10
VALUE Power Strip, 6-way, white, 1.5 m	19.99.1080	20
VALUE Power Strip, 6-way, white, 3.0 m	19.99.1081	10
VALUE Power Strip, 6-way, with Switch, white, 1.5 m	19.99.1084	20
VALUE Power Strip, 6-way, with Switch, white, 3.0 m	19.99.1085	10
VALUE Power Strip, 6-way, with Switch, white, 6.0 m	19.99.1086	10
VALUE Power Strip, 6-way, with Switch, white, 10.0 m	19.99.1087	10
VALUE Power Strip, 3-way UTE, white, 3 m	19.99.1048	1
VALUE Power Strip, 6-way UTE, white, 3 m	19.99.1049	1
VALUE Power Strip, 6-way, with Switch, Surge Protection, white	19.99.1071	20



	Order-No.	P.U.
ROLINE Power Strip, 3-way, black, 1.5 m	19.07.1066	20
ROLINE Power Strip, 3-way, black, 3 m	19.07.1067	10
ROLINE Power Strip, 3-way, with Switch, black, 1.5 m	19.07.1068	20
ROLINE Power Strip, 3-way, with Switch, black, 3 m	19.07.1069	10
ROLINE Power Strip, 3-way, with Switch, black, 6 m	19.07.1070	10
ROLINE Power Strip, 3-way, with Switch, black, 10 m	19.07.1071	10
ROLINE Power Strip, 6-way, black, 1.5 m	19.07.1072	20
ROLINE Power Strip, 6-way, black, 3 m	19.07.1073	10
ROLINE Power Strip, 6-way, with Switch, black, 1.5 m	19.07.1074	20
ROLINE Power Strip, 6-way, with Switch, black, 3 m	19.07.1075	10
ROLINE Power Strip, 6-way, with Switch, black, 6 m	19.07.1076	10
ROLINE Power Strip, 6-way, with Switch, black, 10 m	19.07.1077	10

roline®
Designed for Professionals

VALUE Power Strip, 6-way UTE, with Switch

- 6-way power strip with plastic housing
- Sockets are 45° rotated
- With illuminated 2-pole rocker switch
- Colour: white



	Order-No.	P.U.
VALUE Power Strip, 6-way UTE, with Switch, white, 1.5 m	19.99.1030	1

ROLINE Power Strip

- 6 AC outlets, rotated 45°
- 5 standard sockets plus 1 „block space“ socket
- 10 A resettable circuit breaker
- 1-pole rocker switch, lighted
- Max. load 10 A 230 V
- Power cord 1.8 m length, with right angle power plug



roline®
Designed for Professionals

	Order-No. – P.U.
ROLINE Power Strip, 6-way	19.07.1601 – 20
ROLINE Power Strip, 6-way, Surge Protection	19.07.1606 – 20

VALUE Clamp-On Power Strip Holder

- Suitable next to desktops, multimedia systems, etc.
- For an organized desktop/office
- Clamp-On power strip holder
- Clamps onto surfaces up to 50 mm thickness
- Width adjustment range of the kept devices: min. 50mm- max. 70mm
- Silicone pads prevent the mounted device from scratching and accidental dropping (e.g. secure hold of power strip...)
- Cable management



	Order-No. – P.U.
VALUE Clamp-On Power Strip Holder, white	19.99.3230 – 10

VALUE USB Wall Chargers

For powering a smartphone/tablet, external SSD/HDD or other devices

- For charging or as a power supply from a device via its USB input
- Perfect supplement for your Wireless Charger, as the scope of delivery often does not include plug-in power supplies
- Suitable, for example, for smartphone/tablet, external SSD/HDD enclosures and other devices
- Charger with one USB Type A socket
- Matt black PVC housing and Euro flat plug

Technical data
- Plug-in power supply
- Input voltage: 100- 240V AC, 50- 60Hz



A



B



C

Technical data:	19.99.1038	19.99.1092	19.99.1093	19.99.1064	19.99.1091
Input:	100 - 240 VAC	100 - 240 VAC	100 - 240 VAC	100 - 240 VAC	100 - 240 VAC
Output:	1x USB A F	1x USB A F	1x USB A F	2x USB A F	1x USB A F 1x USB C
	5V 2.4A	3.6V-6.5V/3A, 6.5V-9V/2A, 9V-12V/1.5A (max. 18 W)	5V / 2.4A	5V / 2A	3.6V-6.5V/3A, 6.5V-9V/2A, 9V-12V/1.5A (max. 18 W) 5V / 3A
Power (max.):	10W	18W	12W	10W	33W
Dimensions:	50 x 28 x 48 mm	36 x 24 x 84 mm	36 x 24 x 84 mm	46 x 28 x 85 mm	50.5 x 29 x 71 mm
Additional features		QC 3.0 (Quick Charge)			QC 3.0 (Quick Charge) Power Delivery



D



E

		Order-No. – P.U.
VALUE USB Wall Charger, 1-Port, 10W	A	19.99.1038 – 20
VALUE USB Wall Charger, 1-Port, QC3.0, 18W	B	19.99.1092 – 10
VALUE USB Wall Charger, 1-Port, 12W	C	19.99.1093 – 10
VALUE USB Wall Charger, 2-Ports, 10W	D	19.99.1064 – 20
VALUE USB Wall Charger, 2-Ports (1x QC3.0, 1x USB C), 33W	E	19.99.1091 – 10

ROLINE USB Wall Chargers

For charging or powering a device via its USB input.
- For charging of mobile devices (tablets / smartphones)
- Quick Charge 3.0 supported (19.11.1018 / 1032 / 1061 QC3.0)
- Multi-Protection: Over Current / Short Circuit / Over Voltage Protection
- Compact Design
- PowerIQ technology- identifies what kind of device is plugged into and delivers the proper voltage/amperage
- Input: 100- 240 V AC, 50- 60 Hz

Technical data:	**19.11.1023**	**19.11.1018**
Input:	100 - 240 VAC	100 - 240 VAC
Output:	1x USB C F	2x USB A F (5V; 2.4A)
	3.3-5.9V/3A, 3.3-11V/2A; 5V/3A, 9V/2A, 12V/1.5A	5V/2,4A - 3A, 9V-3A, 12V/3A, 15V/3A, 20V/3A, 20,3V/3A
Power (max.):	18W	61W
Dimensions:	37 x 24 x 82 mm	55 x 29 x 88 mm
Additional features	QC 4.0 (Quick Charge)	QC 3.0 (Quick Charge)

A



Technical data:	**19.11.1061**	**19.11.1032**
Input:	100 - 240 VAC	100 - 240 VAC
Output:	1x USB A F	1x USB A F 1x USB C
	3.6V-6.5V/3A,6.5V-9V/2A, 9V-12V/1.5A (max. 18W)	3.6V-6.5V/3A,6.5V-9V/2A, 9V-12V/2A (max. 24 W) 5V 3A / 9V 3A / 15V 2A / 20V 1.5A
Power (max.):	18W	49.5W
Dimensions:	40 x 30 x 53 mm	63.6 x 62.2 x 28.5mm
Additional features	QC 3.0 (Quick Charge)	QC 3.0 (Quick Charge) Power Delivery

B



roline®
Designed for Professionals

C



D



		Order-No. – P.U.
ROLINE Power Wall Charger, 1x Type C, QC4.0, 18W	A	19.11.1023 – 10
ROLINE Power Wall Charger, 1x Type C PD/QC3.0, 61W	B	19.11.1018 – 10
ROLINE Power Wall Charger, 1x USB A, QC3.0, 18W	C	19.11.1061 – 10
ROLINE Power Wall Charger, 2x USB, 1x QC3.0 + 1x C (PD), 49.5W	D	19.11.1032 – 10

ROLINE USB Charging Station

- For charging smart phones, tablet PCs (e. g. iPad), MP3 players ...
- Power and charge up to 7 devices at once in one convienent location on your desktop, counter top, lobby, or waiting room.
- Perfect for home or office use, most cell phones and tablets fit in station's slots without removing protective cases (slot widths- 19mm)
- 7 Powered USB Ports (5x 2.4A)- Simply connect your own charging cable and the charging station will charge up to 7 devices, including smartphones and high-powered devices such as tablets
- Organize up to 7 devices- 7 slots with anti-scratch silicone pads organize your devices even with the cases still on
- Surge protection on each port
- Built-in smart charging chipset provides and determines the charge needed for your device, delivering a steady and safe charge
- Power in a compact space
- Power Supply: 19VDC; 3.4A
- Output: 7x 2.4A
- Contents: USB charger, power adapter

roline®
Designed for Professionals



Technical data:	19.07.1051
Number of ports:	7
Output:	7x USB 2.0 A, F
Input Voltage:	100 - 240V AC, 50 - 60Hz
Output Voltage:	5VDC
Power Output rate:	7x 5V DC 2.4A
Colour:	black
Material (housing):	plastic

	Order-No. – P.U.
ROLINE USB Charging Station, 7 Port	19.07.1051 – 10

Universal Wall Power Supply

For small devices as battery alternative or spare part

- Input: 230V/50 Hz
- Output: 500 mA
- Conncection cable length: 1.5 m
- Voltage (VDC): 3 / 4.5 / 6 / 7.5 / 9 / 12 selectable with sliding switch
- Polarity +/- reversible (with plug adaptor)
- Contents: Power Suply Unit with 6 removable plugs (3.5 / 1.4x4 / 2.1x5 / 2.5x5.5 / 0.75x2.5 / 35x3.5 mm)



	Order-No. – P.U.
Universal Wall Power Supply 500mA	19.11.1097 – 1
Universal Wall Power Supply 1000mA	19.11.1098 – 1

ROLINE USB Charger, C5 Connection, 1x Type C Port, 65W

For charging or as power supply of a device via USB type C - with up to 65W!

- For charging devices with USB Type C socket such as MacBooks, Ultrabooks, Notebooks, Laptops, NUCs, Tablets or even Smartphones
- Perfect for on the go: simply use any cable with C5 plug and country-specific connection
- Supports USB PD (Power Delivery) function on output port
- Protection: Current / short-circuit / overvoltage protection
- Compact design, black housing and cable
- Input: 100- 240V AC, 50-60Hz
- Output: 5V-3A, 9V-3A, 12V-3A, 15V-3A, 20V-3,25A (max. 65 W)

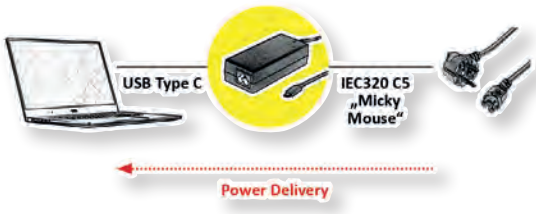



roline®
Designed for Professionals

	Order-No. – P.U.
ROLINE USB Charger, C5 Connection, 1x Type C Port, 65W	19.11.1034 – 10

VALUE USB Charger with Car Plug

Easily charge your smartphone or other USB devices in the car or power mobile navigation devices

- Car plug
- Input voltage: DC 12V- 24V
- Contents:car charger

19.99.1039



Value®

19.99.1059



Technical data:	19.99.1039	19.99.1059	19.07.1054
Input:	12-24 V DC, 2.1A max.	12-24 V DC, 2.1A max.	12-24 V DC
Output:	2x USB Type A F (1x QC3.0)	2x USB Type A F	2x USB A F
Power:	18W 1x 3.6-6.5VDC 3A, 6.5-9VDC 2A, 9V-12VDC 1A 1x 5V DC 2.4A	10W (5VDC; .12A)	15,5W (5VDC;3,1A)
Dimensions:	33 x 53mm	33 x 35mm	33 x 60 mm



roline®
Designed for Professionals

19.07.1054

	Order-No. – P.U.
VALUE USB Charger with Car Plug, 2-Port (1x QC3.0, 1x 5VDC 2.4A), 18W	19.99.1039 – 20
VALUE USB Car Charger, 2 Port, 10W	19.99.1059 – 20
ROLINE USB Car Charger, 2 Port, 15W	19.07.1054 – 10

VALUE IP Power Strip

DATA CENTER Product

The VALUE IP power strip provides the on/off-switching of electrical devices over a TCP/IP network. Easily connect the VALUE IP power strip to a power supply system and the network. After allocating a free IP address, every single port can be independantly switched with every common webbrowser.

- For installation in a 19“ cabinet, hight: 1U
- Easy and quick plug & play installation
- Easy and flexible configuration over a webbrowser
- IP adress fix or over DHCP
- Built-in temperature and humidity sensor to monitor your used infrastructure
- Setting of the circuit delay time for On/Off function of each C13 port to prevent the impact of power surge to the system
- LED indication for power status of every port
- Digital display for total power
- Automatic circuit breaker protection

- Technical data:
  Connections: RJ-45, Ethernet 10/100Mbit, front side
  Output: 8x IEC320 C13 (10A)
  Input: 1x IEC320 C20 (16A)
  Rocker switch: Back side, lighted, 2-pole
  Indication: 8 LEDs
  Protocol: http
  Addressing: DHCP or constant IP address
  Dimensions (WxDxH): 430 x 90 x 44
- Contents:IP power bar



	Order-No.	– P.U.
VALUE IP Power Strip, 8-way	19.99.3420	– 1

ROLINE 19“ Automatic Transfer Switch, 2x C20 to 6x C13/2x C19, 16A

DATA CENTER Product

The Automatic Transfer Switch (ATS) is a high availability device designed for providing redundant power for sensitive electronic equipment. Powered by two independent power sources, it makes a rapid switch from one source to the other automatically, when the power supply used to power its connected load fails.

- The ATS- Automatic Transfer Switch- has two main supplies that provide redundant power to connected IT equipment
- Designed to supply power from the primary source „A“. If this source is unavailable for any reason, the device will automatically switch to the secondary source „B“, with no interruption to the connected equipment
- Once the primary source „A“ is available again, it will automatically switch back, again without interruption to the equipment
- Robust steel construction
- 2x C20 16A inlets
- 2x C19 16A outlets
- 6x C13 10A unswitched sockets
- 19“ horizontal rack mounting 1U (44.4mm) high
- 16A max. rated. 220- 240VAC 50Hz

- Contents: User manual, 2x Input cables: C19-C20, 2x Input cable lockers, SNMP card, accessories for rack installation





	Order-No.	– P.U.
ROLINE 19“ Automatic Transfer Switch, 2x C20 to 6x C13/2x C19, 16A	19.07.1625	– 1

roline®
Designed for Professionals

ROLINE PDU for Cabinets

DATA CENTER Product

- 19“ socket (1UH) for installation in 19“ cabinets, incl. installation angle
- Arrangement of sockets: 45 °
- Profile of anodized aluminium

- Cable type: 2.0m H05VV-F 3G 1,50mm², black
- Max load/power: 16A 3600W; VDE / GS tested
- Color: ALU / light gray RAL 7035
- Width: 440mm

roline®
Designed for Professionals

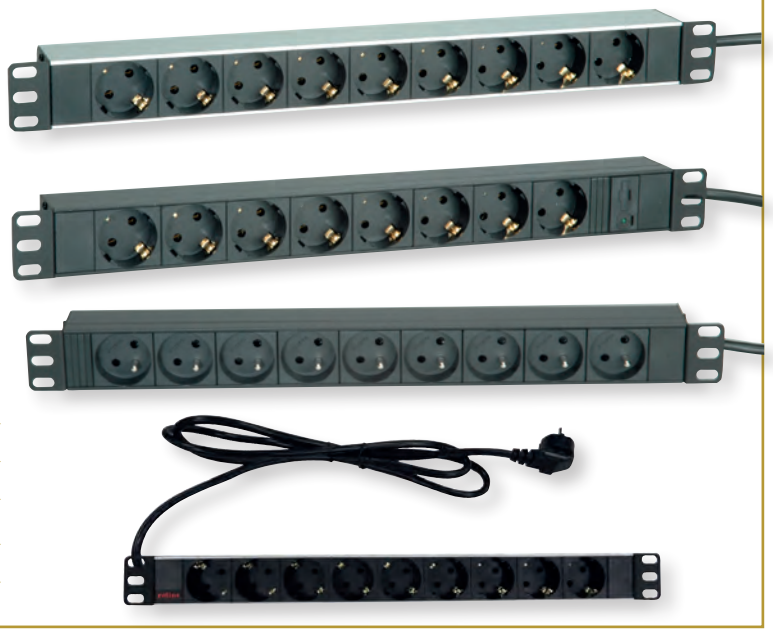

	Order-No. – P.U.
ROLINE PDU for Cabinet, 9x socket, 45°, 16A, Aluminium, 2m	19.07.1620 – 10
ROLINE PDU for Cabinet, 9x socket, 45°, 16A, black, 2m	19.07.1621 – 10
ROLINE 19“ PDU for Cabinet 8x 2300W, IEC320 C14 M, Aluminium, 2m	19.07.1622 – 10
ROLINE 19“ PDU for Cabinet 8x 2300W, IEC320 C14 M, black, 2m	19.07.1623 – 10
ROLINE 19“ PDU for Cabinet 9x socket, 45°, 16A, UTE Version, black, 2m	19.07.1624 – 10

ROLINE 19“ PDU for Cabinets 8x 2300W, UTE Version, IEC320 C14 M

DATA CENTER Product

- 19 „socket (1UH) for installation in 19“ cabinets, incl. installation angle
- Arrangement of sockets: 45°
- Profile of anodized aluminium

- Cable type: 2.0m H05VV-F 3G 1mm², black
- Max load/power: 10A 2300W; VDE / GS tested
- Color: black
- Width: 440mm

roline®
Designed for Professionals





	Order-No. – P.U.
ROLINE 19“ PDU for Cabinets 8x 2300W, UTE Version, IEC320 C14 M, black, 2.0 m	19.07.1626 – 10

ROLINE 19“ PDU for Cabinets 8x IEC320 C13 - C20 / German Type / C14

DATA CENTER capable

- 19“ socket (1UH) for installation in 19“ cabinets, incl. installation angle
- Arrangement of sockets: 90°
- Profile of anodized aluminium

- Cable type:
  2.0m H05VV-F 3G 1mm² (19.07.1629) ,
  2.0m H05VV-F 3G 1.5mm² (19.07.1627/19.07.1628) black
- Max load/power:
  10A 2300W (19.07.1629)
  16A 3600W (19.07.1627 / 19.07.1628)
- Color: ALU / light gray RAL 7035
- Width: 440mm

roline®
Designed for Professionals

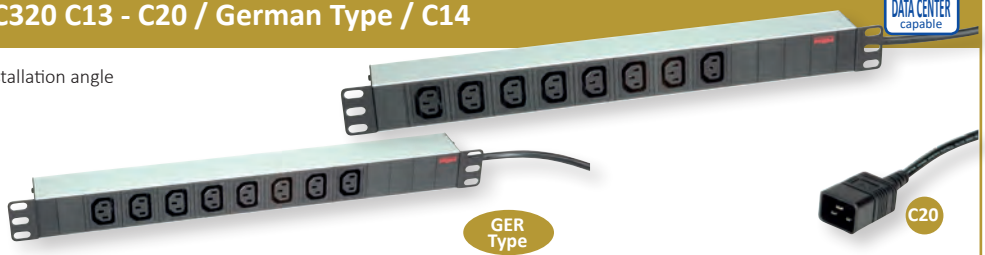

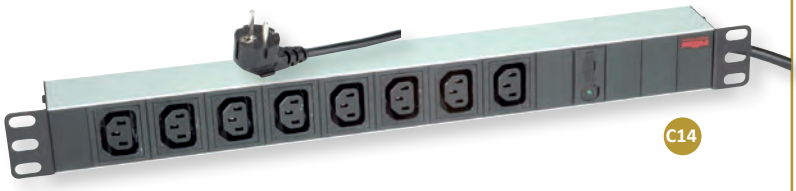

	Order-No. – P.U.
ROLINE 19“ PDU for Cabinets 8x 2300W, IEC320 C13 - C20 M, Aluminium, 2.0 m	19.07.1627 – 10
ROLINE 19“ PDU for Cabinets 8x 3600W, IEC320 C13 - German Type M, Aluminium, 2.0 m	19.07.1628 – 10
ROLINE 19“ PDU for Cabinets 8x 3600W, IEC320 C13 - C14 M, 10 A Fuse, Aluminium, 2.0 m	19.07.1629 – 10



VALUE / ROLINE Monitor Power Cables, IEC 320 C14 - C13

- Monitor power cable with moulded plugs
- Connectors: IEC 320-C14 plug to IEC 320-C13 plug
- Nominal data: 250V AC/10A

	Order-No.	P.U.
VALUE Monitor Power Cable, IEC 320 C14 - C13, black, 0.5 m	19.99.1505	20
VALUE Monitor Power Cable, IEC 320 C14 - C13, black, 1 m	19.99.1510	20
VALUE Monitor Power Cable, IEC 320 C14 - C13, black, 1.8 m	19.99.1515	50
VALUE Monitor Power Cable, IEC 320 C14 - C13, black, 3 m	19.99.1530	50
ROLINE Monitor Power Cable, IEC 320 C14 - C13, black, 0.5 m	19.08.1505	50
ROLINE Monitor Power Cable, IEC 320 C14 - C13, black, 1 m	19.08.1510	30
ROLINE Monitor Power Cable, IEC 320 C14 - C13, black, 1.8 m	19.08.1515	50
ROLINE Monitor Power Cable, IEC 320 C14 - C13, black, 3 m	19.08.1530	50
VALUE Monitor Power Cable, IEC 320 C14 - C13, white, 1.8 m	19.99.1516	50
ROLINE Monitor Power Cable, IEC 320 C14 - C13, red, 0.8 m	19.08.1525	25
ROLINE Monitor Power Cable, IEC 320 C14 - C13, red, 1.8 m	19.08.1520	25
ROLINE Monitor Power Cable, IEC 320 C14 - C13, red, 3 m	19.08.1531	25
ROLINE Monitor Power Cable, IEC 320 C14 - C13, yellow, 0.8 m	19.08.1526	25
ROLINE Monitor Power Cable, IEC 320 C14 - C13, yellow, 1.8 m	19.08.1521	25
ROLINE Monitor Power Cable, IEC 320 C14 - C13, yellow, 3 m	19.08.1532	25
ROLINE Monitor Power Cable, IEC 320 C14 - C13, blue, 0.8 m	19.08.1527	25
ROLINE Monitor Power Cable, IEC 320 C14 - C13, blue, 1.8 m	19.08.1522	25
ROLINE Monitor Power Cable, IEC 320 C14 - C13, blue, 3 m	19.08.1533	25
ROLINE Monitor Power Cable, IEC 320 C14 - C13, green, 0.8 m	19.08.1528	25
ROLINE Monitor Power Cable, IEC 320 C14 - C13, green, 1.8 m	19.08.1523	25
ROLINE Monitor Power Cable, IEC 320 C14 - C13, green, 3 m	19.08.1534	25



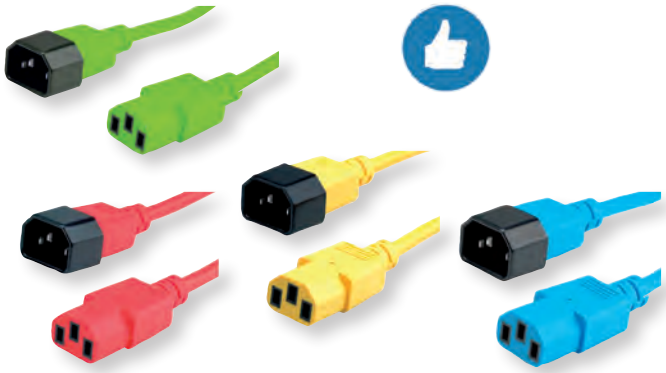

VALUE Power Cables, straight IEC Conncector

Cable with safety plug 90° angulate (Schuko plug) and IEC 320-C13

- Plugs: Schuko plug to C13 plug
- Nominal data: 250V AC/2.5A

0

		Order-No.	P.U.
VALUE Power Cable, straight IEC Conncector, black, 0.6 m	A	19.99.1017	50
VALUE Power Cable, straight IEC Conncector, black, 1.8 m	A	19.99.1018	50
VALUE Power Cable, straight IEC Conncector, white, 0.6 m	B	19.99.1016	50
VALUE Power Cable, straight IEC Conncector, white, 1.8 m	B	19.99.1019	50
VALUE Power Cable, angled IEC Connector, black, 1.8 m	C	19.99.1118	50
VALUE Power Cable, straight Compaq Connector, black, 1.8 m	D	19.99.1028	20

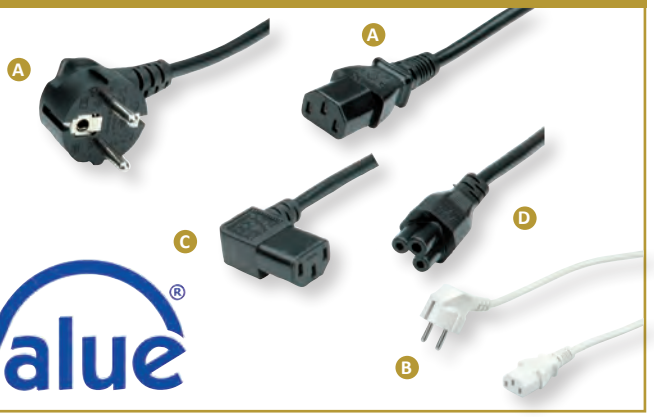

ROLINE Power Cables, straight IEC Connector

Cable with safety plug 90° angulate (Schuko plug) and IEC 320-C13

- Plugs: Schuko plug to C13 plug
- Nominal data: 250V AC/10A
- Colour: black

		Order-No.	P.U.
ROLINE Power Cable, straight IEC Connector, black, 1.8 m	A	19.08.1018	50
ROLINE Power Cable, straight IEC Connector, 3 m	A	19.08.1030	50
ROLINE Power Cable, angled IEC Connector, 1.8 m	B	19.08.1118	50
ROLINE Power Cable, straight Compaq Connector, 1.8 m	C	19.08.1028	20

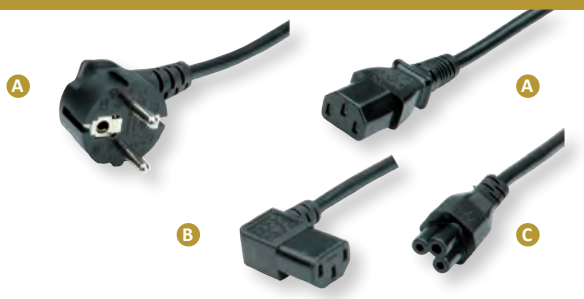

ROLINE Power Cables, straight IEC Connector

A great solution for neat cable management in any data center! We recommend our colored monitor power cables, e.g. 19.08.1520 (C14-C13), as additional products.

Cable with safety plug 90° angulate (german type) and IEC 320-C13

- Plugs: safety plug to C13 plug
- Nominal data: 250V AC/2.5A

roline® Designed for Professionals

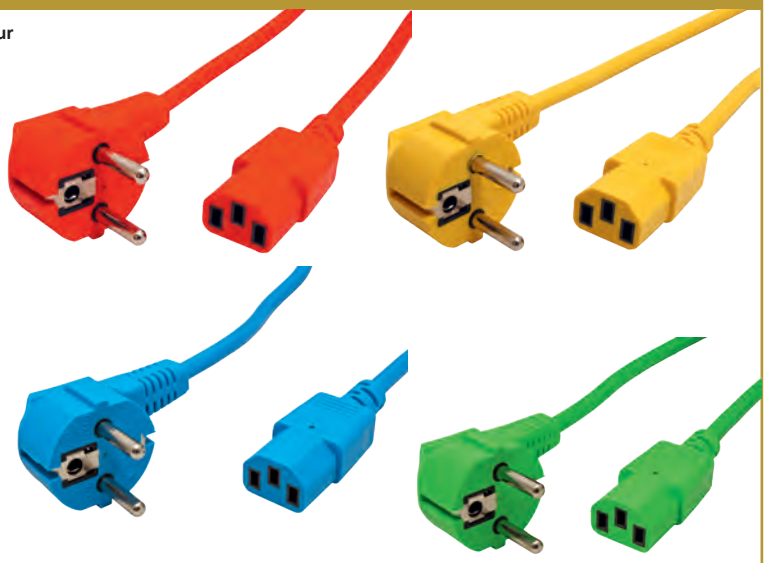

	Order-No.	– P.U.
ROLINE Power Cable, straight IEC Connector, red, 1.8 m	19.08.1010	– 25
ROLINE Power Cable, straight IEC Connector, yellow, 1.8 m	19.08.1011	– 25
ROLINE Power Cable, straight IEC Connector, blue, 1.8 m	19.08.1012	– 25
ROLINE Power Cable, straight IEC Connector, green, 1.8 m	19.08.1013	– 25

VALUE / ROLINE Euro Power Cables, 2-pin

- Suitable e.g. for notebook power supply
- Connectors: Europlug to IEC320-C7 plug
- Moulded plugs
- 250V AC/2.5A

roline® Designed for Professionals

Value®

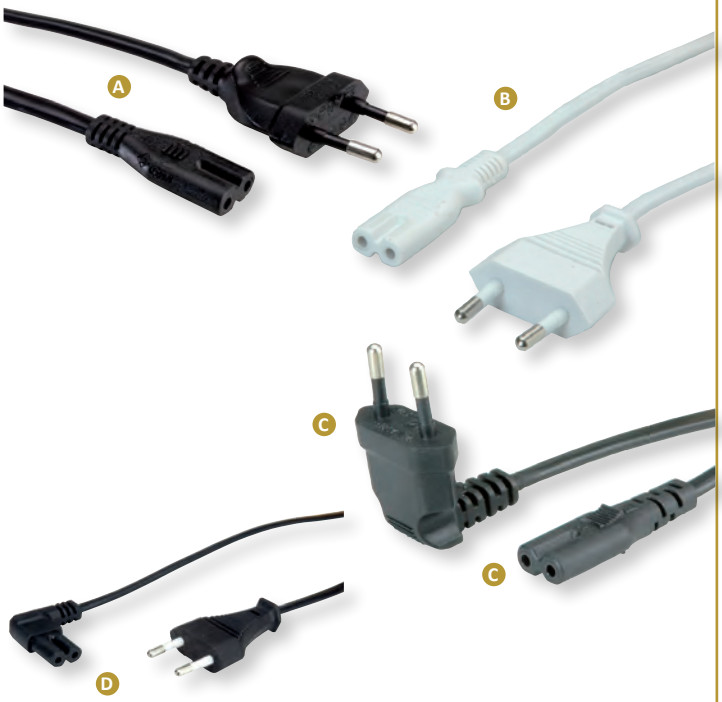

		Order-No.	– P.U.
VALUE Euro Power Cable, 2-pin, black, 1 m	A	19.99.2089	– 100
VALUE Euro Power Cable, 2-pin, black, 1.8 m	A	19.99.2096	– 100
VALUE Euro Power Cable, 2-pin, black, 3 m	A	19.99.2092	– 50
VALUE Euro Power Cable, 2-pin, black, 5 m	A	19.99.2094	– 50
VALUE Euro Power Cable, 2-pin, white, 1 m	B	19.99.2090	– 100
VALUE Euro Power Cable, 2-pin, white, 1.8 m	B	19.99.2095	– 100
VALUE Euro Power Cable, 2-pin, white, 3 m	B	19.99.2091	– 50
ROLINE Euro Power Cable, 2-pin, black, 1.8 m	A	19.07.2096	– 100
ROLINE Euro Power Cable, 2-pin, black, 3 m	A	19.07.2073	– 50
ROLINE Euro Power Cable, 2-pin, black, 5 m	A	19.07.2078	– 50
VALUE Euro Power Cable, 2-pin, C/ connector 90° angled, black, 1.8 m	D	19.99.2088	– 100
ROLINE Euro Power Cable, 2-pin, angled, black, 1.8 m	C	19.07.2093	– 100

VALUE Notebook Power Cable, Swiss, 3-pin

- Molded, SEV-tested power cord for connecting notebooks
- Rated data: 2.5 A / 250V AC
- Color: black / white



roline® Designed for Professionals

Value®

	Order-No.	– P.U.
VALUE Notebook Power Cable, 3-pin, CH, black, 1 m	19.99.2097	– 50
ROLINE Notebook Power Cable, 3-pin, CH, black, 1.8 m	19.07.2097	– 50
VALUE Power Cable, Straight IEC, CH, black, 0.8 m	19.99.1221	– 50
VALUE Power Cable, Straight IEC, CH, black, 1.8 m	19.99.1220	– 50
VALUE Power Cable, Straight IEC, CH, black, 3 m	19.99.1222	– 50
VALUE Power Cable, Straight IEC, CH, white, 1.8 m	19.99.1223	– 50

VALUE Power Cables, Italy

Cable with Italy safety plug 90° angled and IEC 320-C13

- Plugs: Italy plug to C13 plug
- Nominal data: 250V AC/2.5A
- Colour: black

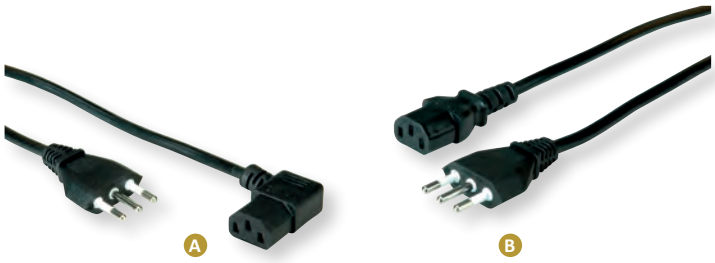

		Order-No.	P.U.
VALUE Power Cable, angled IEC Connector, Italy, black, 1.8 m	A	19.99.2070	50
VALUE Power Cable, straight IEC Conncector, Italy Version, black, 1.8 m	B	19.99.2072	50

VALUE UK Power Cables, 3A/10A

- Plugs: UK plug to C5 / C7 / C13 plug
- Nominal data: 250V AC / 3A or 10A
- Colour: black

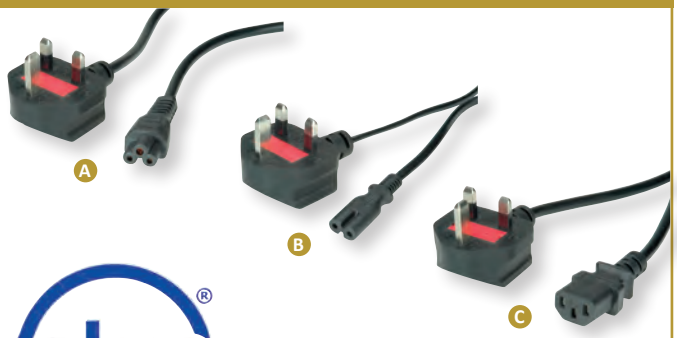

		Order-No.	P.U.
VALUE UK Power Cable, straight Compaq Connector, 3A, black, 1.8 m	A	19.99.2016	50
VALUE UK Power Cable, 2-pin, black, 3A, 1.8 m	B	19.99.2017	50
VALUE UK Power Cable, straight IEC Conncector, 10A, black, 1.8 m	C	19.99.2018	50
VALUE UK Power Cable, straight IEC Conncector, 10A, black, 3 m	C	19.99.2019	20

ROLINE Power Cable with German Type Connector / Open End, AC 230V

- Cable with Schuko male connector, 16A / 230VAC
- Cable: H05VV-F 3G1 3x 0.75mm²
- Nominal data: 250 VAC/16 A
- Colour: black

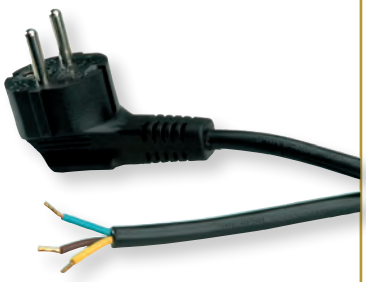

	Order-No.	P.U.
ROLINE Power Cable w. German connector / open end, AC 230V, black, 1.8 m	19.08.1110	10
ROLINE Power Cable w. German connector / open end, AC 230V, black, 3.0 m	19.08.1111	10

VALUE / ROLINE Y-Power Cable, 2x straight IEC Connector

Cable with safety plug 90° angled (3P German Plug) and 2x IEC 320-C13 plug straight

- Suitable for PC and monitor power connection
- Connectors: 3P German plug to 2x C13 plug
- Nominal data: 250V AC/10A



	Order-No.	P.U.
VALUE Y-Power Cable, 2x straight IEC Connector, black, 2 m	19.99.1022	50
ROLINE Y-Power Cable, 2x straight IEC Connector, black, 2 m	19.08.1022	50
ROLINE Y-Power Cable, 2x straight IEC Connector, white, 2 m	19.08.1023	50

VALUE / ROLINE Power Cord German Safety Plug, IEC320 - C19 16A

Cable often used for UPS from 3000 VA and for connecting Blade servers.

- Connection cable 16 A with IEC320 C19 Female and German safety plug, angled
- Cable: H05VV-F 3G1.5 3x 1.5mm²
- Nominal data: 250 VAC/16 A
- Colour: black

	Order-No. – P.U.
VALUE Power Cord German Type, IEC320 - C19 16A, black, 2.0 m	19.99.1552 – 20
VALUE Power Cord German Type, IEC320 - C19 16A, black, 3.0 m	19.99.1553 – 20
ROLINE Power Cord German Type, IEC320 - C19 16A, black, 2.0 m	19.08.1552 – 14
ROLINE Power Cord German Type, IEC320 - C19 16A, black, 3.0 m	19.08.1553 – 10
ROLINE Power Cord IEC320/C19 - C20 16A, black, 2.0 m	19.08.1562 – 14
ROLINE Power Cord IEC320/C19 - C20 16A, black, 3.0 m	19.08.1563 – 10



VALUE Extension Cable with 3P. German connectors, AC 230V

- Extension cable with 3P. German male and female connector, 16A / 230V ~
- Cable: H05VV-F 3G1.5 3x 1.5mm²
- Nominal data: 250 VAC/16 A
- Colour: black / white

	Order-No. – P.U.
VALUE Extension Cable with 3P. German connectors, AC 230V, black, 3 m	19.99.1166 – 20
VALUE Extension Cable with 3P. German connectors, AC 230V, black, 5 m	19.99.1167 – 20
VALUE Extension Cable with 3P. German connectors, AC 230V, black, 10 m	19.99.1168 – 10
VALUE Extension Cable with 3P. German connectors, AC 230V, white, 3 m	19.99.1176 – 20
VALUE Extension Cable with 3P. German connectors, AC 230V, white, 5 m	19.99.1177 – 20
VALUE Extension Cable with 3P. German connectors, AC 230V, white, 10 m	19.99.1178 – 10



VALUE Extension Cable with 3P. Connectors, UTE Version, AC 230V

Extension cable with German Type plug and socket, 16A/230V
- Extension cable with 3P. male and female connector, UTE Version, 16A / 230V ~
- Cable: H05VV-F 3G1.5 3x 1.5mm²
- Nominal data: 250 VAC/16 A
- Colour: black
- **Suitable for France, Czech Republic, Slovakia**

	Order-No. – P.U.
VALUE Extension Cable with 3P. Connectors, UTE Version, AC 230V, black, 3 m	19.99.1170 – 20
VALUE Extension Cable with 3P. Connectors, UTE Version, AC 230V, black, 5 m	19.99.1171 – 20
VALUE Extension Cable with 3P. Connectors, UTE Version, AC 230V, black, 10 m	19.99.1172 – 10
VALUE Extension Cable with 3P. Connectors, UTE Version, AC 230V, white, 3 m	19.99.1173 – 20
VALUE Extension Cable with 3P. Connectors, UTE Version, AC 230V, white, 5 m	19.99.1174 – 20
VALUE Extension Cable with 3P. Connectors, UTE Version, AC 230V, white, 10 m	19.99.1175 – 10



VALUE Extension Cable T12/T13 (CH)

- Extension cable
- T12 plug / T13 socket
- Type Td 3x1.5 mm²
- Colour: black / white

	Order-No. – P.U.
VALUE Extension Cable T12/T13 (CH), 3 m	19.99.1180 – 20
VALUE Extension Cable T12/T13 (CH), 5 m	19.99.1181 – 20
VALUE Extension Cable T12/T13 (CH), 10 m	19.99.1182 – 10
VALUE Extension Cable T12/T13 (CH), white, 3 m	19.99.1183 – 20
VALUE Extension Cable T12/T13 (CH), white, 5 m	19.99.1184 – 20
VALUE Extension Cable T12/T13 (CH), white, 10 m	19.99.1185 – 10



VALUE Power Cable, German Socket to IEC C14 Plug

Cable with safety socket (German socket) and IEC 320-C14

- Plugs: German socket to C14 plug
- Nominal data: 250V AC/10A
- Colour: black

- Note: only for UPS use



	Order-No. – P.U.
VALUE Power Cable, German Socket to IEC C14 Plug, black, 0.3 m	19.99.1117 – 20

VALUE Power Cable IEC320/C14 Male - C5 Female

Ideal for use as extension/conversion from an IEC power lead to power a laptop with a IEC C5 socket input.

- Voltage 250 V AC
- Current: 2.5 A
- Connector type:

- Male Plug IEC60320 C14
- Female Connector IEC60320 C5

- Cable construction: 3 wires
- Conductors / Wires: Gauge 1.0mm²
- Material: PVC
- Color: Black



	Order-No. – P.U.
VALUE Power Cable IEC320/C14 Male - C5 Female, black, 1.8 m	19.99.1119 – 20

VALUE Power Cable IEC320/C14 Male - C15 Female

This type of connector (C15) is specifically designed for higher temperature devices, e.g. computing networking cabinets or server rooms, and PoE (Power over Ethernet) switches with higher wattage power supplies.

- Voltage 250 V AC
- Current: 10 A
- Connector type:

- Male Plug IEC60320 C14
- Female Connector IEC60320 C15 (hot temperature connector)

- Cable construction: 3 wires
- Conductors / Wires: Gauge 1.0mm²
- Material: PVC
- Color: Black

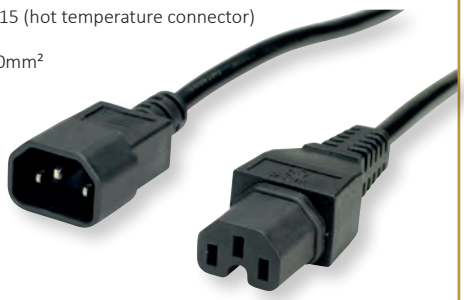

	Order-No. – P.U.
VALUE Power Cable IEC320/C14 Male - C15 Female, black, 0.5 m	19.99.1120 – 20
VALUE Powercable IEC320/C14 Male - C15 Female, black, 1 m	19.99.1121 – 20
VALUE Powercable IEC320/C14 Male - C15 Female, black, 1.8 m	19.99.1122 – 20
VALUE Powercable IEC320/C14 Male - C15 Female, black, 3 m	19.99.1123 – 20

VALUE Power Cable, NEMA-5 – IEC C13 Conncector, USA

Cable with plug NEMA-5 and IEC-C13

- Plugs: NEMA-5 male to C13 female
- Nominal data: 125V AC/10A
- Colour: black
- **Suitable for USA**

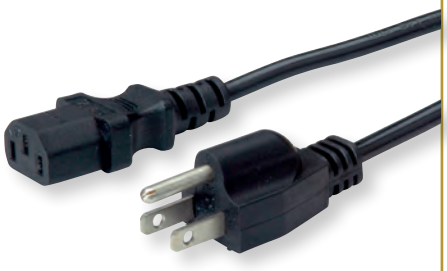

	Order-No. – P.U.
Power Cable, NEMA-5 – IEC C13 Conncector, USA, black, 1.8 m	19.99.1495 – 50



Test / Measurement / Tools

8

Cable Testers / Network Tools . . . . . 8.02 – 8.03
Non-Contact Voltage Tester 8.02
HOBBES Products. . . . . 8.02 – 8.04
Crimping Pliers / Tools. . . . . 8.05 – 8.06
Fiber Optic Cleaning Tools. 8.07
Inspection Camera. 8.09
Service Kits . . . . . 8.08 – 8.11
Cable Ties / Installation Tools / Clips 8.12
Cable Tunnel Organizers 8.12

VALUE LAN Quicker Cable Tester

For the quick test of RJ-45/UTP, RJ-45/STP cabling
- OPEN, SHORT and CROSS test function
- LED indicator on both main unit and remote unit
- Beep sound warning
- Step/Auto select function
- Low battery indication
- Auto power off
- Small size, easy to carry
- Carrying case included
- Ideal for LAN installation
- Dimensions: 104 x 78 x 33 mm
- Contents: Cable tester, 9V battery, carrying case





	Order-No. – P.U.
VALUE LAN Quicker Cable Tester	13.99.3001 – 5

VALUE LAN Cable Multifunction Tester

- The tester can check UTP and STP Cat.5e, Cat.6, Cat.6a and coaxial cables
- It can identify and locate the distance to an open or short circuit
- Uses TDR (Time Domain Reflectometer) to measure the length and distance to the defective of a cable
- Identification of wiring and pin assignment
- LCD backlight display
- Low battery indication





	Order-No. – P.U.
VALUE LAN Cable Multifunction Tester	13.99.3002 – 1

VALUE LANtest Multi-Network Cable + PoE Tester

- Continuity testing of coax cables with BNC connectors and 8-pole data lines w. fitted RJ-45 connectors
- The device recognises open and short-circuited (wire/wire or wire/shield) connections
- A two-line display (LEDs) indicates sequentially which pin of the RJ-45 connector at cable end A is connected with which pin at cable end B and manual or automatic switch advancing is possible; in the case of a short-circuit more than two LEDs light up simultaneously
- The device has 2 RJ-45 sockets; with the supplied Remote Kit cables laid in the wall can also be tested
- Two adapter cables (BNC/RJ-45) are supplied for testing coax cables
- PoE check- the PoE Finder allows the newtork administrator to find out if a network cable is supplied via PoE. Just plug in the network cable that has to be tested. The LED of the PoE finder will shine if the cable is supplied with power.
- Battery (not included in delivery): 1x E-block 9V (6LR61/AM-6)



	Order-No. – P.U.
VALUE LANtest Multi-Network Cable + PoE Tester	13.99.3003 – 5

VALUE Non-Contact Voltage Tester, 1000V, with Flashlight

Non-contact, automatic voltage test for voltages from 12-1000V AC for a wide range of applications

- Provides non-contact detection of AC voltage
- Detects 12 to 1000V AC with simultaneous visual and audible voltage indicators
- Bright flashlight illuminates work area and may be used independent of voltage detection function
- Visual LED indicates the presence of voltage- the higher the voltage sensed, or the closer to the voltage source, the more LEDs light up
- Bar graph visual voltage indicator utilizes up to five vibrant LEDs for easy interpretation/viewing
- Audible voltage indicator beeps at a greater frequency the higher the voltage that is sensed, or the closer to the voltage source
- ''Auto Power-Off'' conserves and extends battery life
- Screw-thread battery cap with O-ring ensures protection against dust and water ingress
- Lightweight, compact tool with pocket clip provides convenient storage and quick access



	Order-No. – P.U.
VALUE Non-Contact Voltage Tester, 1000V, with Flashlight	19.99.5079 – 10

HOBBES LANtest Multinetwork Cable Tester

- Continuity testing of coax cables with BNC connectors and 8-pole data lines w. fitted RJ-45 connectors
- The device recognises open and short-circuited (wire/wire or wire/shield) connections
- A two-line display (LEDs) indicates sequentially which pin of the RJ-45 connector at cable end A is connected with which pin at cable end B and manual or automatic switch advancing is possible; in the case of a short-circuit more than two LEDs light up simultaneously
- The device has 2 RJ-45 sockets; with the supplied Remote Kit cables laid in the wall can also be tested
- Two adapter cables (BNC/RJ-45) are supplied for testing coax cables
- Battery (not included in delivery): 1x E-block 9V (6LR61/AM-6)



	Order-No. – P.U.
HOBBES LANtest Multinetwork Cable Tester	13.01.3383 – 4

HOBBES Network Cable Tester Products

Network Cable Testers

It enables the technician to troubleshoot the network by identifying specific faults with a range of features, such as cable crimping, wiring continuity testing, cable tracing, PoE type identifying, cable organizing, cable length testing, switch port blinking and much more.


A


B


C


D


E


F


G


H

Hobbes® INNOVATION


J


K


L


M


N


O

		Order-No.	– P.U.
HOBBES GIGA-X Network Cable Tester (256800)	A	13.01.3345	– 2
HOBBES LAN Idgiga Link Tester, Port Finder & PoE Tester (256655G)	B	13.01.1557	– 4
HOBBES LANsmart Pro & SmartProbe Kit (256003PK)	C	13.01.1558	– 1
HOBBES LANsmart Pro, Network Cable Tester (256003PRO)	D	13.01.3267	– 5
HOBBES LANsmart, Network-/ Cable Tester (256003)	E	13.01.3348	– 2
HOBBES LANtest Basic Network Cable Tester, 20. (256551/20TH)		13.01.3269	– 4
HOBBES LANtest Kit, Multi-Network Modular Cable Tester (256551)	F	13.01.3383	– 4
HOBBES LANtest Pro Network Cable Tester, incl. 4 Remotes (256652A/IDT)	G	13.01.3270	– 2
HOBBES LANtest Pro Network Cable Tester (256652A)	H	13.01.3379	– 4
HOBBES NETmapper (256850)	J	13.01.3262	– 5
HOBBES NETmapper Pro (256850PRO)	K	13.01.3275	– 5
HOBBES NETmapper Pro & SmartProbe Kit (256850PK)	L	13.01.3274	– 1
HOBBES Network Installation Kit (HT-4015)	M	13.01.3287	– 2
HOBBES Probe (256712A)		13.01.1556	– 4
HOBBES SMARTone & SMARTprobe Kit (256713D)		13.01.3273	– 4
HOBBES SMARTone, Digital Cable Locator Tone Generator (256711D)		13.01.3272	– 4
HOBBES SURVLtest, CCTV Tester for IP/HD Coax/Analogue (HST321)		13.01.3291	– 1
HOBBES Tone Generator (256711A)		13.01.3271	– 4
HOBBES Tone Generator & Probe Kit (256713A)		13.01.1555	– 2
HOBBES Tooltest, Crimping Tool + Cable Tester (HTC-0022)	N	13.01.3358	– 5
HOBBES LANtest Multinetwork PoE Cable Tester(256551P)	O	13.01.3371	– 4

HOBBES Fiber Optic Products (OptiSource / Tool Kit / Cable Tester / Cleaning)

Fiber Optic Testers

- It supports technicians during fiber testing and fiber optic signal identifying. It is suitable for verification testing and troubleshooting during fiber installation and maintenance.


A


B


C


D


E


G


F


H



J


K

		Order-No.	– P.U.
HOBBES OPTISource 850-1300 nm (257821)	A	13.01.3263	– 2
HOBBES OPTISource 850-1300-1310-1550 nm (257823)	B	13.01.3264	– 2
HOBBES Fiber Optic Tool Kit incl. Fiber Checker Pro (HT-F3033FC5)	C	13.01.3288	– 2
HOBBES Fiber Checker Pro II + LC Adapter (FC-2009A)	D	13.01.3282	– 2
HOBBES Fiber Checker Pro + LC Adapter (FC-2005A)	E	13.03.3389	– 5
HOBBES 2.50 mm to 1.25 mm LC Adapter (FA-003)	F	13.01.3372	– 10
HOBBES Fiber Checker Pro Cable Tester (FC-2005)	G	13.01.3377	– 5
HOBBES Basic Fiber Optic Tool Kit (HT-F3033) (HT-K3032)	H	13.01.3290	– 2
HOBBES CLEANSSETTE Optical connector cleaner, Cassette (FCT-C410)	J	13.01.3283	– 10
HOBBES Optical connector cleaner, dispos. cleaning reel (FCT-CR001)	K	13.01.3284	– 10
HOBBES SMARTFiber Pro (257835PRO)		13.01.3276	– 1

HOBBES INNOTEST Module Cable Tester / TEST-i All-in-One cable/Interface Test

The INNOTEST - All-in-One Universal Cable Tester/BBU Baseband Unit Interface Tester

- Module design cable tester
- The module of INNOTEST- All-in-One Universal Cable Tester/BBU Baseband Unit Interface Tester can be removed and replace with the connector type that you need.
- Test not only each pins connection to identify open wires, shorted wires, cross wires, and mis–wires, it also shows pin–to–pin connectivity of your cable.
- All-in One cable tester supports more than 20 types of connectors.

TEST-i Pro - All-in-One Universal Cable Tester/BBU Baseband Unit Interface Tester

- Includes wire mapping function to test each pins connection to identify opened, shorted, crossed, and mis–wires. It also shows pin–to–pin connectivity, and can save up to 100 test results. The crucial data can be saved and uploaded to a PC via USB interface for analysis. Furthermore, it also includes built–in extension port for user needs additional types of cable testing that is not included in standard TEST-i Pro- All-in-One Universal Cable Tester/BBU Baseband Unit Interface Tester.


B


A



C

		Order-No.	– P.U.
HOBBES INNOTEST Module Cable Tester, Module Kit, Case (258012IM-002)	A	13.01.3277	– 2
HOBBES INNOTEST Module Cable Tester, HDMI Module Kit, Case (258012IM-004)	B	13.01.3278	– 2
HOBBES TEST-i All-in-One cable/interface test (258898)	C	13.01.3266	– 1

Network Tool Set

- **1x Punch Down Tool** - for inserting wire into insulation-displacement connectors on e.g. punch down blocks, patch panels, keystone modules, surface mount boxes

- **1x LAN Tester**
- Line tester for continuity test of Cat.5/6/6A and ISDN network lines
- Separate receiver for long length cable, the main unit and separate receiver can be attached to each other via a lateral guide rail
- Connection test with LED display for 8 single wires and shielding / detection of continuity, misalignment, interruption, short circuit, crossover cable
- Power supply via 9VDC block battery (not supplied)
- Compatible with the following connectivity modular plugs: RJ45 (8P8C), RJ12 (6P6C), RJ11 (6P4C, 6P2C)
- Supported network standards: 10Base-T, 10Base-T2, 285A, TIA568A / 568B

- **1x Cable Stripper** - with 4 different blades for cutting the PVC jacket of cables of various sizes
- **1x RJ45 Crimping Tool**



	Order-No. – P.U.
Network Tool Set, 4 pcs.	19.06.2034 – 10

VALUE Crimping Tool 8P8C

- Solid metal pliers for cutting, stripping and crimping
- For RJ-45 connectors with 8 pins and 8 contacts



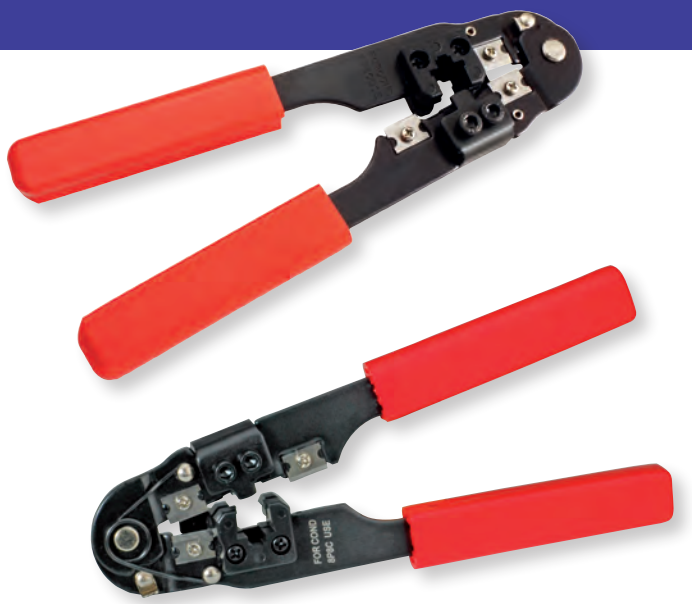

	Order-No. – P.U.
VALUE Crimping Tool 8P8C	25.99.8791 – 5

Crimping Tool 8-Pin 8-Contact

- Solid metal pliers for cutting, stripping and crimping
- For RJ45 connectors with 8 pins and 8 contacts



	Order-No. – P.U.
Crimping Tool 8-Pin 8-Contact	19.06.1020 – 10

VALUE Multifunction Crimping Tool 8P+6P+4P

- For 4/6/8-pole modular plugs
- Suitable for cutting, insulation removal (ribbon cable) and crimping
- Fitted with a forced lock with unlocking capability in the case of incorrect use
- Universally usable
- Robust metal tongs



	Order-No. – P.U.
VALUE Multifunction Crimping Tool 8P+6P+4P	25.99.8790 – 5

VALUE Universal Crimping Tool 8P6P, 6P4C

- For 6/8-pole crimping modular plugs (RJ-11, RJ-12, RJ-45)
- Suitable for cutting, insulation removal (ribbon cable) and crimping
- Fitted with a forced lock with unlocking capability
- Universally usable
- Robust metal tongs

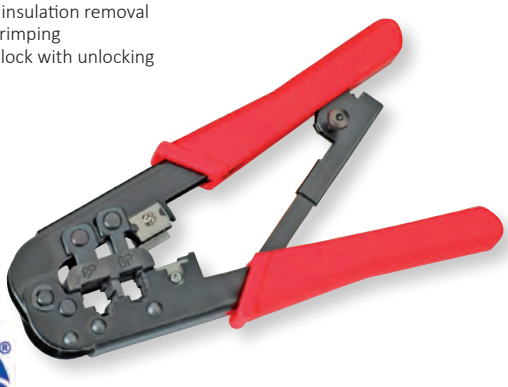

	Order-No. – P.U.
VALUE Universal Crimping Tool 8P6P, 6P4C	25.99.8792 – 5

Universal Modular Crimping Tool

- For crimping modular plug: 8p8c/RJ-45, 6p6c/RJ-12 and 6p4c/RJ-11
- Suitable for cutting, insulation removal (ribbon cable) and crimping
- Fitted with a forced lock with unlocking capability
- Universally usable
- Robust metal tongs

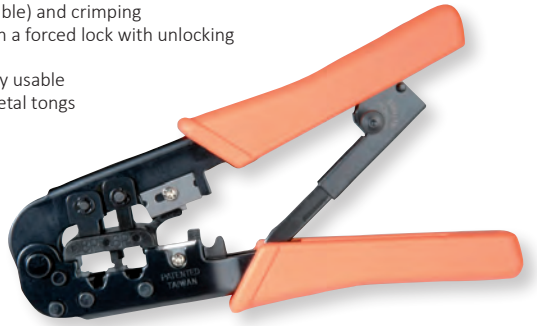

	Order-No. – P.U.
Universal Modular Crimping Tool	19.06.1021 – 5

Universal Crimping Tool for Modular Plugs

- For 4/6/8-pole modular plugs from AMP System WE or DEC (RJ-12 and MMJ)
- Suitable for cutting, insulation removal (ribbon cable) and crimping
- Fitted with a forced lock with unlocking capability in the case of incorrect use
- Universally usable
- Robust metal tongs



	Order-No. – P.U.
Universal Crimping Tool for Modular Plugs	19.06.1048 – 10

Crimping Tool for Hirose RJ-45 Plug, TM11/TM21

- Special crimping tool only suitable for HiRose modular plugs TM11
- Presses the connectors and the housing screening together in one movement
- In possible case of wrong handling, compulsory block through unlocking function
- Stable construction
- Metal

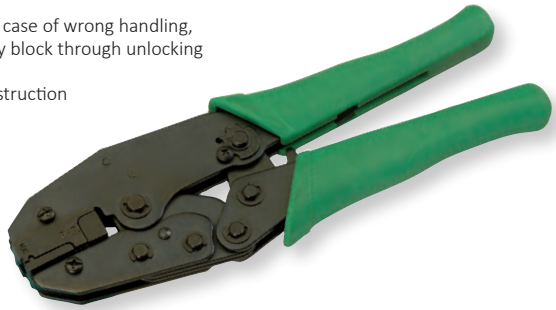

	Order-No. – P.U.
Crimping Tool for Hirose RJ-45 Plug, TM11, green	19.06.1029 – 10
Crimping Tool for Hirose RJ-45 Plug, TM21, blue	19.06.1031 – 10

VALUE Universal Wire Stripper

Light weight, compact, cost-effective stripper, simple to operate.

- Adjustable stripping blade for different insulation thickness, prevents damage of shielding and conductors
- For stripping coaxial cables RG59, RG6, RG7/11
- For stripping round networking cables
- For stripping flat 4P/6P/8P telephone cables
- The cassette can be reversed to change different coaxial cables
- For cutting cables
- Weight: ca. 70 g



	Order-No. – P.U.
VALUE Universal Wire Stripper	25.99.8793 – 6

VALUE IDC Tool

- Excellent value for money
- Punch down tool for terminating into Cat. 5 patch panels with IDC blocks



	Order-No. – P.U.
VALUE IDC Tool	25.99.8799 – 20

VALUE Fibre Optic Universal-Cleaning Products

13.99.3005 - VALUE Fibre Optic Universal Claening Cassette
- Application range: can be used for any optical fiber cables plug type independently
- The cassette cleaner wipes away contaminants from optical connector end face
- Designed for all types of connectors
- Compact size for easy hand-held operations
- Dry-clean without the use of harmful substances
- Cleaning micro fibers are densely stranded and debris free
- Constructed with anti-static material
- Up to 500 cleanings per unit possible
- Contents: 100 Cleaning-Tissues

13.99.3006 - VALUE Fibre Optic Cleaning Pen for SC Plug, 2.5mm
- Ergonomic and comfortable design for cleaning SC connections
- Consistent cleaning results due to its precise mechanical action
- Economical solution with up to 800 endface cleanings in one unit possible
- Cleans both APC and UPC connectors
- Effective on a variety of contaminants, including: Dust / Lint / Oil / Grease

13.99.3007 - VALUE Fibre Optic Cleaning Pen for LC Plug, 1.25mm
- Ergonomic and comfortable design for cleaning SC connections
- Consistent cleaning results due to its precise mechanical action
- Economical solution with up to 800 endface cleanings in one unit possible
- Cleans both APC and UPC connectors
- Effective on a variety of contaminants, including: Dust / Lint / Oil / Grease



A








B


D

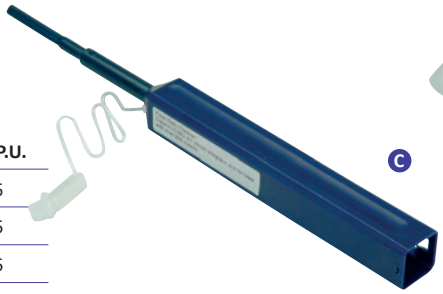
C

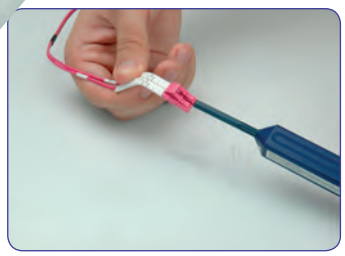

		Order-No. – P.U.
VALUE Fibre Optic Cleaning Cassette	A	13.99.3005 – 5
VALUE Fibre Optic Cleaning Pen for SC Plug, 2.5mm	B	13.99.3006 – 5
VALUE Fibre Optic Cleaning Pen for LC Plug, 1.25mm	C	13.99.3007 – 5
VALUE Fibre Optic Cleaning for MPO Plug	D	13.99.3013 – 5

Portable Laser Fiber Optic Checker Pro

For the quick test of Fibre Optic cables.
- Sends a visible (650 nm) strong laser signal through the cable- braking points become transparent by a visible light in the area of the damage
- Universal-connector can be used with common connector types (ST, SC, FC and others)
- Reversibel between continuous and pulsing ray
- Both Multi-mode and Single-mode distances suitable
- Batteries (not included in delivery): 2x Mignon (AA) 1.5V (LR06)



	Order-No. – P.U.
Portable Laser Fiber Checker Pro	13.99.3011 – 25

ROLINE Precision Ratchet Screwdriver Set, 9-in-1

Mobile screwdriver set for the vest pocket - equipped with the most important slotted and Philips bits for general applications on the go.
- Slotted and Phllips chrome vanadium bits for general purpose applications
- Precision Ratchet
- Convenient bit storage in handle
- Handy pocket clip design
- Secure grip
- Ideal for glasses, jewelery, watches, hobby works and the most mobile applications
- Dimensions: 60 x 35 x 18mm (folded), 110 x 35 x 18mm (open)
- Contents: Handle, 9 pcs. bits: slotted 1.5mm, 2.0mm, 3.0mm, Phillips #00, #0, #1, T-bits T7, T8, T9











roline®
Designed for Professionals

	Order-No. – P.U.
ROLINE Precision Ratchet Screwdriver Set, 9 in 1	19.06.1008 – 10

Electronic Mini Screwdriver Set, 12-in-1

- This kit is perfect for technicians, do-it-yourself or anyone who needs to carry a useful precision tool while travelling
- High quality CRV steel material, with deluxe leather bag
- Ideal for repairing glasses, mobiles, electronic & computer or any precision equipment
- Contents:
  1 handle with fast chuck
  3 Philips screw bits PH000, PH00, PH0
  3 slotted screw bits 1.5, 2, 2.5 mm
  6 T-screw bits T5, T6, T7, T8, T9, T10





	Order-No. – P.U.
Electronic Mini Screwdriver Set, 12-in-1	19.06.2032 – 20

VALUE Laptop and Smartphone Repair Tool Kit, 24 Piecess

24-piece tool set for precision work, e.g. for repairing smartphones, tablets, notebooks, cameras or game consoles.

- Complete, comprehensive kit
- It includes the essential tools for the repair and refurbish market
- It allows the opening of Smartphones, Smartwatches, Tablets, Notebooks and other electronic devices such as video game consoles or cameras.

Kit includes:
Opening and prying tools
- 1x Precision Screwdriver
- 1x Suction Cup
- 2x Mini Pry Bar
- 1x Needle
- 1x Storage Box
- 1x Triangle Puller
- 1x 120mm Stainless Tweezer

- 16 Precision Bits
  - Philips: PH000,PH00, PH0, PH1
  - Slot:2.0
  - Torx: T4, T5, T6, T8, T10
  - Pentalobe: P2, P5, P6 (iPhone, Mac-Book Air, MacBook Pro))
  - HEX: H2.0
  - Triwing: TRI 0, TRI 1
- Contents: Repair Tool Kit, 24 pieces





	Order-No. – P.U.
VALUE Laptop and Smartphone Repair Tool Kit, 24 Pieces	19.99.2047 – 10

VALUE Hexagon Socket Set, Ball Head, 9-in-1

Mobile hexagon socket set for the vest pocket - equipped with the most important hexagon socket wrenches for most applications on the go.

- Hexagon socket wrench in many sizes for general applications
- Ball heads for applications that are particularly difficult to access
- Convenient storage of keys in practical clip case
- Especially hard chrome vanadium steel for reliable use
- Size declaration in clip case
- Contents: clip case, nine Allen keys (1.5mm, 2mm, 2.5mm, 3mm, 4mm, 5mm, 6mm, 8mm, 10mm)

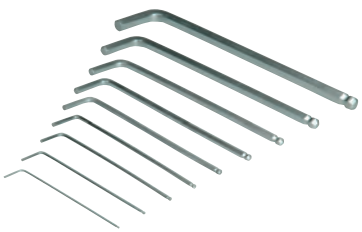



	Order-No. – P.U.
VALUE Hexagon Socket Set, Ball Head, 9-in-1	19.99.1008 – 10

Precision Pliers + Screwdriver Set, 19-piece

- This kit is perfect for technicians, do-it-yourself or anyone who needs to carry a useful precision tool while travelling
- High quality CRV steel material, with deluxe bag in grey and black colour
- Ideal for repairing glasses, mobiles, electronic & computer or any precision equipment

• Contents:
- 1 long long-nose plier
- 1 long-nose plier
- 1 angled long-nose plier
- 1 flat-nose plier
- 1 crusher
- 1 wire cutting plier
- 1 tweezer
- 3 Philips screwdrivers PH00 x50 mm, PH0 x50 mm, PH1 x50 mm
- 3 slotted screwdrivers 2 x50 mm, 2,5 x50 mm, 3 x50 mm
- 6 torx screwdrivers T6 x50 mm, T7 x50 mm, T8 x50 mm, T9 x50 mm, T10 x50 mm, T15 x50 mm







	Order-No.	P.U.
Precision Pliers + Screwdriver Set, 19-piece	19.06.2033	20

VALUE Portable Digital Flexible Inspection Camera with LCD Monitor

Ideal for detailed visual inspection in tight places, in automotive maintenance, electrical repair, plumbing applications, and the visual inspection of otherwise inaccessible or hard-to-reach areas.

- Easy to use, lightweight, handhold design
- A unique way of winding facilitates users operation
- Flexible cable can be bent into many shapes to fit into unreachable areas
- Waterproof camera head and cable withstand wet environments
- Approx. 11cm (4.3“) LCD screen makes the visual inspection clearer and easier
- High-quality CMOS sensor resolution is 640x480 pixels
- Optical lens view angle is 45±5°
- Probe diameter is 8mm
- Waterproof IP67 (camaera head + tube)
- Camera head can be equiped with three accessories including magnetic tip, mirror tip and hook
- Powered by 4x AA batteries (not included in the package)

Technical Data
- Diameter Of Camera Head: Ø8mm
- Image Sensor: 1/9“,CMOS
- Effective Pixel: 640 x 480pixels
- Horizontal Viewing Angle: 50±5°
- Waterproof Level: IP67
- Display Size: 4.3“ TFT LCD monitor
- Image Zoom: 2x variable digital zoom
- Interface: TV out
- Power Supply: 4AA Batteries (not included)
- Power consumption: 1.5W(max.)







	Order-No.	P.U.
VALUE Portable Digital Flexible Inspection Camera with LCD Monitor	13.99.3008	5

Electronic Precision Tool-Kit

- All the necessary tools in a mini zipper bag (245 x 140 x 40 mm)
- The right equipment wherever you are

- Contents:
- 2 Precision screwdrivers: 2.0x50, 2.4x 50
- 2 Precision Philips screwdrivers: #100x50, #0x75
- 2 Screwdrivers: slot: 5x100, Philips: 1x100
- 2 Pliers: side cutter (127 mm), long nose (152 mm)
- 1 Tweezer: Fine tip straight (120 mm)
- 1 Sliding magnifier
- 1 Flash light

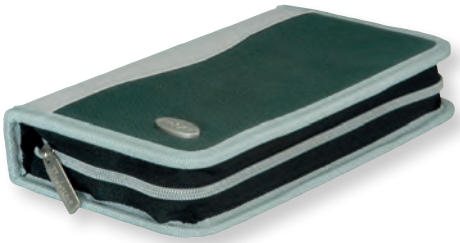



	Order-No. – P.U.
Electronic Precision Tool-Kit	19.06.2029 – 30

Precision Tool Kit, 73 pieces

- Ideal for opening, refurbishing, repairing Smartphone, PAD, notebook, camera and video games.
- Complete, comprehensive kit
- It includes the essential tools for the repair and refurbish market
- It allows opening of tablets, notebooks, electronic device cases such as Apple, HTC, Samsung, Sony etc.

Kit includes:
Opening and prying tools
- Prying Paddle 30.5x30.5x30.5mm
- Opening Lever (POM) 88.7mm
- Opening Lever (POM) 84.4mm
- Suction Cup diameter: 36mm
- Point-Blade Solder Aid Tools (155mm)
- Solder Aid Tools (140mm)
- Fork-Blade Solder Aid Tools (173mm)
- Double-end Metal Spudger (185mm)
- Metal spudger tool (123x12mm)
- Tweezers: super fine tip straight 120.5 mm / fine tip curved 120.5 mm / super fine tip straight 120.5 mm
- Static protection tools: Wrist Strap 3m, to avoid sensitive electronic components, from electrostatic damage
- Lineal
- Precision Knife
- Tool bag (233x150x55 mm)

- 58pcs driver Kit:
42pcs/ 4.0x28 mm,
AISI 8660 Cr-Mo-V steel (- #000, #00, #0, #1, #2 /- 1.0, 1.3, 1.5, 2.0, 2.5, 3.0, 3.5, 4.0 mm /- T3, T4 /- T5H, T6H, T7H, T8H, T9H, T10H, T15H, T20H /- 0.7, 0.9, 1.3, 1.5, 2.0, 2.5, 3.0, 3.5, 4.0 mm /- #0, #1, #2 /- 3.0 mm /- #0, #1 /- 3.0 mm /- Pentalobe: P2, P5, P6 (iPhone, MacBook Air, MacBook Pro))
6 pcs 4.0x30 mm, material: 50BV30 Cr-V steel (- 2.5, 3.0, 3.5, 4.0, 4.5, 5.0 mm)
5 pcs diam. 6.3x25mm, material: AISI 6150 Cr-V steel (- #2, 6.0 mm, 4.5, 5.0, 6.0 mm)
2 pcs diam. 6.3x38mm, material: AISI 6150 Cr-V steel (Torx plus socket, TS3.8, TS4.5)
1 pcs diam. 4.0mm to diam. 1/4“ adaptor 50 mm
1 pcs diam. 4.0x125mm extension bar
1 pcs TPR non-slip handle



	Order-No. – P.U.
Precision Tool Kit, 73 pieces	19.06.2047 – 8

Electronics Master Kit

- Ideal for electronic / electric telecommunications and computer service workers

- **Contents:**
- 127 mm side cutter
- 127 mm long nose plier
- 114 mm bent nose plier
- 152 mm side cutter
- 152 mm long nose plier
- 203 mm combination plier
- 241 mm water pump plier
- 241 mm crimping tool
- 6 pcs. precision screw drivers
- Duplex colour screw drivers: Phillips: 3x75, 5x, 6x100, 6x38 mm / slotted: 3x75, 5x, 6x100, 6x38 mm / Nut: 5 mm, 6 mm
- Testing driver
- Alignment driver
- Utility knife
- 152 mm tweezer
- IC Extractor
- 7 pcs. Folding type hex key wrench
- Brush
- 3 prong holder
- Flash light
- Inspection mirror
- 6 pcs. Open-end wrench set
- 152 mm stainless scissors
- 5 pcs. File set
- 152 mm adjustable wrench
- 3 pcs. soldering aid kit
- Utility component storage box
- Carpenter hammer
- Oil can
- Parts tube
- Heat sink
- 3.3 m measuring ruler
- Solder wick
- Soldering iron stand
- Solder core
- Desoldering pump
- 30 W ceramic 3 way soldering iron
- 2 pcs. removable pallets
- Tool-carrying case (456 x 330 x 105 mm)
- Lockable



	Order-No. – P.U.
Electronics Master Kit	19.06.2045 – 2

Computer Tool Case, 61-piece

Ideal for electronic / electric telecommunications and computer service workers
It includes all the most frequently need to repair or maintenance computer or TV, radio set and other electronic equipments.

• Contents:
- 25 Watt soldering iron
- Soldering iron stand
- 15 gr. solder
- Vacuum desoldering tool
- Fine point/cutting probe
- 3-prong retriever
- IC inserter/extractor
- Crimping tool wire cutter stripper
- Inspection mirror
- 102 mm precision long-nosed pliers
- 89 mm precision diagonal cutting pliers
- Screwdriver handle w/nut driver head
- 6 mm
- Philips bit: #1, #2, #3
- Slotted bit: 4 mm, 5 mm, 6 mm
- Hex bit: 1.5 mm, 2 mm, 2.3 mm, 3.1 mm, 4 mm
- T-Bit: T5, T8, T10, T20
- Nut-driver: 6 mm, 5 mm, 5.5 mm, 7.9 mm, 7.1 mm
- Precision screwdriver Philips: #0
- Slot: 3.1 mm
- Magnetic telescoping P/U tool
- Stainless tweezers
- Stainless clamp on tweezers
- Snap-Blode knife
- Parts tube
- Part box
- 20 ties



	Order-No. – P.U.
Computer Tool Case, 61-piece	19.06.2040 – 7

PC Troubleshooting Tool Set, 145-piece

This tool case is perfect for the computer, electronics and do-it-yourselfer.
It includes all the most frequently need to repair or maintenance computer or TV, radio set and other electronic equipments.

• Contents:
- 3 way ratcher driver with storage
- Hollow star bits: T-8H, T-10H, T-15H, T-20H, T-25H, T-27H, T-30H, T-35H, T-40H
- Hex key set: 2 mm, 2.4 mm, 2.8, 3.2 mm, 3.6 mm, 4 mm
- Metric hex key set: 2 mm, 2.5 mm, 3 mm, 4 mm, 5 mm, 6 mm
- Spanner set: 4, 9, 8, 10
- Tri-wing set: 1, 2, 3, 4
- Torq set: 6, 8, 10
- Solid star bit: T-8, T-10, T-15, T-20, T-27
- #1 pozidriver bit
- #4 and #6 slotted bits
- #1 Philips bit
- Square bit: 50, 51, 52, 53
- Nutdriver socket adapter
- Bit holder
- 5-pc. nutdriver set: 4.7 mm, 6.4 mm, 7.9 mm, 8.7 mm, 9.5 mm
- 5-pc. metric nutdriver set: 6mm, 7mm, 8mm, 9mm, 10mm
- Tweezers
- Pen knife
- Needle nose pliers
- Diagonal cutting pliers
- 6-pc. precision screwdriver set.
- Insulted chip extractor
- 3 pronged parts retriever
- Magnetic telescope picking up tool
- Flash light
- Wire strippers
- Deluxe wire strippers
- PC board brush
- Electrical PCV tape
- Soldering iron
- Solder remover
- Solder wire
- Solder stand
- Metal hammer with rubber
- 9 wrenches
- Mini vacuum cleaner witch accessories
- 1 scalpel
- 20 cable ties
- 1 set with cable terminal attachments



	Order-No. – P.U.
PC Troubleshooting Tool Set, 145-piece	19.06.2031 – 5

LAN Master Engineers Tool Kit, 58-piece

Ideal for electronic / electric telecommunications and computer service workers

It includes all the most frequently need to install, repair or maintenance LANs, computer or TV, radio set and other electronic equipments.

Kit includes:
- Fine tip straight tweezer
- Side cutter 125 mm
- Long nose plier 138 mm
- RJ-45 die set
- RJ-11 die set
- RG-58, RG-59/62, BNC/TNC die set
- RJ-22 die set
- RG-58, RG-59/62 AU BNC/TNC die set
- Supercrimp crimp tool frame
- Spring hook
- Desoldering pump
- Adjustable wrench 152 mm
- Quick heat ceramic soldering iron 110V or 220V
- Straight forceps 152 mm
- Round cable cutter
- Wire stripper tool
- Screwdriver 5 mm
- Screwdriver 6 mm
- Screwdriver #3.2x75 mm
- Screwdriver #0x75 mm
- Screwdriver #5x75 mm
- Screwdriver #1x75 mm
- Screwdriver #2x100 mm
- Desoldering wick
- Precision wire stripper
- Punch down tool with 110/66 blades
- UTP/STP cable stripper
- Utility



	Order-No. – P.U.
LAN Master Engineers Tool Kit, 58-piece	19.06.2049 – 1

Cable Ties / Cable Tie Installation Tool

- Range of cable ties suitable for general cabling use in all indoor or outdoor applications
- Available in 4 different length (15 cm, 25 cm, 30 cm, 44 cm) and 2 different width (3.7 mm, 4.8 mm)
- Additional description field (suitable only for 19.08.3276)
- Polybag with 100 pieces each







Installation Tool
- Tool operation: actuate trigger until cut-off occurs. Cut-off depends on the tension setting selected

	Order-No. – P.U.
Cable Tie, 3.7 mm, angled, 15 cm	19.08.3270 – 200
Cable Tie, 4.8 mm, angled, 25 cm	19.08.3272 – 100
Cable Tie, 4.8 mm, 44 cm	19.08.3274 – 60
Cable Tie, 4.8 mm, with description field, 30 cm	19.08.3276 – 80
Cable Tie Gun	19.06.1000 – 20

VALUE Cable Tunnel Organizer

- Ideal for cable management
- Applicable for all computer cables
- Stable and resistant material, ideal use as a floor cable tunnel
- Bottom of tunnel has pressure sensitive tapes
- Color: Dark grey
- Dimensions (LxW): 100 cm x 6 cm
- Content: 1 cable-tunnel

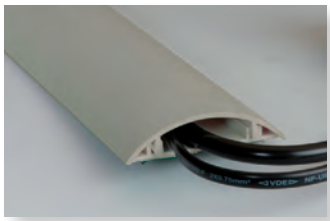

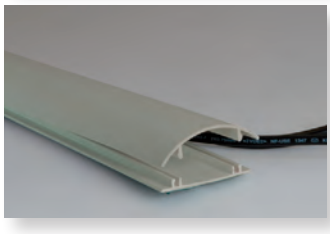

	Order-No. – P.U.
VALUE Cable Tunnel Organizer, Closed, 6 cm x 100 cm	19.99.3235 – 20

VALUE Strap Cable Binder with Flap

VALUE cable ties for simple, fast and flexible cable management - thanks to the detachable strap fastener, cable routing can be adjusted at any time

- Easy to close and reopen
- Neutral and without logos for unobtrusive use
- Ideal for sensitive cables and also for thicker cable harnesses
- Low pressure load on the cable bundle and therefore also ideally suited for fiber optic cables
- Reusable straps with flap
- 15cm length
- 20 pieces per package
- Contents: 20 strap cable ties



	Order-No. – P.U.
VALUE Strap Cable Binder with Flap, black, 15 cm, 20 pieces/set	25.99.5240 – 10

VALUE Strap Cable Tie Roll, Width 10mm

VALUE Strap tape roll with 10mm width and 25m length for clear cable routing - can be cut to size as required and can therefore be adapted for thin or thick cable strands depending on the application

- Easy to close and reopen
- Neutral and without logos for unobtrusive use
- Ideal for sensitive cables and also for thicker cable harnesses
- Very low pressure load on the cable bundle and therefore also ideally suited for LWL / fiber optic cables
- The length of the cable tie can be cut according to requirements

- 10mm width and 25m length
- Contents: 1x VALUE strap band on roll, 10mm wide, 25m long



	Order-No. – P.U.
VALUE Strap Cable Tie Roll, Width 10mm, black, 25m	25.99.5250 – 5
Strap Cable Tie Roll, Width 10mm, green, 25m	25.99.5251 – 5
Strap Cable Tie Roll, Width 10mm, yellow, 25m	25.99.5252 – 5
Strap Cable Tie Roll, Width 10mm, red, 25m	25.99.5253 – 5
Strap Cable Tie Roll, Width 10mm, blue, 25m	25.99.5254 – 5

ROLINE PVC Cable Conduit, Self Closing / Strap Closing

Simple and clean solution for professional cable management

- No more cable clutter under, next to or behind the workstation, TV or stereo system
- The self-rolling ROLINE polyester fabric hose solves your problem and can be attached easily and practically.
- Simply put over the cables to be bundled- without any feeding aid or tools
- No cables or plugs have to be dismantled.
- Fabric hose can be cut to the desired length and bundles cables up to 25mm diameter.
- Protects your cable and is heat resistant

Designed for Professionals

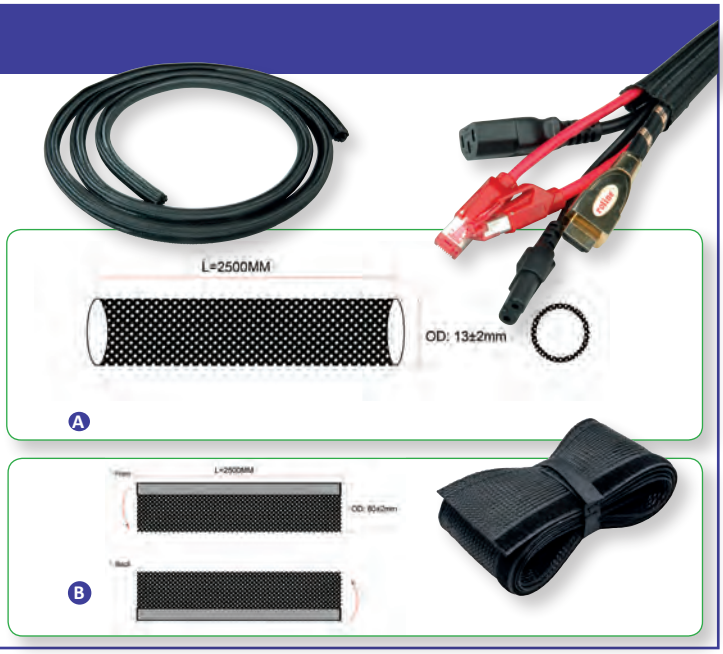

		Order-No. – P.U.
ROLINE PVC Cable Conduit, Self Closing, black, 2.5 m	A	19.08.3160 – 10
ROLINE PVC Cable Conduit, Strap Closing, black, 2.5 m	B	19.08.3161 – 10



Office Equipment / Consumables

9

Mouse Pads 9.02
Wristrests 9.02
VESA Adapters 9.03
LCD Monitor Arms / Mounts . . . . . 9.04 – 9.11, 9.19
Wall Mount Workstation 9.12
Mobile PC Cart . . . . . 9.12 – 9.13
PC Holder . . . . . 9.14 – 9.15
Cable Organizer 9.16
Wall / Ceiling Projector Mount 9.17
Monitor Stand . . . . . 9.18 – 9.19
Antifatigue Floor mat 9.19
PC Workstations 9.20, 9.21
Printer Tables 9.21
Cleaning Sets 9.22

Mouse Pad, Cloth

- Optimal use on smooth surfaces
- Upper layer: Nylon cloth
- Optimized for optical and laser mouses
- Dimensions: 255×215×5mm
- Colour: Black

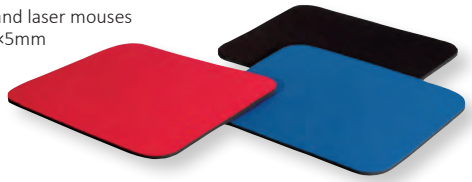

	Order-No.	P.U.
Mouse Pad, Cloth, black	18.01.2040	50
Mouse Pad, Cloth, blue	18.01.2041	50
Mouse Pad, Cloth, red	18.01.2042	50

Laser Mouse Pad

- Mouse pad for optical mice, ideal also for laser mice
- Ultra flat and anti slip surface
- Dimensions: 220 x 180 x 0.4 mm
- Note: Mouse is not included in delivery



	Order-No.	P.U.
Laser Mouse Pad, blue	18.02.2005	200
Laser Mouse Pad, black	18.02.2006	200

ROLINE Notebook Combo Mousepad (280x160x0.5mm)

Perfect fit between most Macbooks, Ultrabooks, Notebooks/Laptops - suitable for cleaning your display/device, as a mousepad and to protect the Notebook keyboard from dirt and dust!

- Designed for professional gamers and office environments
- Provides excellent gliding of the mouse
- Natural rubber base for maximum grip on any surface
- Excellent performance for laser and optical mice
- Material: Surface: high performance textile surface / Base: nature rubber
- Colour: Black



roline®
Designed for Professionals

	Order-No.	P.U.
ROLINE Notebook Combo Mousepad (280x160x0.5mm), black	18.01.2047	20

ROLINE Desk Pad, Keyboard and Mouse Pad

The perfect desk pad - big enough for keyboard and mouse, it has a rubberized underside and a silky smooth surface for precise, low-friction movement.

- Excellent sliding ability for the mouse, enough space for the keyboard
- Particularly fine weave of the surface textile for high speed and high accuracy
- Rubberized underside for maximum grip on any surface
- Good wrist support- low height difference between mat and desk
- Highest performance for laser and optical mice
- Red decorative seam as edge protection
- Material: Top side: Special high-performance textile / Underside: Rubberized
- Dimensions: 780 x 300 x 5 mm
- Color: Black / Red

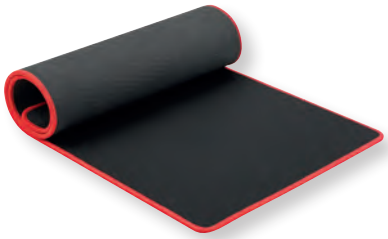

roline®
Designed for Professionals

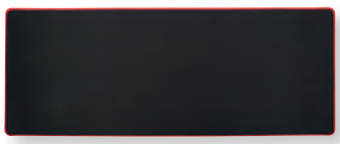

	Order-No.	P.U.
ROLINE Desk Pad, Keyboard and Mouse Pad	18.01.2048	25

Silicon Mousepad with Wristrest, transparent blue

- During work with your Mouse your wrist can rest on the integrated Palmrest
- The silicon filling will adapt itself to your wrist, effective support will help you in giving you a relaxed feeling once working with your mouse
- Colour: transparent blue
- Dimensions: 227 x 250 x 22 mm
- Note: Mouse is not included in delivery



	Order-No.	P.U.
Silicon Mousepad with Wristrest, transparent blue	18.01.2029	24

Silicon Wrist Pad for Keyboard, transparent blue

- Great outcome for frequent PC users; it will reduce the danger of RSI (Repetitive Strain Injury)
- The silicon filling will adapt itself to your wrist, effective support will help you in giving you a relaxed feeling once working with your keyboard
- Suitable for all current keyboards (with straight side)
- Colour: transparent blue
- Dimensions: 455x80x22 mm





	Order-No.	P.U.
Silicon Wrist Pad for Keyboard, transparent blue	18.02.3033	20

ROLINE VESA Adapter

- **17.03.1100/17.03.1102:**
- Accommodates standard VESA 100 compliant monitors (100 x 100 mm resp. 100 x 200 mm) to mounting systems with VESA 75 (75 x 75 mm)

17.03.1106:
- Accommodates monitors with standard VESA 100, 200 (100 x 200 and 200 x 200 mm) to mounting systems with VESA 100 (100 x 100 mm)
- Variable adjustable

17.03.1103:
- Accommodates monitors with standard VESA 400, 200 (400 x 400 mm) to mounting systems with VESA 100 (100 x 100 mm)
- Variable adjustable

roline® Designed for Professionals

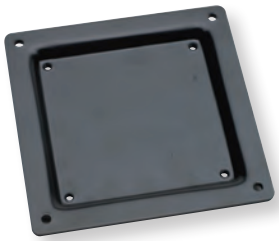





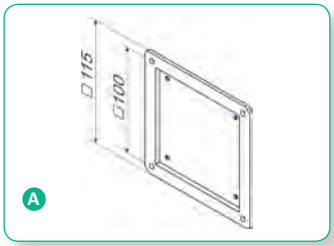

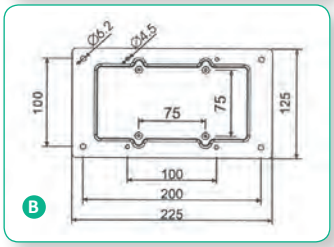

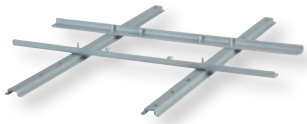

		Order-No.	– P.U.
ROLINE VESA Adapter, black	A	17.03.1100	– 50
ROLINE VESA Adapter 75x75 to 100x100/100x200, black	B	17.03.1102	– 20
ROLINE VESA Adapter 100x100-100x200/200x200, variable, silver		17.03.1106	– 20
ROLINE VESA Adapter 100x100-400x400, variable, silver	C	17.03.1103	– 20

ROLINE LCD Monitor Wall Mount Kits

- Space saving mounting of monitor on Walls
- VESA 75 fixation

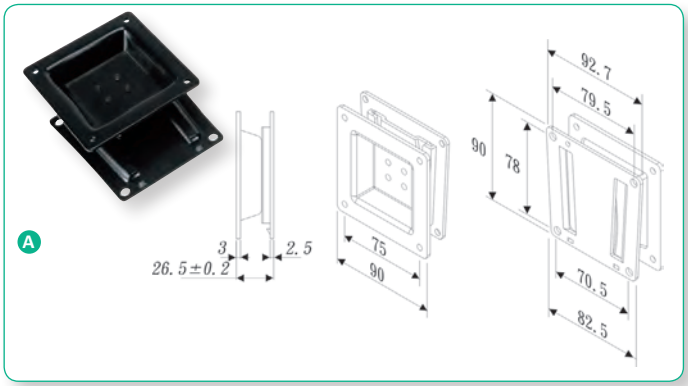

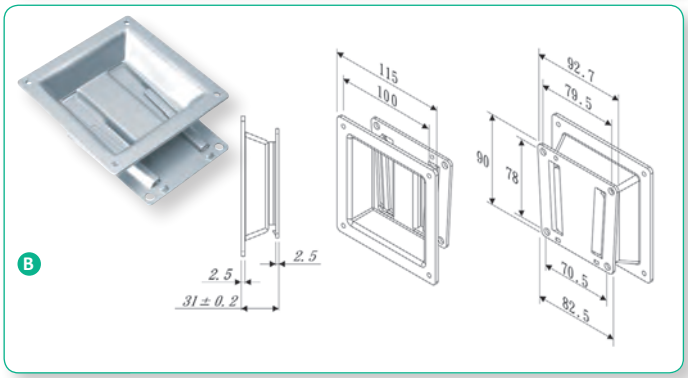

roline® Designed for Professionals

Technical data:	17.03.1180	17.03.1181
Load capacity:	1-20 kg	1-20 kg
VESA:	75x75 mm	100x100 mm

		Order-No.	– P.U.
ROLINE LCD Monitor Wall Mount Kit, -20 kg, VESA 75	A	17.03.1180	– 25
ROLINE LCD Monitor Wall Mount Kit, -20 kg, VESA 100	B	17.03.1181	– 25

ROLINE Vertical VESA Adjustment Plate

- Perfect option to add more **VERTICAL** adjustability (15 cm mobility to go up and down) to an existing monitor mount
- Track-mounted monitor holder
- Easy installation on most monitor mounts with standard VESA plates (75mm x 75mm/100mm x 100mm)
- The toothed track keeps the adjustment smooth and stable
- Maximum load up to 8 kg

roline® Designed for Professionals



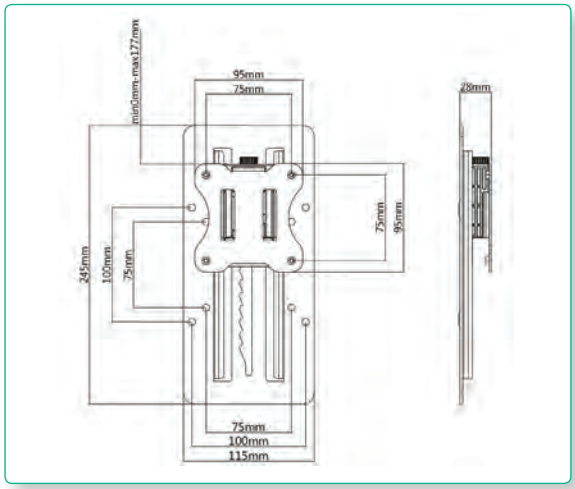





	Order-No.	– P.U.
ROLINE Vertical VESA adjustment plate	17.03.1101	– 16

VALUE LCD Monitor Wall Mount Kit

- Space saving and solid mounting of a monitor on walls
- Easy to mount with sliding bracket design (2 pieces)- one piece has to be fixed to the wall, the other one has to be screwed with VESA on the monitor
- Slim design, just 15mm from the wall
- Monitor has to be mount from the upside into the wall mount
- Meets with VESA 75 (75 x 75 mm) or VESA 100 (100 x 100 mm)
- Load capacity: 25 kg



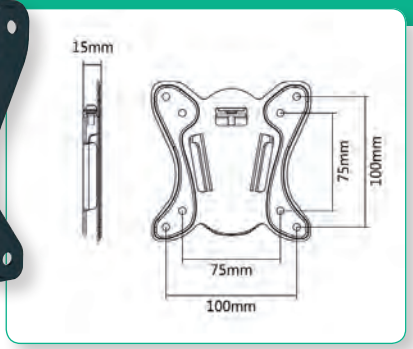

	Order-No.	– P.U.
VALUE LCD Monitor Wall Mount Kit	17.99.1141	– 10

VALUE LCD Monitor Wall Mount Kit

- For screen sizes: 36 cm up to 61 cm
- Weight capacity: up to 15 kg
- Tiltable: 160° up or down
- Swiveling (Pivot function): 270°
- Meets VESA standard VESA 75 (75x75 mm) and VESA 100 (100x100 mm)
- Material: Cold steel construction
- Colour: Black

Technical data:	17.99.1120	17.99.1121
Fixing:	wall mount	wall mount
Load capacity:	15 kg	15 kg
Screen size:	36 cm up to 61 cm	36 cm up to 61 cm
Pivot function:	270°	270°
Tiltable up or down:	160°	180°
Rotatable right or left:	-	180°
Arm length:	up to 90 mm	up to 130 mm

A



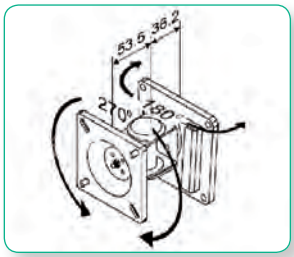



B

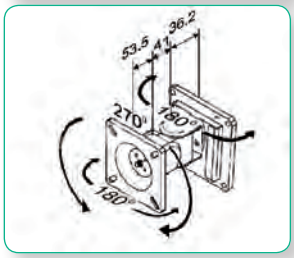

		Order-No.	– P.U.
VALUE LCD Monitor Wall Mount Kit, 1 Joint	A	17.99.1120	– 10
VALUE LCD Monitor Wall Mount Kit, black, 2 Joints	B	17.99.1121	– 10

VALUE LCD Monitor Wall Mount Kit

- Space saving and solid mounting of a monitor on walls
- Screen can be swiveled, tilted and rotated
- Easy to mount with sliding bracket design
- Meets with VESA 75 x or 100 x 100 mm

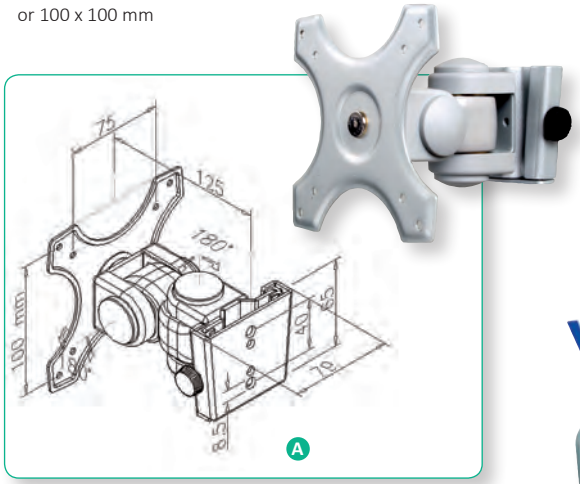

A

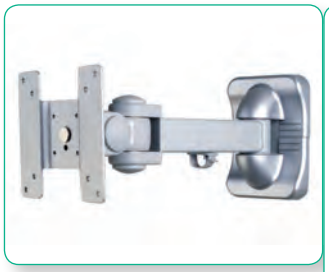

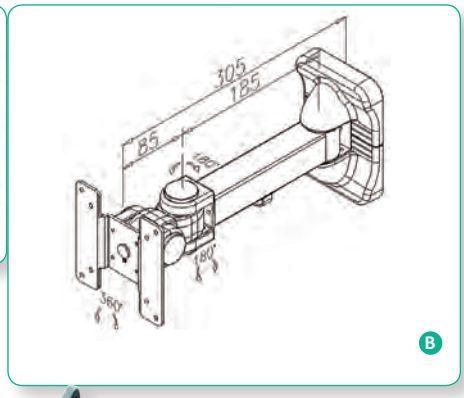

B



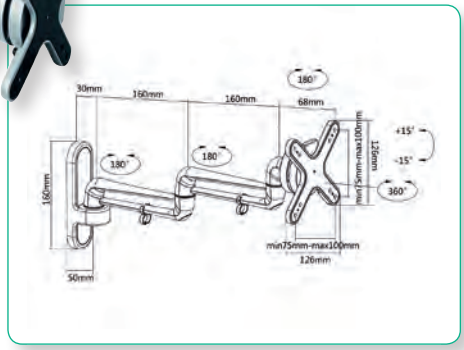

C

Technical data:	17.99.1125	17.99.1126	17.99.1129
Fixing:	wall mount	wall mount	wall mount
Load capacity:	up to 8 kg	up to 10 kg	up to 15 kg
Pivot function:	yes	yes	yes
Arm length:	10 cm	30 cm	41.8 cm

		Order-No.	– P.U.
VALUE LCD Monitor Wall Mount Kit, 2 Joints	A	17.99.1125	– 12
VALUE LCD Monitor Wall Mount Kit, 3 Joints	B	17.99.1126	– 6
VALUE LCD Monitor Wall Mount Kit, 5 Joints	C	17.99.1129	– 5

ROLINE LCD Monitor Wall Mount Kit

- Space saving mounting of monitor on walls
- VESA 75 (75 x 75 mm) fixation
- Inclination adjustable over joints
- Pivot function: 270°





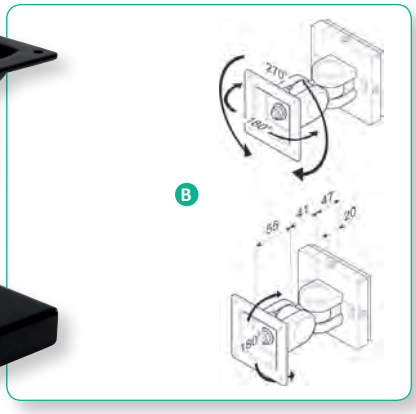

roline®
Designed for Professionals



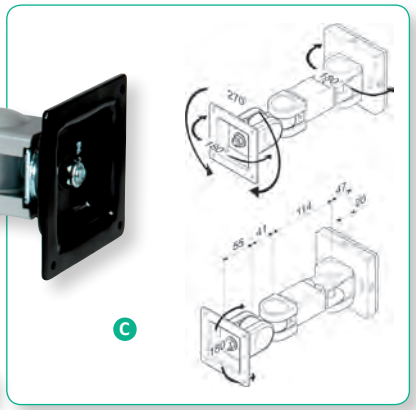

Technical data:	17.03.1124	17.03.1125	17.03.1126	17.03.1123
Fixing:	wall mount	wall mount	wall mount	wall mount
Load capacity:	1-6 kg	1-8 kg	1-6 kg	1-6 kg
Pivot function:	270°	270°	270°	270°
Arm length:	55 mm	90 mm	200 mm	340 mm

		Order-No.	– P.U.
ROLINE LCD Monitor Wall Mount Kit, 1 Joint	A	17.03.1124	– 12
ROLINE LCD Monitor Wall Mount Kit, 2 Joints	B	17.03.1125	– 12
ROLINE LCD Monitor Wall Mount Kit, 3 Joints	C	17.03.1126	– 12
ROLINE LCD Monitor Arm Standard, Wall Mount, 4 Joints		17.03.1123	– 6

ROLINE LCD Monitor Arm, Wall Mount

Swing- and tiltable wall mount for monitors and TVs!

- Aesthetic design offers a pleasant environment
- Broad range of flexibility
- Quick and simple installation
- Rotation: 180° for portrait or landscape viewing (right & left)
- Meets VESA 75 (75 x 75 mm), VESA 100 (100 x 100 mm)
- Solid model made out of black painted iron
- Colour: black



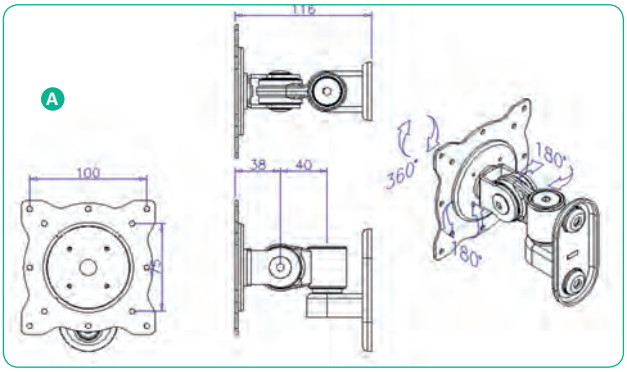



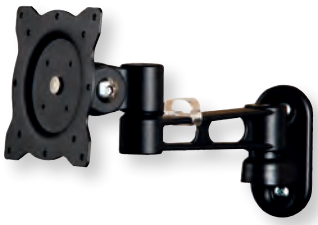

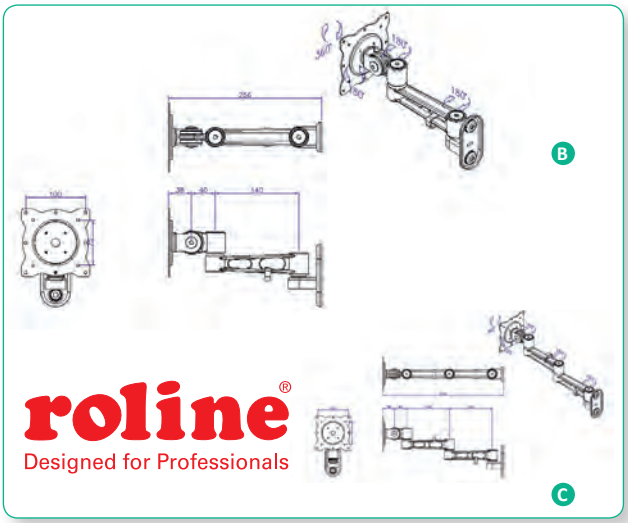

roline®
Designed for Professionals

Technical data:	17.03.1196	17.03.1197	17.03.1196
Fixing:	wall mount	wall mount	wall mount
Load capacity:	1-10 kg	1-10 kg	1-10 kg
Pivot function:	180°	180°	180°
Number of pivots:	3	4	5
Tiltable up and down:	80°	80°	80°
Arm length:	116 mm	256 mm	395 mm

		Order-No.	– P.U.
ROLINE LCD Monitor Arm, Wall Mount, 3 Joints, black	A	17.03.1196	– 4
ROLINE LCD Monitor Arm, Wall Mount, 4 Joints, black	B	17.03.1197	– 6
ROLINE LCD Monitor Arm, Wall Mount, 5 Joints, black	C	17.03.1198	– 6

VALUE LCD Monitor Arm, Wall Mount, 4 / 5 Joints, Pivot

LCD monitor arm, for easy and reliable adjustment of a monitor weighing up to 8kg and VESA 75 / 100!

The Single LCD Arm makes your workstation more efficient and you gain more workspace.

- Designed for one monitor
- The aluminium arm is easy to adjust for swinging into any position
- The display can be tilted to any angle you need
- Spring assistant system easily adjusts the height of monitor
- Load capacity: up to 8 kg each monitor
- Meets VESA 75 (75 x 75 mm) or VESA 100 (100 x 100 mm)
- Arm length: up to 262 mm
- For wall mount

Video



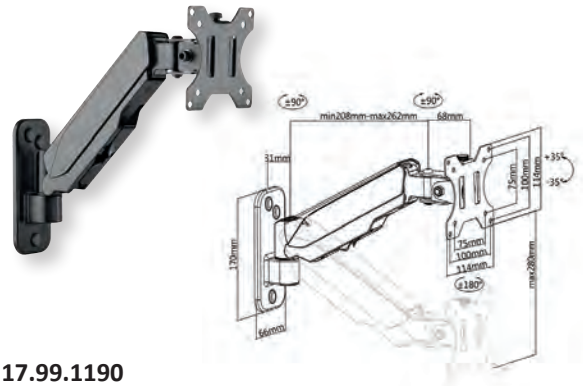

17.99.1190

Video

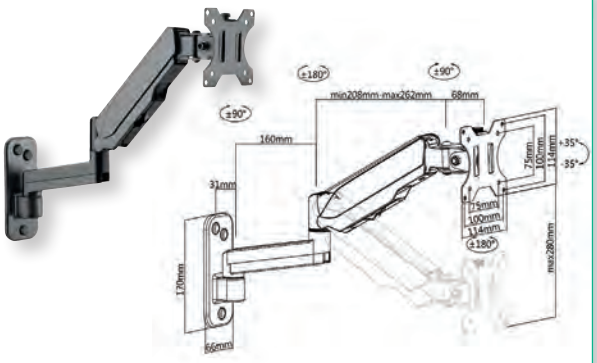

17.99.1191

	Order-No.	– P.U.
VALUE LCD Monitor Arm, Wall Mount, 4 Joints, Pivot, black	17.99.1190	– 4
VALUE LCD Monitor Arm, Wall Mount, 5 Joints, Pivot, black	17.99.1191	– 4

ROLINE LCD Bridge, Desk Mount

- Post arm series suitable for sites where several monitors are required at the same time, such as financial institution, banking company, stock market, LAN system, IT communication company,(hospital), mainframe centre,building control centre and control tower, etc.
- Position of slot is adjustable to proper height
- Complete with cable organizer on the rear to route cables
- Wall mounting

Technical data:	**17.03.1163**	**17.03.1162**
Fixing:	desk clamp (15-70 mm)	desk clamp (15-70 mm)
Load capacity:	36 kg	50 kg
Length of bridge:	1300 mm	1300 mm
Particularities:	cable management	cable management
	17.03.1165	**17.03.1166**
Load capacity:	1-8 kg	1-14 kg
VESA standard:	VESA 75	VESA 75/100
Joints:	2	2

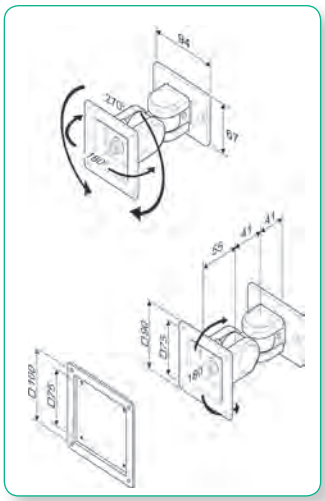

C

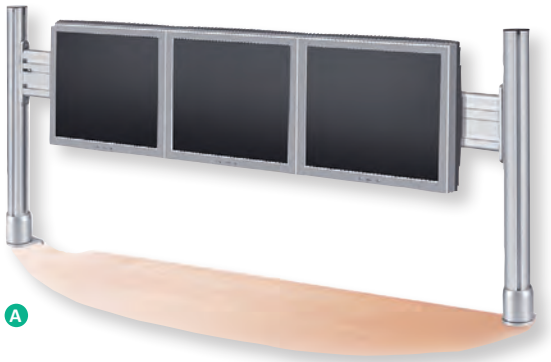

A

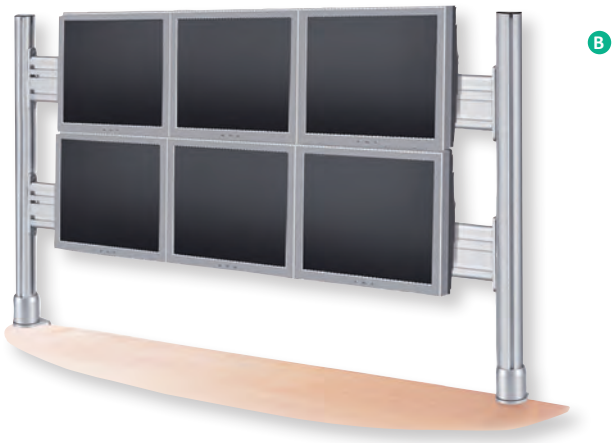

B

		Order-No.	– P.U.
ROLINE LCD Bridge for 1x3 56 cm LCD Monitors, Desk Clamp	A	17.03.1163	– 1
ROLINE LCD Bridge for 2x3 56 cm LCD Monitors, Desk Clamp	B	17.03.1162	– 1
ROLINE Monitorfixing for Bridge, up to 8 kg	C	17.03.1165	– 12
ROLINE Monitorfixing for Bridge, up to 14 kg	C	17.03.1166	– 12



roline®
Designed for Professionals

ROLINE LCD Monitor Arm, Wall Mount, 2 Joints



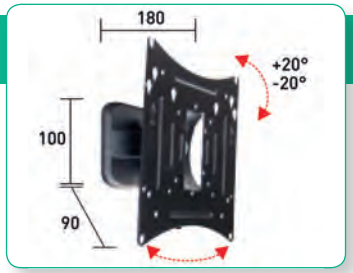

- Quick and simple installation
- Meets VESA 50/75/100/150/200x100/200
- Wall mount fixing
- Material: steel
- Colour: black

TV size: 25- 100cm (10“- 40“)
Load capacity: up to 20 kg
No. of pivots: 2
Max. arm length: 9 cm
Tiltable up and down: 20°

	Order-No. – P.U.
ROLINE LCD Monitor Arm, Wall Mount, 2 Joints	17.03.0005 – 1

ROLINE LCD Monitor Arm, Wall Mount, 3 Joints



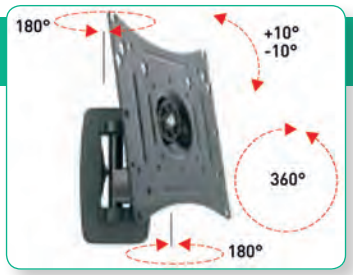

- Quick and simple installation
- Meets VESA 75/100/200x100
- Wall mount fixing
- Material: steel
- Colour: black

TV size: 25- 81 cm (10“- 32“)
Load capacity: up to 20 kg
No. of pivots: 5
Max. arm length: 12,2 cm
Tiltable up and down: 20°

	Order-No. – P.U.
ROLINE LCD Monitor Arm, Wall Mount, 3 Joints	17.03.0006 – 1

ROLINE LCD Monitor Arm, Extra, Wall Mount, 3 Joints



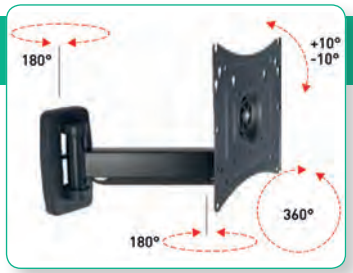

- Quick and simple installation
- Meets VESA 75/100/200x100/180x120/200
- Wall mount fixing
- Material: steel
- Colour: black

TV size: 25- 100 cm (10“- 40“)
Load capacity: up to 25 kg
No. of pivots: 5
Max. arm length: 28 cm
Tiltable up and down: 10°

	Order-No. – P.U.
ROLINE LCD Monitor Arm, Extra, Wall Mount, 3 Joints	17.03.0007 – 1

ROLINE LCD Monitor Arm, Wall Mount, 4 Joints





- Quick and simple installation
- Meets VESA 75/100/200x100
- Wall mount fixing
- Material: steel
- Colour: black

TV size: 25- 81 cm (10“- 32“)
Load capacity: up to 20 kg
No. of pivots: 4
Max. arm length: 43 cm
Tiltable up and down: 20°

	Order-No. – P.U.
ROLINE LCD Monitor Arm, Wall Mount, 4 Joints	17.03.0008 – 1

ROLINE LCD Monitor Arm, Extra, Wall Mount, 5 Joints

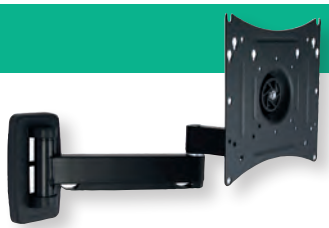

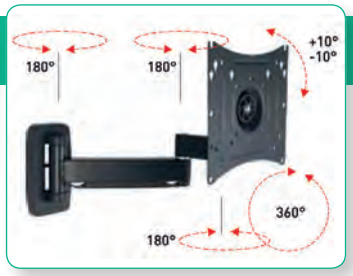

- Quick and simple installation
- Meets VESA 75/100/200x100/180x120/200
- Wall mount fixing
- Material: steel
- Colour: black

TV size: 25- 100 cm (10“- 40“)
Load capacity: up to 25 kg
No. of pivots: 6
Max. arm length: 36 cm
Tiltable up and down: 10°

	Order-No. – P.U.
ROLINE LCD Monitor Arm, Extra, Wall Mount, 5 Joints	17.03.0009 – 1

ROLINE LCD Monitor Stand Pneumatic, Wall Mount, Pivot

- Delicate and streamlined design
- Made of high quality aluminum alloy
- Gas spring integrated allows users to move the LCD panel in most positions at will
- Meets VESA 75 (75x75 mm) or VESA 100 (100x100 mm)
- Special feature: Pivot function- screen is 90 degrees rotatable
- Wall Mount
- A clever cable management is built into the rear arm

Specifications:
- Arm extension: ~ 486 mm
- Lift: 200 ~ 500 mm
- Monitor pivot: 180°
- Rotation: 360° (arm & display)
- Loading capacity: 3 ~ 8 kg

roline®
Designed for Professionals

Technical data:	17.03.1178
Fixing:	wall mount
Load capacity:	3 - 8 kg
No. of pivots:	4
Pivot function:	yes
Arm length:	up to 486 mm
Particularities:	gas spring, cable management



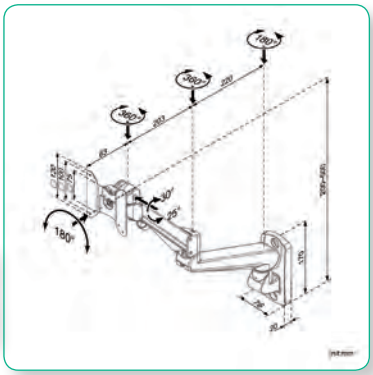

	Order-No.	– P.U.
ROLINE LCD Monitor Stand Pneumatic, Wall Mount, Pivot, 2 Joints	17.03.1178	– 1

ROLINE LCD Monitor Stand Pneumatic, Desk Clamp, Pivot

- These pneumatic LCD monitor arms allow you to adjust the monitor to the most comfortable viewing angle
- Arms provide up and down, left and right, front and back pivot and tilting capability
- Desk clamp mount (max. 56mm) and grommet mount (max. 36mm)
- Monitor weight adjustment
- Monitor arms with wall mount fixing
- Meet VESA 75 (75 x 75 mm) or VESA 100 (100 x 100 mm)

Technical data:	17.03.1149	17.03.1147	17.03.1148	17.03.1122
Fixing:	desk clamp	desk clamp	desk clamp	wall mount
Load capacity:	3 - 8 kg	3 - 8 kg	3 - 8 kg	3 - 8 kg
No. of pivots:	4	4	4	4
Pivot function:	yes	yes	yes	yes
Arm length:	up to 266 mm	up to 486 mm	up to 486 mm	up to 440 mm
Particularities:	gas spring, cable management -	gas spring, cable management -	gas spring, cable management Dual LCD	gas spring cable management weight adjustment



A

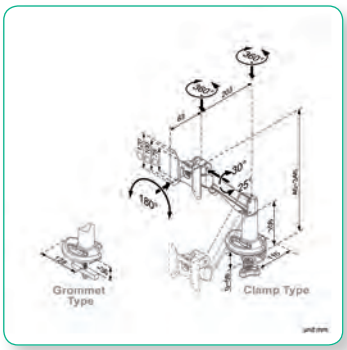



C

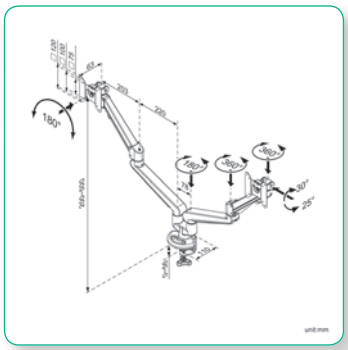



B

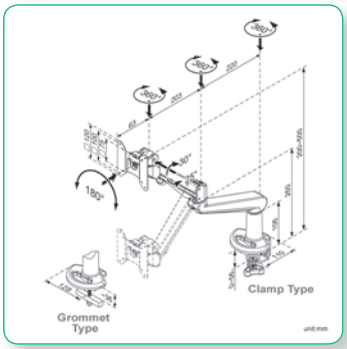



D

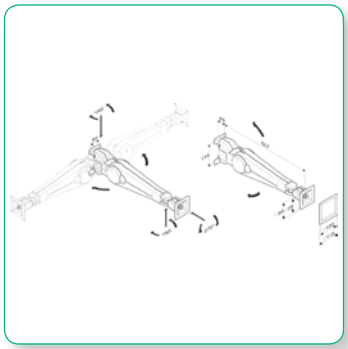

		Order-No.	– P.U.
ROLINE LCD Monitor Stand Pneumatic, Desk Clamp, Pivot, 1 Joint	A	17.03.1149	– 1
ROLINE LCD Monitor Stand Pneumatic, Desk Clamp, Pivot, 2 Joints	B	17.03.1147	– 1
ROLINE Dual LCD Monitor Stand Pneumatic, Desk Clamp, Pivot, 2 Joints	C	17.03.1148	– 1
ROLINE LCD Monitor Arm Pneumatic, Pivot, Wall Mount	D	17.03.1122	– 2

roline®
Designed for Professionals

VALUE Single LCD Monitor Arms, Desk Clamp

- Aluminum two-step arm with four joints
- With a C-clamp for desk mount up to 8 cm thickness
- The height of the LCD monitor is adjustable
- Meets VESA 75 (75 x 75 mm) or VESA 100 (100 x 100 mm)
- Load capacity: up to 10 kg









Technical data:	17.99.1132	17.99.1133	17.99.1136
Load capacity:	10 kg	2x 6 kg	3x 8 kg
No. of pivots:	5	2x 5	5
Fixing:	Desk clamp	Desk clamp	Desk clamp
Arm length:	450 mm	2x 350 mm	1290 mm

		Order-No.	– P.U.
VALUE Single LCD Monitor Arm, 4 Joints, Desk Clamp	A	17.99.1132	– 4
VALUE Dual LCD Monitor Arm, Desk Clamp, 4 Joints	B	17.99.1133	– 2
VALUE Triple LCD Arm, Desk Clamp, black	C	17.99.1136	– 1

ROLINE Single LCD Monitor Arms, Desk Clamp

- This flexible monitor arm allows the user to adjust a monitor with perfect angle of view
- Fixing by desk clamp (up to 100 mm)
- The sturdy main frame can still move smoothly under heavy load
- High quality aluminum alloy
- Meets VESA 75 (75 x 75 mm) or VESA 100 (100 x 100 mm)
- Load capacity: 12 kg
- Length of pillar: 400 mm
- Arm length: 190 mm



roline®
Designed for Professionals

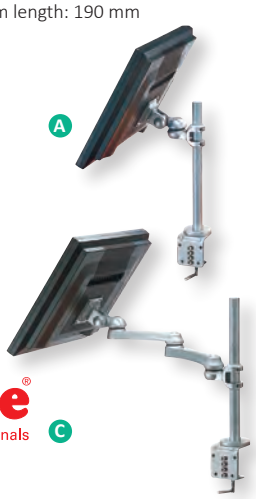

Technical Data:	17.03.1132/1230	17.03.1133	17.03.1134
Fixing:	desk clamp (up to 100 mm)	desk clamp (up to 100 mm)	desk clamp (up to 100 mm)
Load capacity:	8 kg	10 kg	12 kg
Length of pillar:	400 mm	400 mm	400 mm
Arm length:	620 mm	440 mm	190 mm

		Order-No.	– P.U.
ROLINE Single LCD Monitor Arm, 2 Joints, Desk Clamp	A	17.03.1134	– 4
ROLINE Single LCD Monitor Arm, 3 Joints, Desk Clamp	B	17.03.1133	– 2
ROLINE Single LCD Monitor Arm, 5 Joints, Desk Clamp	C	17.03.1132	– 2
ROLINE Dual LCD Monitor Arm, Desk Clamp, 4 Joints	D	17.03.1230	– 1

VALUE LCD Monitor Arm Standard, Wall Mount or Desk Clamp

- Provides the screen at three positions for the most comfortable viewing level and provide the monitor or LCD TV tilt, left or right
- Supports wall mounting as well as desk clamp (with C-clamp mounting bracket)
- Meets VESA 75 (75 * 75 or VESA 100 (100 *100 mm)



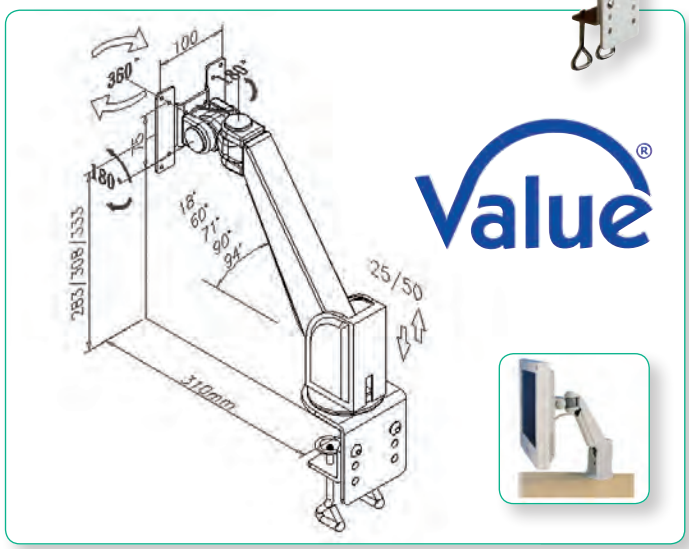

	Order-No.	– P.U.
VALUE LCD Monitor Arm Standard, Wall Mount or Desk Clamp	17.99.1123	– 4

VALUE Single/ Dual LCD Monitor Stand Pneumatic, Desk Clamp, Pivot

LCD monitor arm with gas spring for easy and reliable adjustment of a monitor weighing up to 6.5kg and VESA 75 / 100!

- Made of high quality aluminum alloy
- Meets VESA 75 (75x75 mm) or VESA 100 (100x100 mm)
- Special feature: Pivot function- screen is 90 degrees rotatable
- Small desktop mount saves space
- A clever cable management is built into the rear arm

Specifications:

- Arm extension: ~ 500 mm
- Lift: 160 ~ 410 mm
- Monitor pivot: 180°
- Rotation: 360° (arm & display)
- Loading capacity: max. 6.5 kg



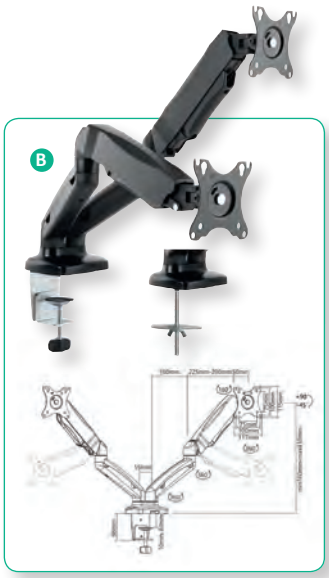

	Order-No.	– P.U.
VALUE LCD Monitor Stand Pneumatic, Desk Clamp, Pivot, 2 Joints	A 17.99.1155	– 4
VALUE Dual LCD Monitor Stand Pneumatic, Desk Clamp, Pivot, 2 Joints	B 17.99.1163	– 3

VALUE LCD Monitor Arm, Desk Clamp, 6 Joints, Pivot

LCD monitor arm, for easy and reliable adjustment of a monitor weighing up to 8kg and VESA 75 / 100!
The Single LCD Arm makes your workstation more efficient and you gain more workspace.
- Designed for one monitor
- The aluminium arm is easy to adjust for swinging into any position
- The display can be tilted to any angle you need
- Spring assistant system easily adjusts the height of monitor
- Load capacity: up to 8 kg each monitor
- Meets VESA 75 (75 x 75 mm) or VESA 100 (100 x 100 mm)
- Arm length: up to 2x 550 mm
- With a C-clamp for desk mount



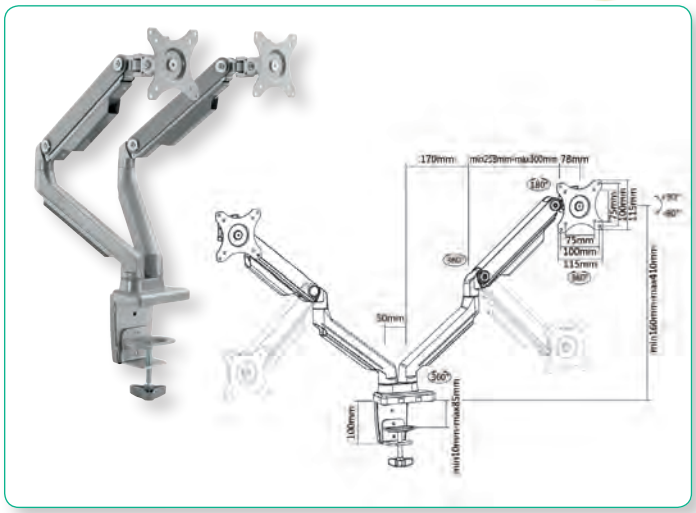

	Order-No.	P.U.
VALUE Dual LCD Monitor Arm, Desk Clamp, 6 Joints, Pivot, silver	17.99.1162	3

VALUE LCD Monitor Stand Pneumatic, Desk Clamp, 5 Joints, Pivot

Gas spring integrated allows users to move the LCD panel in most positions at will
- Made of high quality aluminum alloy
- Meets VESA 75 (75x75 mm) or VESA 100 (100x100 mm)
- Special feature: Pivot function- screen is 90 degrees rotatable
- Small desktop mount saves space
- A clever cable management is built into the rear arm

Specifications:
- Arm extension: ~ 605 mm
- Lift: 170 ~ 500 mm
- Monitor pivot: 180°
- Rotation: 360° (arm & display)
- Loading capacity: max. 9 kg

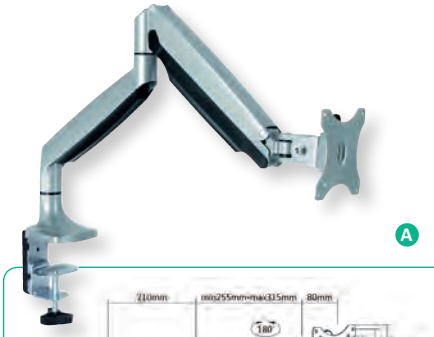
A

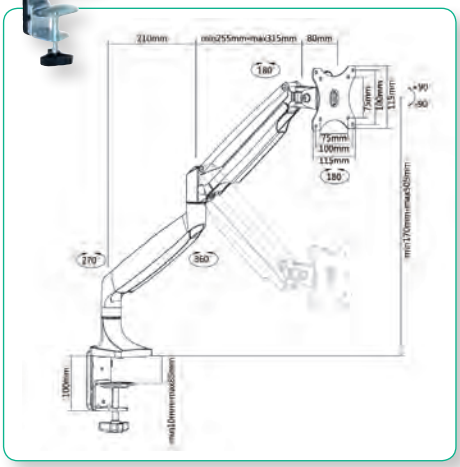


B

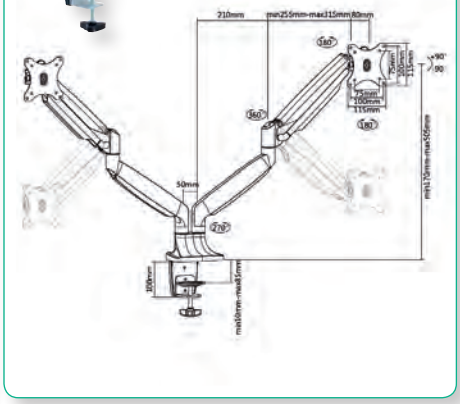

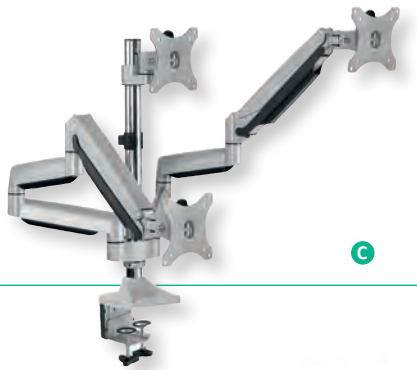
C

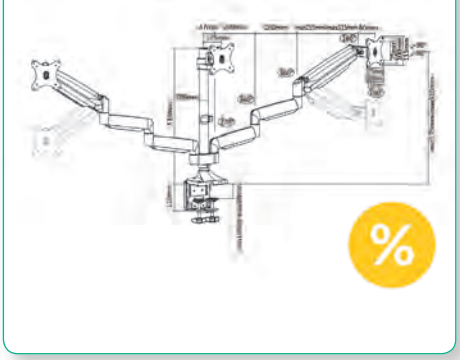

		Order-No.	P.U.
VALUE LCD Monitor Stand Pneumatic, Desk Clamp, 5 Joints, Pivot	A	17.99.1145	4
VALUE Dual LCD Monitor Arm, Desk Clamp, 6 Joints, height adjustable separately, gas spring	B	17.99.1147	2
VALUE Triple LCD Monitor Arm, Desk Clamp, 6 Joints, height adjustable separately, gas spring, silver	C	17.99.1160	2

ROLINE Single / Dual LCD Monitor Stand Pneumatic, Desk Clamp, Pivot, Heavy Duty, <= 15 kg

LCD monitor arm, for easy and reliable adjustment of a monitor weighing up to 15kg (weight adjustment between 1kg and 15kg) and VESA 75/100!

- Delicate and streamlined design
- Made of high quality aluminum alloy
- Gas spring integrated allows users to move the LCD panel in most positions at will
- Meets VESA 75 (75x75 mm) or VESA 100 (100x100 mm)
- Special feature: Pivot function- screen is 90 degrees rotatable
- Small desktop mount saves space
- A clever cable management is built into the rear arm

Specifications:
- Arm extension: ~ 596 mm
- Lift: 255 ~ 585 mm
- Monitor pivot: 180°
- Rotation: 180° (arm & display)
- Loading capacity: <= 15 kg



17.03.1116



17.03.1117

Video

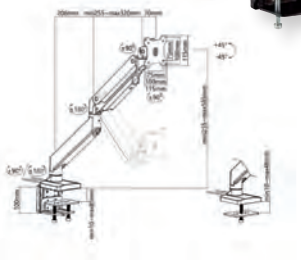

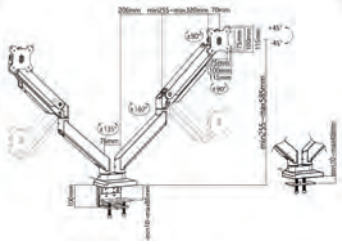

Video

roline®
Designed for Professionals





	Order-No.	– P.U.
ROLINE LCD Monitor Stand Pneumatic, Desk Clamp, Pivot, <= 15 kg, 5 Joints	17.03.1116	– 4
ROLINE Dual LCD Monitor Stand Pneumatic, Desk Clamp, Pivot, <=15 kg, 5 Joints	17.03.1117	– 2

VALUE Dual LCD Monitor Arm, Desk Clamp, height adjustable separately

The Dual LCD Arm makes your workstation more efficient and you gain more workspace.
- Designed for two monitors
- The two aluminium arms are easy to adjust for swinging into any position
- Each display can be tilted to any angle you need
- The height of the LCD monitors is for both monitors separately adjustable
- Load capacity: up to 5 kg each monitor
- Meets VESA 75 (75 x 75 mm) or VESA 100 (100 x 100 mm)
- Arm length: up to 2x 350 mm
- With a C-clamp for desk mount







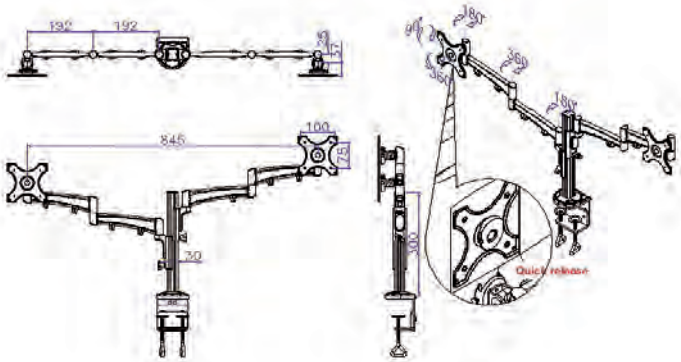

Value®

	Order-No.	– P.U.
VALUE Dual LCD Monitor Arm, Desk Clamp, 4 Joints, height adjustable separately	17.99.1134	– 2

VALUE Wallmount Workstation, Pneumatic

MEDICAL ENVIRONMENT

- This is a complete solution that accommodates a LCD, keyboard and CPU, creating a sit-stand workstation
- It is perfect for space-constrained areas by simply fold the keyboard and LCD tight against the wall when not in use
- This wall mounted computer workstations include a sturdy 90.5mm (width) x 500mm (length) x 20mm (depth) (x 2pcs.) aluminum posts that mounts to wall
- Articulating arms built-in VESA 75/100 compliant mount bracket can be tilted, panned and rotated.
- The CPU/power supply holder adjusts to hold items up to 100mm (width) securely and includes non-skid cushions to prevent marring
- CPU holder weight capacity: up to 10kg
- Keyboard holder weight capacity: 3-5kg
- Monitor holder weight capacity: 3-5kg

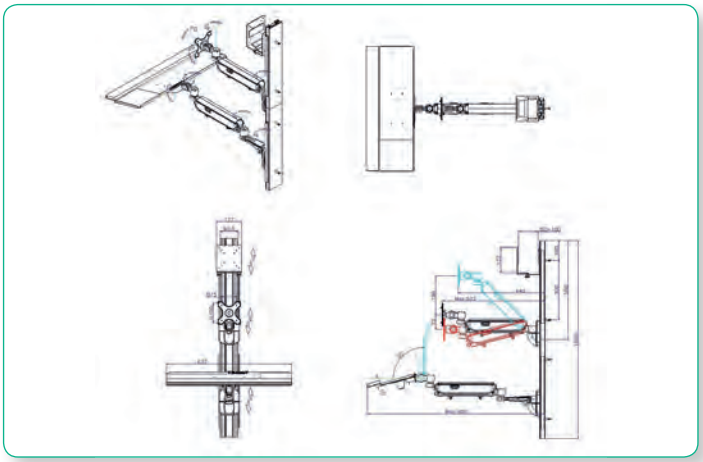



	Order-No. – P.U.
VALUE Wallmount Workstation, Pneumatic	17.99.1139 – 1

VALUE Mobile PC Cart, silver

MEDICAL ENVIRONMENT

- Mobile computing platform that can be used in factories, hospitals, etc.
- This model is fitted with wheels and allows easy movment of a full PC setup
- Carries one pc tower, keyboard and mouse platform and a LCD monitor
- Monitor and keyboard/mouse can be easily positioned to the exact working height
- For monitors with VESA 75 (75 x 75 mm) resp. VESA 100 (100 x 100 mm)
- LCD monitor adapter bracket provides swivel, tilt and rotation function
- Adjustable LCD monitor height from 110 cm to 170 cm
- 5 wheels, whereof 3 are lockable

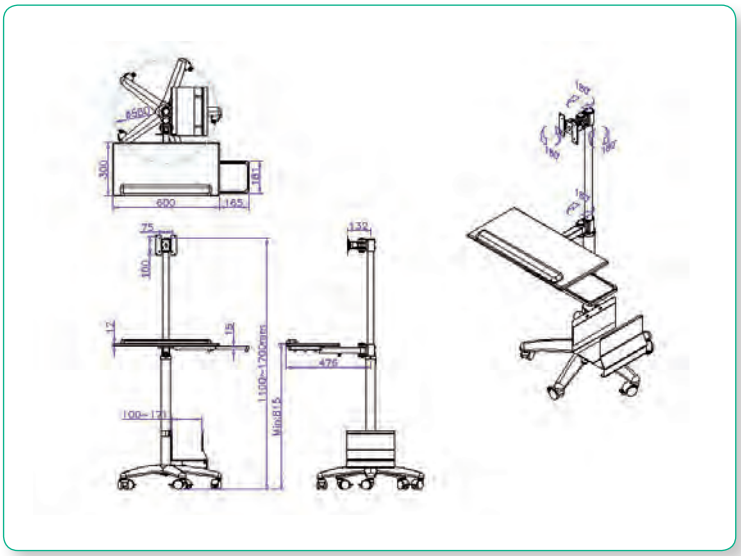



	Order-No. – P.U.
VALUE Mobile PC Cart, silver	17.99.1174 – 1

ROLINE LCD TV + PC Mobile Computing Platform

MEDICAL ENVIRONMENT

- A mobile computing platform that can be used in factories, hospitals, shopping malls, retail stores and department stores, etc.
- Adaptable for sitting or standing users and adjusts to different user heights
- For monitors with VESA 75 (75 x 75 mm) resp. VESA 100 (100 x 100 mm)
- Pivots upwards to 10 degrees and downwards to 25 degrees
- Mouse support tray can be attached to the right or left hand side
- Safety belt adjusts for different sizes of CPU holders and UPS
- Material: aluminum alloy which has a neat and artistic appearance
- 5 wheels, whereof 3 are lockable
- Height: 180 cm



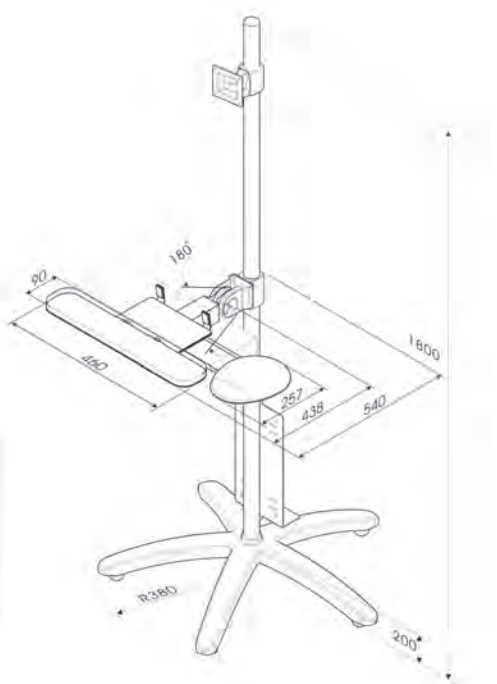

roline®
Designed for Professionals

	Order-No. – P.U.
ROLINE LCD TV + PC Mobile Computing Platform, 180 cm	17.03.1174 – 1

ROLINE LCD TV+PC Mobile Computing Workstation

MEDICAL ENVIRONMENT

- A mobile computing platform that can be used in factories, hospitals, shopping malls, retail stores and department stores, etc.
- Adaptable for sitting or standing users and adjusts to different user heights
- For monitors with VESA 75 (75 x 75 mm) resp. VESA 100 (100 x 100 mm)
- Locks your laptop in a drawer for anti-theft and offers a clean desktop for working
- Accommodates widescreen laptops with 17“ screen
- Height adjustable working area is comfortable for sitting or standing users
- Pull-out keyboard storage and mouse stage can be on the left or on the right side
- Cable management
- This model is fitted with wheels for easy movement and with lock while working
- Help to improve workflow efficiency and upgrade patient care
- Install dual LCD arm to have the monitor in a better viewing position
- Height of monitor can be adjustated
- Monitor can be swiveled, rotated and tilted
- Max loading including monitor: 5-8 kg
- Mouse support tray can be attached to the right or left hand side
- Additional CPU holder



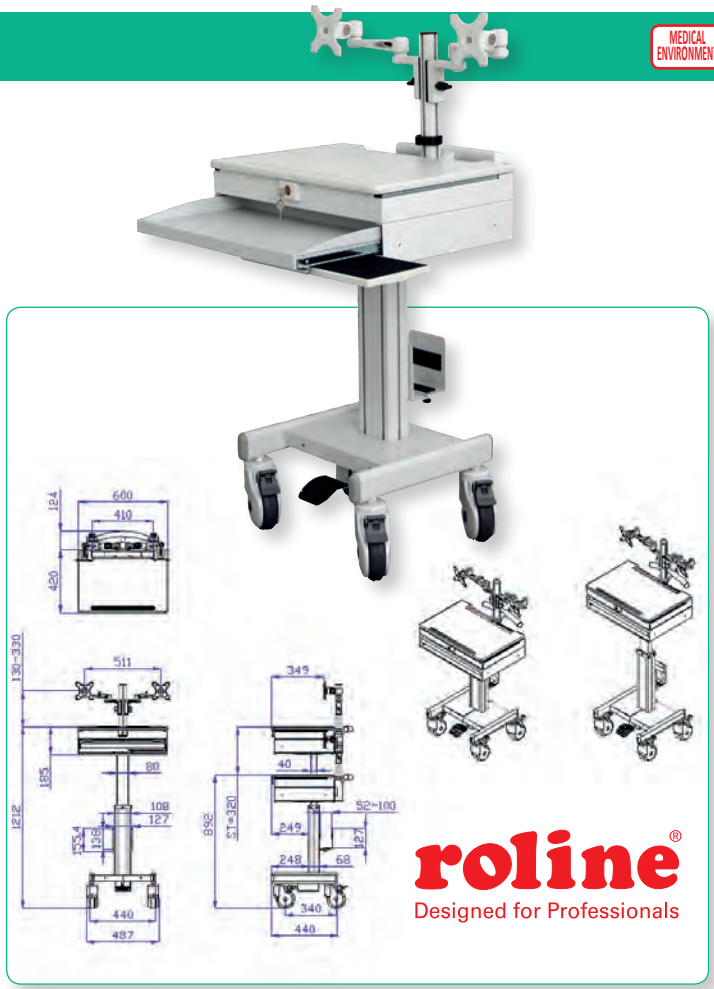

roline®
Designed for Professionals

	Order-No. – P.U.
ROLINE LCD TV + PC Mobile Computing Workstation	17.03.1175 – 1

VALUE Under Desk /Wall Mount Mini/Midi PC Holder

- Space-saving PC holder, creates more space on your work table
- Stable steel construction
- Fastening under the table top (min. 15mm), screws not included in delivery
- Table (under desk) and wall mounting
- Load capacity: 10 kg
- Height adjustable: 300- 533 mm
- Width adjustable: 88- 203 mm



	Order-No. – P.U.
VALUE Under Desk /Wall Mount Mini/Midi PC Holder	17.99.1501 – 6

VALUE Heavy Duty PC Holder, Extendable, Rotable

- Under desk PC Holder telescopic and swiveling
- Stable steel construction
- To be fixed under your desk
- Heavy-Duty CPU Holder (up to 30 kg)
- Locking rotary knob ensures a secure position at any width setting
- Spring pin for easy height adjustment (357 / 457 / 507 / 557 mm)
- 360° swivel allows for easy access of PC backside ports and cables
- Sliding mechanism for greater accessibility

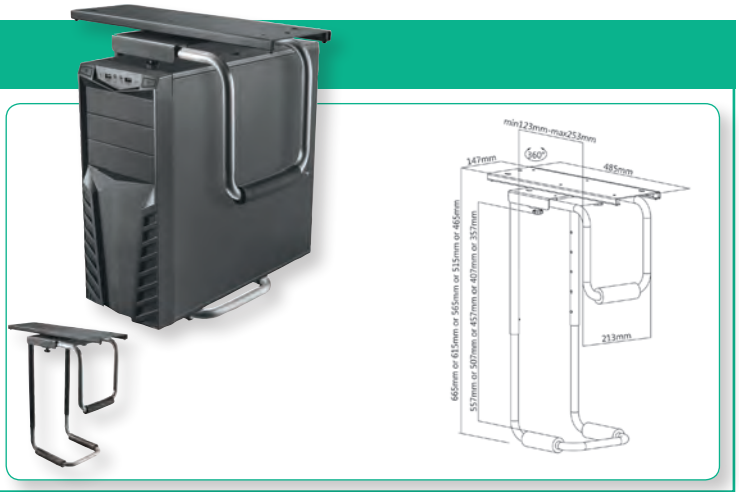

	Order-No. – P.U.
VALUE Heavy Duty PC Holder, Extendable, Rotable	17.99.1502 – 4

VALUE Mini PC Holder

- Space-saving Mini PC holder which offers more room at your desk
- For Mini PCs
- Stable steel construction
- To be fixed under your table board (screws not included)
- Hight and width of holder is adjustable



	Order-No. – P.U.
VALUE Mini PC Holder, black	17.99.1140 – 8

ROLINE Mini PC Holder, Lockable

- Space-saving Mini PC holder which offers more room at your desk
- For Mini PCs
- Stable steel construction
- To be fixed under your table board (screws not included)
- Hight and width of holder is adjustable
- Lockable with key



	Order-No. – P.U.
ROLINE Mini PC Holder, lockable, silver	17.03.1145 – 8
ROLINE Mini PC Holder, lockable, black	17.03.1156 – 8

ROLINE PC Holders

- Under desk PC holder
- Stable steel construction, telescopic (not 17.03.1127/28)
- To be fixed under your table board (min. 15 mm), screws not included
- Height and width adjustable
- Rotation up to 90° (17.03.1129/30) resp. up to 180° (17.03.1131/36/37/85)

Technical data:	17.03.1127/28	17.03.1129/30	17.03.1136/37	17.03.1185	17.03.1131
Max. weight:	30 kg	30 kg	20 kg	10 kg	10 kg
Height adj.:	390-540 mm	390-540 mm	-500 mm	390-540 mm	390-540 mm
Width adj.:	134-234 mm	134-234 mm	50-240 mm	70-134 mm	50-100 mm
Pull out:	no	150 mm	140 mm	yes	yes
Rotation:	no	90°	180°	180°	180°









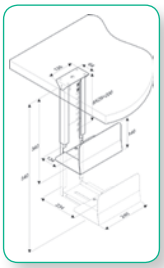



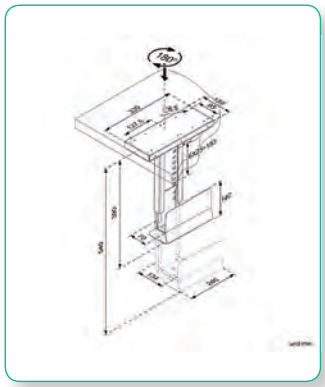

		Order-No.	P.U.
ROLINE PC Holder, black	A	17.03.1127	2
ROLINE PC Holder, silver	A	17.03.1128	2
ROLINE PC Holder with rotation function, black	B	17.03.1129	2
ROLINE PC Holder with rotation function, silver	B	17.03.1130	2
ROLINE PC Holder, extensible, rotatable, black	C	17.03.1136	4
ROLINE PC Holder, extensible, rotatable, silver	C	17.03.1137	4
ROLINE PC Holder, extendable, with rotation function	D	17.03.1185	2
ROLINE Mini PC Holder, extendable, with rotation function, black	E	17.03.1131	4

roline® Designed for Professionals

VALUE Mobile PC Stand

- Creates more space on your desk, due to it being under the table
- Stable metal construction with high tilt-stability
- Adjustable from 119- 209 mm PC width
- More flexible in use
- 2 locking heavy-duty casters







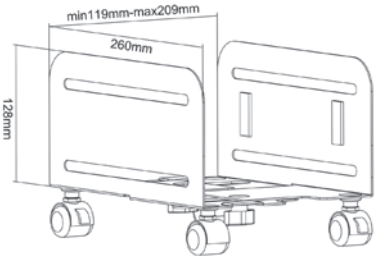

	Order-No.	P.U.
VALUE Mobile PC Stand, black	17.99.1500	6

Mobile PC Stand

- Creates more space on your desk, due to it being under the table
- Stable metal construction with high tilt-stability
- Adjustable from 140-250 mm PC width
- Fitted with rubber mats against slipping and scratching
- More flexible in use



	Order-No.	P.U.
Mobile PC Stand	17.05.1516	5

ROLINE Underdesk Mount for KVM/NUC/Mini PC / Thin Clients

Save space by mounting your thin client under your desk!
- Heavy-duty steel construction
- Suitable for a lot of types of thin clients and small cpus
- Under-Desk Installation: it saves valuable desk space and also keeps cpu free from dust
- Maximum weight should not exceed 10 kg
- Can be fixed under your desktop using the supplied fixings screws
- Allows full access to power button, output jacks, and cables.
- Content: 4x mounting screws, installation instructions

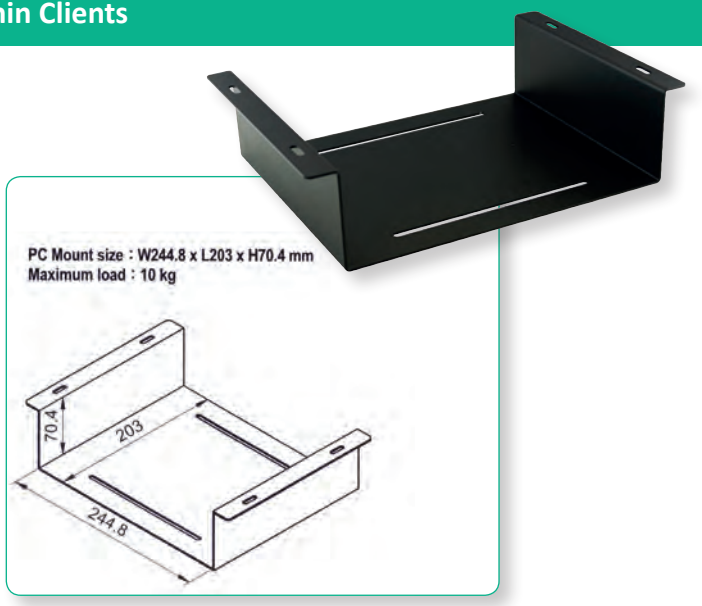

roline® Designed for Professionals

	Order-No. – P.U.
ROLINE Underdesk Mount for KVM/NUC/Mini PC / Thin Clients	17.03.0113 – 5

VALUE Cable Cover Organizer (Under Desk Mount)

For clean cable routing under the desk
- Desktop cable tray organizer
- Simple design: hides wire and power cords for a clean workspace
- Manage all cables: enough room for power stripes, network, and computer cabling
- Easy installation
- Dimensions: 600 x 114 x 76 mm
- Contents:

1x cable manager à 600 x 114 x 76 mm

Value®

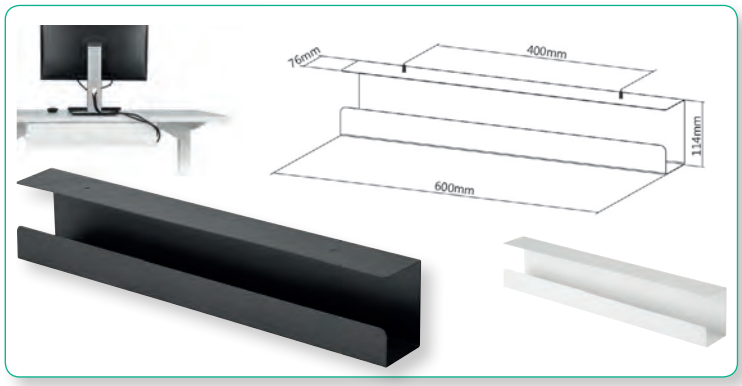

	Order-No. – P.U.
VALUE Cable Cover Organizer (Under Desk Mount), black	17.99.1315 – 6
VALUE Cable Cover Organizer (Under Desk Mount), white	17.99.1316 – 6

ROLINE Cable Cover Organizer (Under Desk Mount)

- Contents: 2x cable manager à 530 x 110 x 80 mm

roline® Designed for Professionals



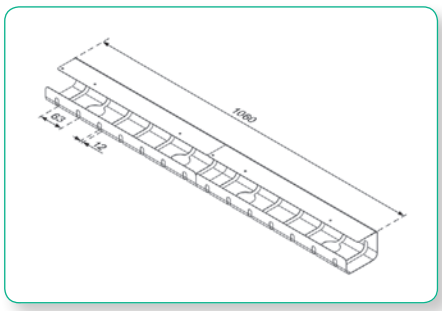





	Order-No. – P.U.
ROLINE Cable Cover Organizer, Under Desk Mount (2 pieces), silver	17.03.1302 – 6
ROLINE Cable Cover Organizer, Under Desk Mount (2 pieces), black	17.03.1303 – 6
ROLINE Cable Cover Organizer, Under Desk Mount (2 pieces), white	17.03.1304 – 6

VALUE Ceiling Projector Mount, small

- Ceiling mount for LCD projector
- Universal spider mount style fits most projectors
- With tilt and swivel function
- Weigth capacity: 25 kg
- Max. projector size in diameter: 500 mm
- Distance to ceiling: 135 mm
- Colour: white
- Content: Ceiling mount, mounting material

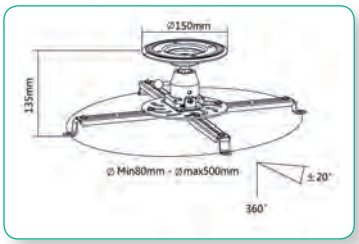



	Order-No. – P.U.
VALUE Ceiling Projector Mount, small	17.99.1100 – 5

VALUE Ceiling Projector Mount, big

Ceiling mount for LCD projector
- Universal spider mount style fits most projectors
- With tilt and swivel function
- Weigth capacity: 11.5 kg
- Max. projector size in diameter: 390 mm
- Adjustable ceiling tube can be exteded from 37.5 cm to 47.5 cm off the ceiling
- Cables can go through the tube
- Colour: Grey
- Remark: Product similar to picture. Colour: Grey!
- Content: Ceiling mount, mounting material

Technical data:	17.99.1102
Fixing:	ceiling mount
Load capacity:	up to 11.5 kg
Distance to ceiling:	375 - 475 mm, adjustable
Weight:	2.5 kg
Max. projector size diameter:	390 mm
Colour:	grey



	Order-No. – P.U.
VALUE Ceiling Projector Mount, big	17.99.1102 – 6

LCD/CRT Monitor Stand Trend

- Holds up to 51 cm (20“) LCD or CRT monitor
- Create extra storage (ca. 500 x 60 mm) for your keyboard or documents and office stationery under the platform
- Enlarged utility space on the platform to accommodate your speakers or media storage box next to a monitor
- Additional tube support avoids monitor to lean backwards
- Special handle design on side panels for easy movement of the stand
- Max. loading: 20 kg
- Dimensions of stand (LxWxH): 580 x 335 x 70 mm
- Colour: Black/grey





	Order-No. – P.U.
LCD/CRT Monitor Stand Trend, black	17.02.3370 – 2

Dual Monitor/Printer Stand Trend

- Top wood platform supports A4 laser/ inkjet printers
- Double drawers to storage provides multi storage of documents (A4, letters sized papers) and office stationery
- Special concave design provides more conveniences of picking up the thin pile of documents
- Special handle design on side panels for easy movement of the stand
- Platform size (LxW): 450 x 350 mm
- Colour: Black/grey





	Order-No. – P.U.
Dual Monitor/Printer Stand Trend, black	17.02.3375 – 2

LCD Monitor Stand, Acryl

- Stable Mesh monitor stand made of steel
- Holds up LCD monitors
- Provides storage place for pencils, stocks and much more
- Platform size: 420 x 280 mm
- Temporary storage of the keyboard (470 x 280 mm) and for documents or under the monitor platform
- Two side compartments
- Non-slip feet
- Max. loading: 15 kg
- Height 145 mm
- Pull-out drawer (W x H x D): 300 x 230 x 70 mm
- Dimensions of stand (W x H x D): 505 x 300 x 145 mm
- Colour: black





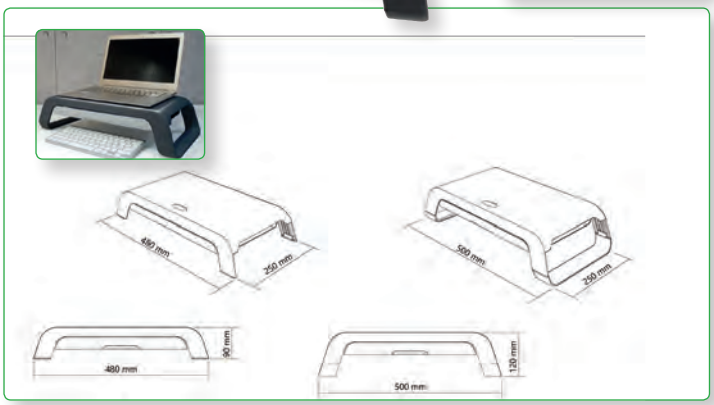

roline®
Designed for Professionals

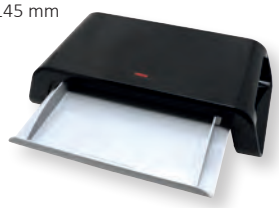

	Order-No. – P.U.
LCD Monitor Stand, Acryl, black	17.02.3374 – 6

LCD Monitor Stand Adjustable Tempered Glass Surface Risers (Square)

- Compact design with smooth edges all around
- Increased storage room beneath the desktop
- Create extra storage (ca. 500 x 210 mm) for your keyboard or documents and office stationery under the platform
- Stepless height settings for your free height adjustment (75- 85 mm)
- Max. loading: 20 kg
- Dimensions of stand (LxWxH): 580 x 210 x 75- 85 mm

Suggested Screen Size:
up to 81cm (13“-32“)

Max. Load: 20 kg
Adjustable Height:
75mm - 85mm
Glass Thickness: 5mm
Material:
Glass, Stainless Steel
Dimensions:
580 x 210 x 85mm





	Order-No. – P.U.
LCD Monitor Stand Adjust. Tempered Glass Surface Risers (Square)	17.02.3376 – 6

VALUE Height-adjustable Monitor/Laptop Stand

Monitor/laptop stand made of wood, 2-step height adjustment and with cable suspension for a clean, tidy workplace

- Large platform footprint (600 / 900 x250mm) for up to two monitors or laptop and devices such as speakers or pen holders
- Cable suspension on the rear for space-saving and tidy cable management
- Under the monitor platform there is plenty of space for documents or also for temporary storage of the keyboard
- Loadable up to 20kg
- Dimensions (WxHxD): 600 / 900 x 90/115 x 250mm
- Colour: black









Value®

	Order-No. – P.U.
VALUE Height-adjustable Monitor/Laptop Stand, black	17.99.1340 – 6
VALUE Height-adjustable Monitor/Laptop Stand, black, extra-large	17.99.1341 – 6

ROLINE Mini Printer Table, Height Adjustable

NEW

Printer table or laptop shelf as an attachment for the desk - versatile and ergonomic to work with a laptop when standing or as a shelf for smaller printers, copiers and scanners. For more efficient working in the office!

- Perfectly suited in the office or home office as a desk attachment for smaller printers, copiers and scanners or similar devices
- Also perfect as a laptop shelf to work ergonomically while standing
- Easy to adjust in height by two levers
- Sturdy metal frame
- Printer level (W×D: 50×29cm)
- Load capacity: up to 10kg
- Color:
  - Frame: light grey
  - Plate: white
- Dimensions (H×W×D): min/max. 39/49×50×30cm
- Weight: 5kg

roline®
Designed for Professionals

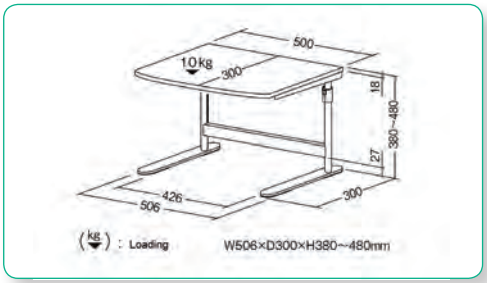



	Order-No. – P.U.
ROLINE Mini Printer Table, height adjustable, grey	17.01.1086 – 1

VALUE Anti-fatigue Floor Mat

%

Standing for long periods on hard surfaces can put excessive strain on the body (musculoskeletal system - feet, ankles, knees, hips and lower back) and cause not only considerable pain but also muscle and joint fatigue.
Relieve your discomfort caused by standing for long periods of time with this anti-fatigue mat.

- Reduces fatigue at the workplace!
- Standing on the mat distributes the pressure of your body weight more evenly over the entire foot.
- Effectively relieves pressure on knees, feet and sensitive joints
- Durable PU foam- supports the distribution of foot pressure
- Thanks to bevelled edges- you can avoid tripping or crimping of the mat
- Non-slip rubber underside surface prevents shifting on different surfaces
- Water- and dirt-repellent surface
- Cleaning- simply wipe off with a damp cloth
- Dimensions (L x W x H): 51 x 81 x 1,9 cm
- Color: black

Value®





	Order-No. – P.U.
VALUE Anti-fatigue Floor Mat, black	17.99.1176 – 5

VALUE Single Monitor Arm Sit-Stand Workstation Compatible

Stationary monitor arm sit-stand workstation compatible (as an attachment for 17.03.1177/17.99.1177) or generally for mounting a monitor on the desk with the smallest space requirement!

- Single Monitor Arm for Sit-Stand Workstation, compatible for 17.03.1177 and 17.99.1177
- Sleek design blends into various modern interior designs
- Easy-grip knobs for quick tilt and lock
- Cable management
- Provides extra height adjustment range for flat surface sit-stand workstations
- Mounting possibilities: desk clamp mounting
- Max. load capacity: 8kg

Value®



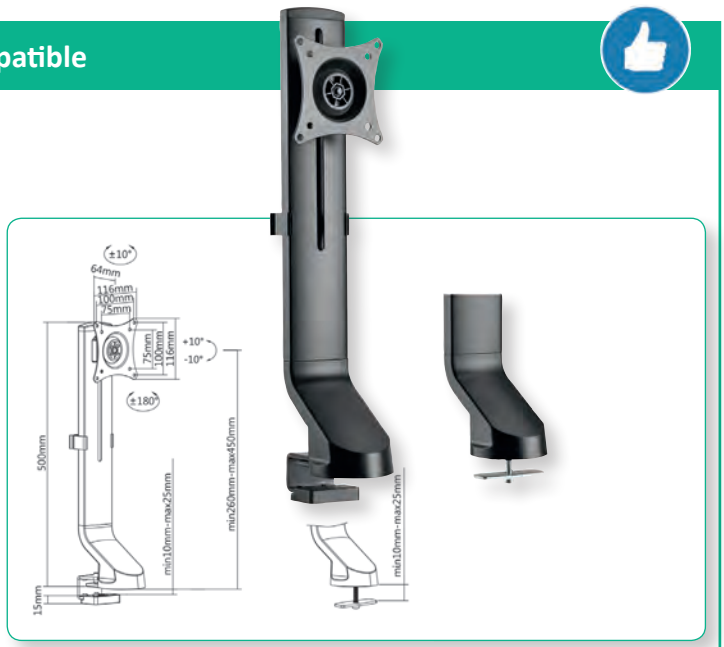

	Order-No. – P.U.
VALUE Single Monitor Arm Sit-Stand Workstation Compatible, 3 Joints	17.99.1179 – 4

VALUE Adjustable Desktop Workstation, Sit - Stand Up

NEW

Turn your office table into an ergonomic, comfortable workspace within seconds. Enables you to switch between sitting and standing (orthopedic and occupational medicine recommended), thus increasing your own health and well-being.

- Steplessly height-adjustable (minimum 105 mm- max 500 mm), thus you can customize your workplace according to your own needs
- Double-sided gas spring lifting mechanism- for easy and effortless height adjustment of the workstation
- With a durable working surface of 800 x 400 mm, this workstation provides enough space for up to two monitors (when a monitor arm is used)
- Ergonomic keyboard / mouse shelf (660 x 260 mm) / max. charge 2 kg
- Maximum depth of 580 mm
- Plate thickness 12 mm
- Maximum load: up to 15 kg
- Rounded corners and edges
- Robust construction
- Color: Black
- Delivery is carton-packed, requires self-assembly only for the keyboard/mouse tray



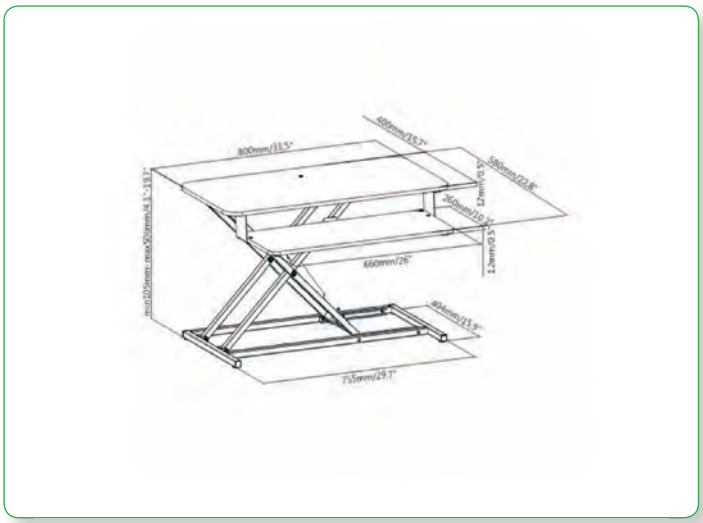





	Order-No.	– P.U.
VALUE Adjustable Desktop Workstation, Sit - Stand Up, black	17.99.1178	– 1

ROLINE PC Standing Workstation

- Stable metal/plastic frame
- Load bearing capacity: up to 40 kg
- Top shelf (WxD: 68 x 50 cm) for monitor etc.
- Slide-out keyboard shelf (WxD: 53.5 x 35 cm) with mouse surface (28 x 23 cm)
- Slide-out shelf (WxD: 53.5 x 35 cm) which can be used for printers
- Floor level shelf (WxD: 57.9 x 31.5 cm)
- Up to 40kg load bearing capacity
- Mobile via 4 wheels, 2 of which can be locked
- Colour:
  frame: light grey
  surface: white
  surface border: grey
- Dimensions (HxWxD): 110 x 68 x 54 cm

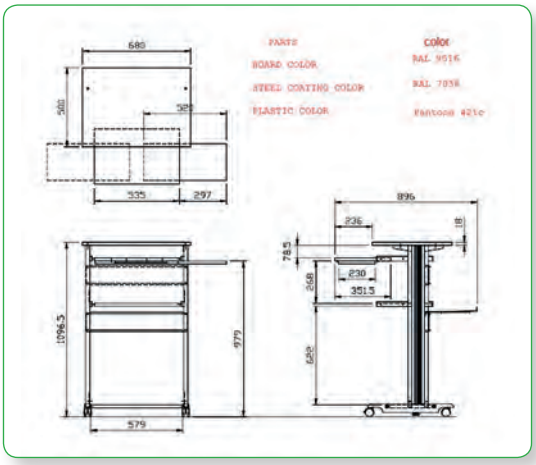



	Order-No.	– P.U.
ROLINE PC Standing Workstation	17.02.1545	– 1

ROLINE PC Standing Workstation

Work healthier! A change from sit to stand is good for your spine. With our height adjustable ROLINE PC-Stand-Workplace you can do your work standing.

- Stable metal/plastic frame
- Load bearing capacity: up to 60 kg
- Top shelf (W x D: 70 x 35.5 cm) for monitor etc.
- Keyboard and mouse shelf (W x D: 70 x 40 cm)
- Printer shelf (W x D: 47.2 x 23 cm)
- Floor level shelf (W x D: 45.5 x 35 cm)
- Mobile via 4 wheels, 2 of which can be locked
- Colour:
  frame: light grey / surface: black / surface border: black
- Dimensions (H x W x D): min. 81 / max. 125 (+12,8 cm) x 70 x 70,5 cm
- Table top thickness 15mm (Melamine)

The furniture is height adjustable just as you need it and helps to create an ergonomic, healthy workplace by allowing users to sit or stand throughout the day.



roline®
Designed for Professionals

	Order-No. – P.U.
ROLINE PC Standing Workstation, black / gray	17.02.1547 – 1

ROLINE Printer Tables

17.01.1085
- Stable metal frame
- Printer shelf and floor level shelf (WxD: 46x39 cm)
- Mobile through 4 wheels, 2 of them are lockable
- Load bearing capacity: up to 30kg
- Colour:
  frame: light grey
  surface: white
  surface border: white
- Dimensions (HxWxD): 38x51x44 cm

17.01.1087
- Stable metal / man-made material frame
- Printer shelf (WxD: 68x50 cm)
- Middle shelf (WxD: 58.5x44 cm)
- Floor level shelf (WxD: 57.5x31.5 cm)
- Mobile through 4 castors, 2 of which are lockable
- Level screws hinders the printer table from tilting on it's side
- Load bearing capacity: up to 30 kg
- Colour:
  frame: light grey
  surface: white
  surface border: grey
- Dimensions: 77.5x68x54 cm

roline®
Designed for Professionals





A

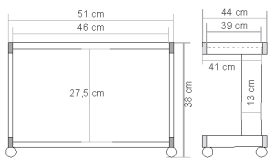

B

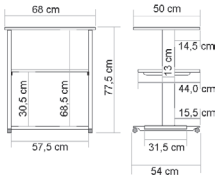

		Order-No. – P.U.
ROLINE Mini Printer Table	A	17.01.1085 – 1
ROLINE Printer Table	B	17.01.1087 – 1

ROLINE Printer Table, up to 80 kg

- Stable metal / plastic frame
- Load bearing capacity: up to 80 kg
- Printer shelf (WxD: 68x50 cm)
- Middle shelf (WxD: 59x44 cm)
- Floor level shelf (WxD: 59x31.5 cm)
- Level screws prevent the printer table from tilting on its side
- Colour:
  frame: light grey
  surface: white
  surface border: grey
- Dimensions (WxHxD): 74x68x55 cm

roline®
Designed for Professionals



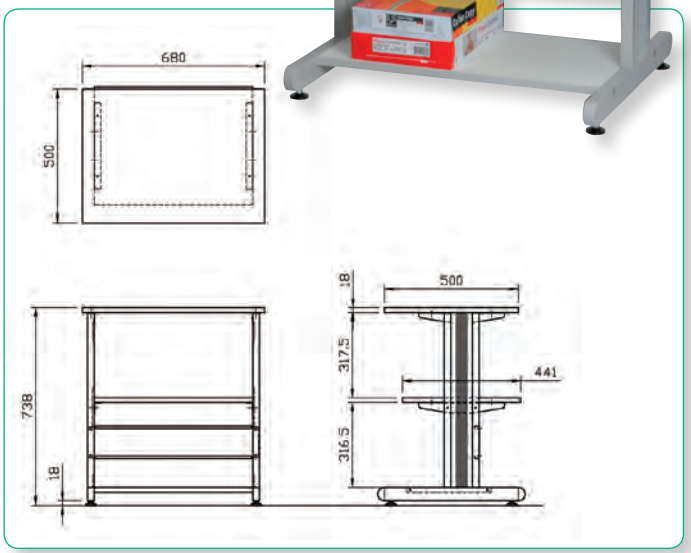

	Order-No. – P.U.
ROLINE Printer Table, up to 80 kg	17.01.1089 – 1

ROLINE Cleaning Products

19.03.3000
- Cleaning foam
- Ideal for cleaning printers, monitors, computer cases etc.
- No electrical conduction, antistatic, completely bio-degradable
- Contents: Spray bottle

19.03.3100
- 100 cleaning tissues for all plastic and metal surfaces
- Ideal for cleaning printers, monitors, PC cases etc (not for TFT Displays and PDAs)
- Antistatic tissues, complete bio-degradable
- Hygienic and fresh smell
- Contents: 100 Cleaning-Tissues

19.03.3110
- For blowing dust and debris from inaccessible areas of electronic equipment (computer keyboards, printers, CD-ROM drives, copiers, fax machines, etc.
- Variable spray intensity
- Ecologically friendly
- 400 ml aerosol can with spray tube included
- Contents: Aerosol-Can

19.03.3130
- 400ml Cleaning foam
- Ideal for cleaning plastic and coloured surfaces such as tables
- Antistatic, non-abrasive
- Contents: Spray bottle

19.03.3135 / 19.03.3160
Eco-friendly special cleaner for TFT and Laptop monitors, LCDs, PDAs, monitor filters, surfpads and all coated and uncoated glass surfaces (e.g. mirrors, overhead projectors and lenses).
- 250ml pump-spray bottle
- No alcohol (not flammable), completely bio-degradable
- Contents: Pump-spray bottle



19.03.3110



19.03.3130

19.03.3185
- 100 moist disinfectant cleaning cloths
- For all plastic and metal surfaces (printer, keyboard, CPU, phone, fax (not for TFT screens) ets.)
- For a healthier office environment
- Fast drying, for a streak free shine

- Contents: Tub with 100 pcs.

Note: Use biocides safely. Always read the label and product information before use.

19.03.3140
- This set offers you a complete solution for cleaning your complete office-workplace
- Contents: 1x 125ml ROLINE TFT-Cleaner, 1x keyboard sponge and swab, 1x all-round-sponge and 4x tissues „dry“

roline®
Designed for Professionals



19.03.3000



19.03.3100



19.03.3185



19.03.3135



19.03.3140

	Order-No. – P.U.
ROLINE Allround-Cleaner-Aerosol, 500 ml	19.03.3000 – 1
ROLINE Monitor- and Plastic-Cleaner	19.03.3125 – 1
ROLINE Universal-Cleaning-Tissues	19.03.3100 – 1
ROLINE Aerosol Can Air Duster, 400 ml	19.03.3110 – 1
ROLINE Antistatic Foam-Cleaner, 400 ml	19.03.3130 – 1
ROLINE TFT Cleaner	19.03.3135 – 1
ROLINE TFT Cleaner with microfiber cloth	19.03.3160 – 1
ROLINE Disinfectant Computer Cleaning Wipes	19.03.3185 – 1
ROLINE PC-Cleaning Set	19.03.3140 – 1



TV Holders / Furnitures

10

TV Wall Holders . . . . . 10.02 – 10.06
Digital Signage . . . . . 10.06 – 10.07
TV Mobile Cart . . . . . 10.08 – 10.10
TV Ceiling Holders 10.11
Monitor /TV Board/Stand 10.11
Wall Cable Cover 10.12
Cable Box 10.12
Floor Cable Cover 10.12

VALUE LCD/Plasma TV Wall Holder, Low Profile

This wall mount allows a very discreet installation of a LCD/Plasma TV, perfect for e.g. a wooden wall.
- Weight capacity: up to 35 kg
- Screen Size: 81 cm up to 139 cm
- Low profile- very small distance to wall 19mm
- Material: Steel
- Max. VESA 400 x 400 mm



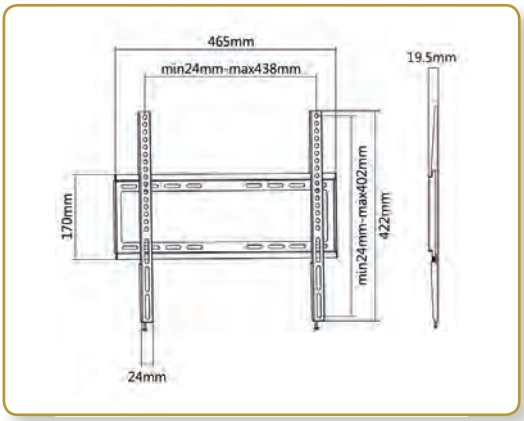

	Order-No. – P.U.
VALUE LCD/Plasma TV Wall Holder, Low Profile, black	17.99.1202 – 12

VALUE LCD/Plasma TV Wall Holder, Low Profile

This wall mount allows a very discreet installation of a LCD/Plasma TV, perfect for e.g. a wooden wall.
- Weight capacity: up to 80 kg
- Screen Size: 81 cm up to 152 cm
- Low profile - very small distance to wall
- Material: Steel
- Max. VESA 700 x 500 mm

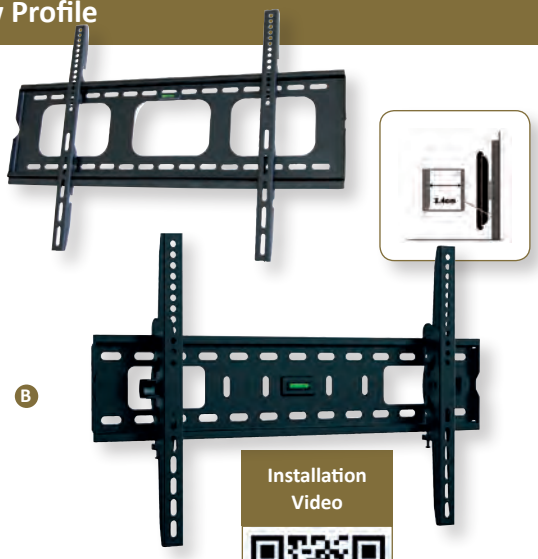

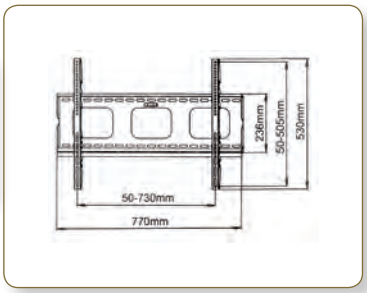

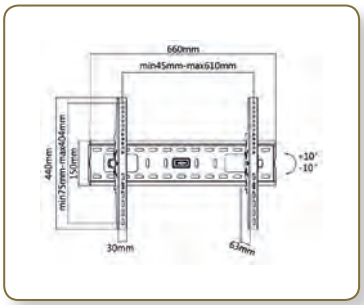

Technical data:	17.99.1214	17.99.1218
Fixing:	wall mount	wall mount
Load capacity:	up to 80 kg	up to 75 kg
Screen size:	81 cm up to 152 cm	93 cm up to 177 cm
Distance monitor to wall:	2.4 cm	8 cm
Tiltable up or down:	-	10°

Installation Video

		Order-No. – P.U.
VALUE LCD/Plasma TV Wall Holder, Low Profile	A	17.99.1214 – 5
VALUE LCD/Plasma TV Wall Holder, Tiltable	B	17.99.1218 – 4

VALUE TV Wall Mounts, < 40kg

Stable and fixed TV wall mount with just 27mm wall distance - the load capacity is up to 40kg and the mount supports maximum VESA 400x400.
- For screens from 32“ to 55“ (max. VESA 400x400)
- Load capacity up to 40kg
- Fixed suspension
- Very small wall distance of 27mm
- Securing against unintentional loosening of the mounting hooks
- Integrated spirit level



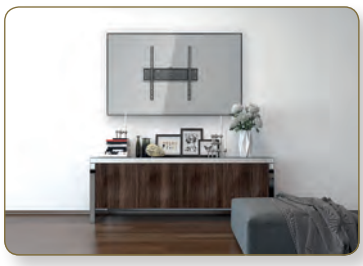

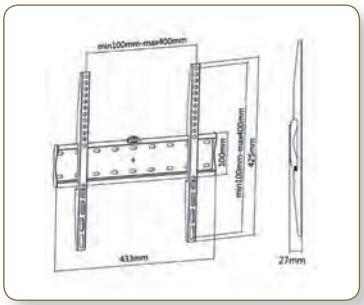

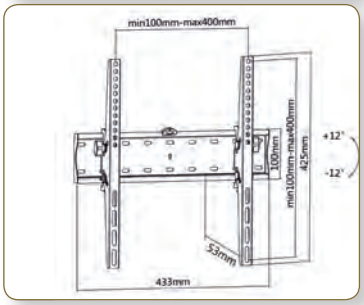

	Order-No. – P.U.
VALUE TV Wall Mount, 27mm Wall distance, 40kg load capacity,	17.99.1213 – 10
VALUE TV Wall Mount, 27mm Wall distance, 40kg load capacity, tiltable	17.99.1219 – 10

VALUE LCD/TV Wall Mount

- Mounts a monitor onto a wall
- Integrated cable management system
- Built-in level adjustment
- Swiveling arm offer maximum viewing flexibility (+90° –-90°)
- Freely tilting allows easy TV angle adjustment (+5° – 15°)
- Load capacity: up to 35 kg
- Meets VESA 400 x 400 mm
- Arm length: 61 cm
- Contents: supporting arm

Technical data: 17.99.1144
Fixing: wall mount
Load capacity: up to 35 kg
Joints: 4
Arm length: 61 cm



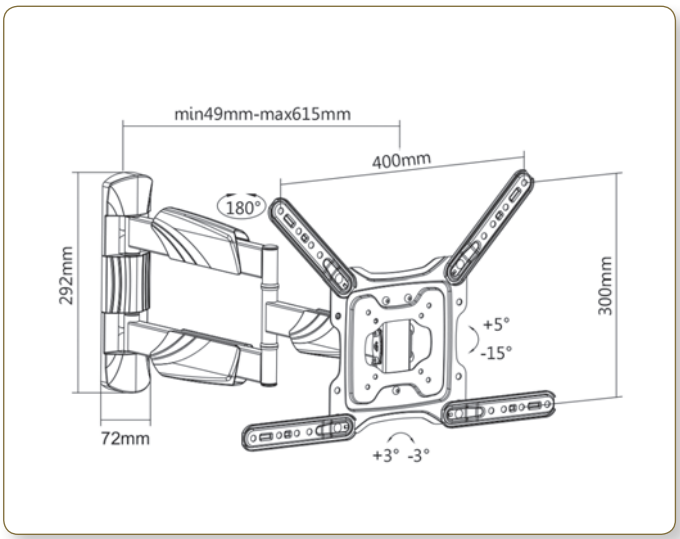

	Order-No. – P.U.
VALUE LCD/TV Wall Mount, 4 Joints	17.99.1144 – 5

VALUE LCD/TV Wall Mount

- Arm length: up to 425 mm
- Max. load: 25 kg
- Mounts your screen to the wall and monitor can be tilted ,swiveded and rotated
- Meets VESA 75 x 75 mm,
  100 x 100 mm, 100 x 200 mm,
  200 x 200 mm
- Colour: black
- Contents: supporting arm

Technical data: 17.99.1143
Fixing: wall mount
Load capacity: up to 25 kg
Joints: 5
Arm length: up to 40 cm

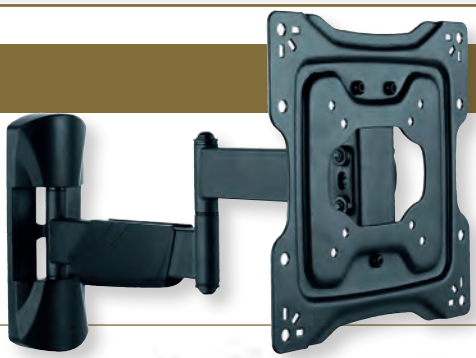

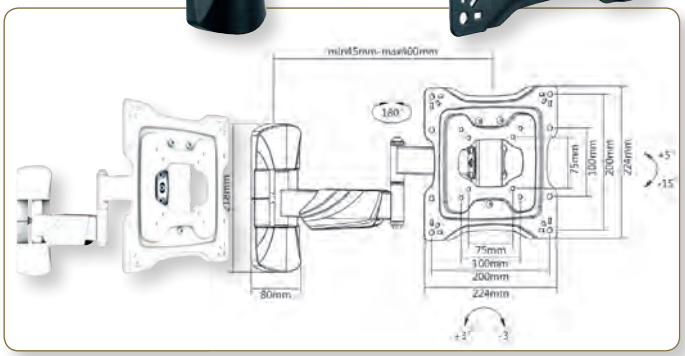

	Order-No. – P.U.
VALUE LCD/TV Wall Mount, black, 5 Joints	17.99.1143 – 5
VALUE LCD/TV Wall Mount, white, 5 Joints	17.99.1148 – 5

ROLINE LCD/TV Wall Mount

- Arm length: up to 425 mm
- Max. load: 25 kg
- Mounts your screen to the wall and monitor can be tilted ,swiveded and rotated
- Meets VESA 75 x 75 mm, VESA 100 x 100 mm, VESA 100 x 200 mm,
  VESA 200 x 200 mm
- Colour: black
- Contents: supporting arm, mounting screws, 6 mm hex wrench, manual, cable clips

Technical data: 17.03.1169
Fixing: wall mount
Load capacity: up to 25 kg
Joints: 5
Arm length: 42 cm



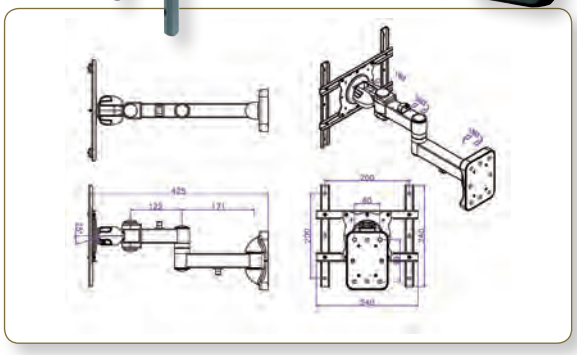

	Order-No. – P.U.
ROLINE LCD/TV Wall Mount, 5 Joints	17.03.1169 – 6

VALUE LCD/Plasma TV Wall Holder, Low Profile, for Samsung Q-Series™ (Q7™ / Q8™ / Q9™)

This wall mount allows a very discreet installation of a LCD/Plasma TV, perfect for e.g. a wooden wall.

- Weight capacity: up to 50 kg
- Screen Size: up to 165.1 cm
- Low profile- very small distance to wall, 17- 92 mm
- Integrated bubble level assures alignment and provides installation instructions
- Innovative quick-release mechanism allows for a quick and easy installation

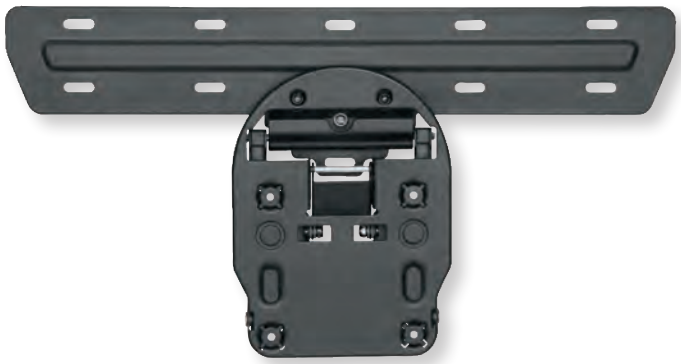







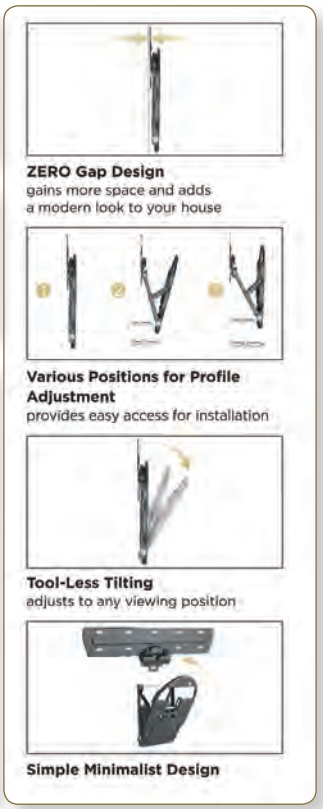

	Order-No.	P.U.
VALUE LCD/Plasma TV Wall Holder, Low Profile, for Samsung Q™ Series (Q7™ / Q8™ / Q9™)	17.99.1166	5

VALUE LCD/Plasma TV Wall Holder, Low Profile, Samsung® Q-Series™ (Q7™ / Q8™ / Q9™ / Q7FN™ / Q9FN™)

TV Wall mount for Samsung® Q-Series™ (Q7™ / Q8™ / Q9™ / Q7FN™ / Q9FN™) monitors with minimum space requirements

- For Samsung® Q-Serie™ (Q7™/Q8™/Q9™/Q7FN™/Q9FN™) screens up to 190.5.1cm (75")
- Load capacity up to 50 kg
- Fixed suspension
- Very small wall distance: 17- 92 mm
- Securing against unintentional loosening of the mounting hooks
- tiltability: +3° ~-3°
- Solid black steel bracket

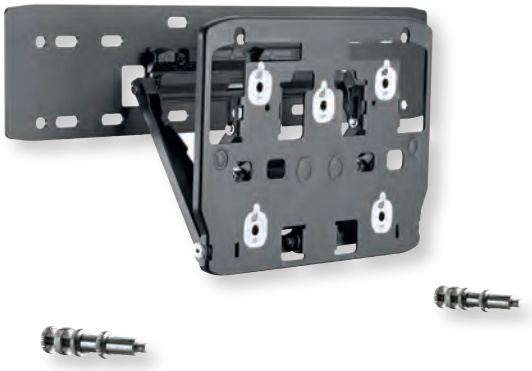

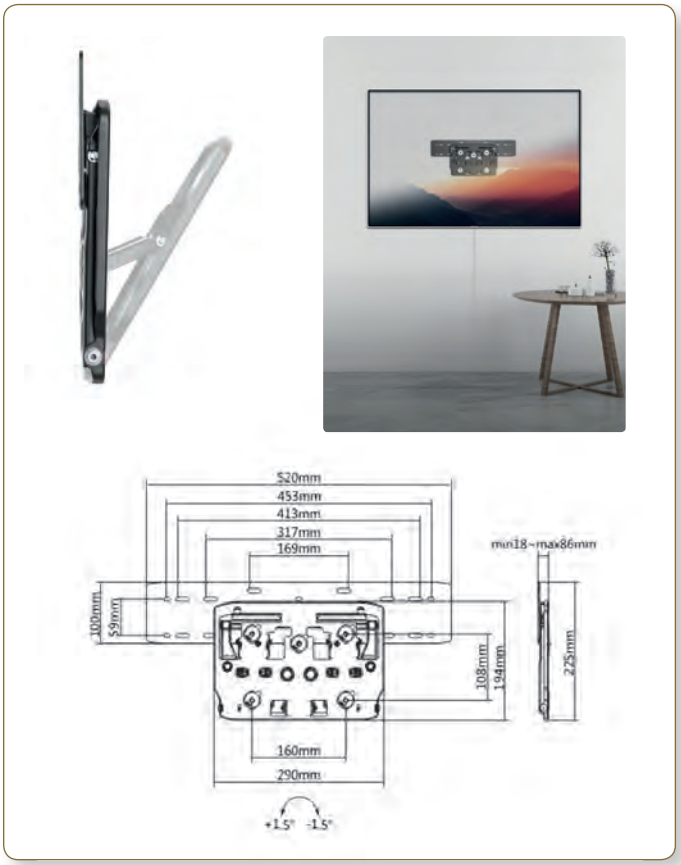

	Order-No.	P.U.
VALUE LCD/Plasma TV Wall Holder, Low Profile, for SAMSUNG Q-Series	17.99.1169	5

VALUE Solid Articulating Wall Mount TV Holder, up to 177.8cm (37“ – 70“)

- Dual-arm full-motion wall mount for TVs (LED, LCD flat panel TVs) up to 177,8cm (37“- 70“)
- Max. weight: 35 kg
- This mount extends out 400mm from wall and allows TVs to turn left or right
- Full motion allows maximum flexibility- tilts and swivel your TV for easy viewing from any seat in a room
- Post-installation level adjustment allows the TV to „roll“ up to 3° clockwise and counterclockwise to ensure it‘s perfect level
- Integrated cable management system keeps cables organized and protected
- Wide wall plate fits for stud installation

Technical Data:
- Material: Steel
- Product weight: 7kg
- Recommended Screen Size: up to 177.8 cm (37“-70“)
- Installation: Solid wall, Double Stud
- Max. Load Capacity: 35 kg
- Max.Hole Pattern: 600 x 400mm
- VESA Standard: 200x200, 400x200, 300x300, 400x300, 400x300, 600x400
- Max.VESA: 600 x 400
- Tilt:-20°
- Level

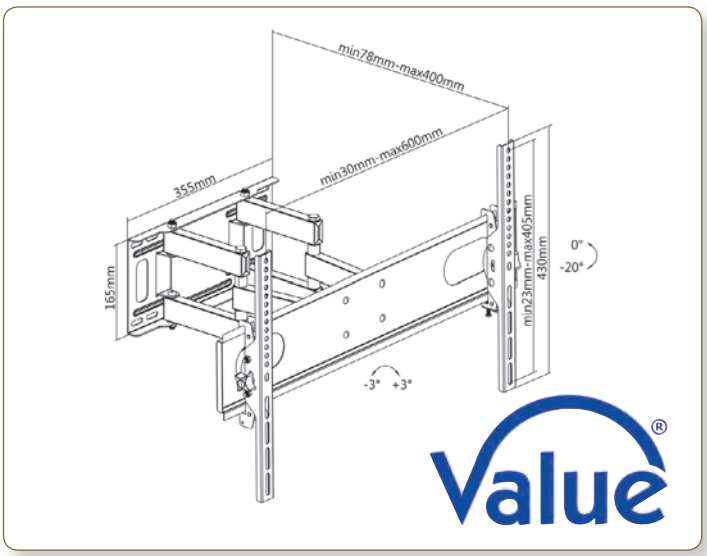



	Order-No. – P.U.
VALUE Solid Articulating Wall Mount TV Holder, up to 177.8cm (37“ – 70“)	17.99.1208 – 3

VALUE Solid Articulating Wall Mount TV Holder, up to 177.8cm (37“ – 70“)

- Dual-arm full-motion wall mount for TVs (LED, LCD flat panel TVs) up to 177,8cm (37“- 70“)
- Max. weight: 50kg
- This mount extends out 510mm from wall and allows TVs to turn 60° left or right
- Full motion allows maximum flexibility- tilts and swivel your TV for easy viewing from any seat in a room
- Post-installation level adjustment allows the TV to „roll“ up to 3° clockwise and counterclockwise to ensure it‘s perfect level
- Integrated cable management system keeps cables organized and protected
- Wide wall plate fits for 406/450mm stud installation

Technical Data:

- Material: Steel	
- Product weight:	7 kg
- Recommended Screen Size:	up to 177,8cm (37“-70“)
- Installation:	Solid wall, Double Stud
- Max. Load Capacity:	50kg
- Max.Hole Pattern:	626X400mm
- VESA Standard:	200x200,400x200, 300x300,400x400,600x400
- Max.VESA:	600x400
- Tilt:	-20° ~ +10°
- Swivel:	-60° ~ +60°
- Level Adjustment	-3° ~ +3°

Installation Video

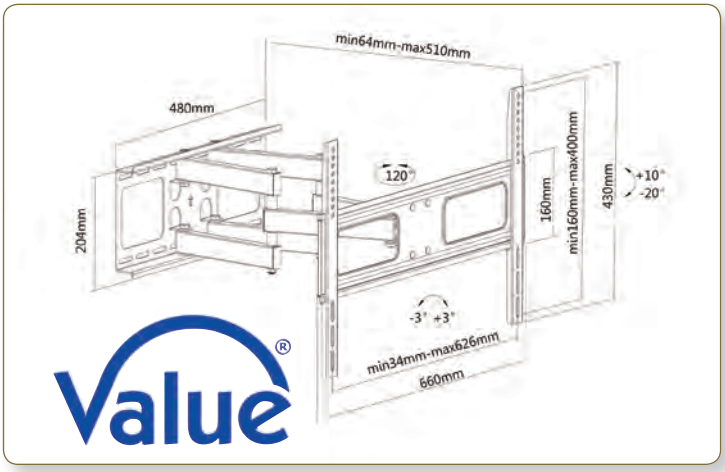

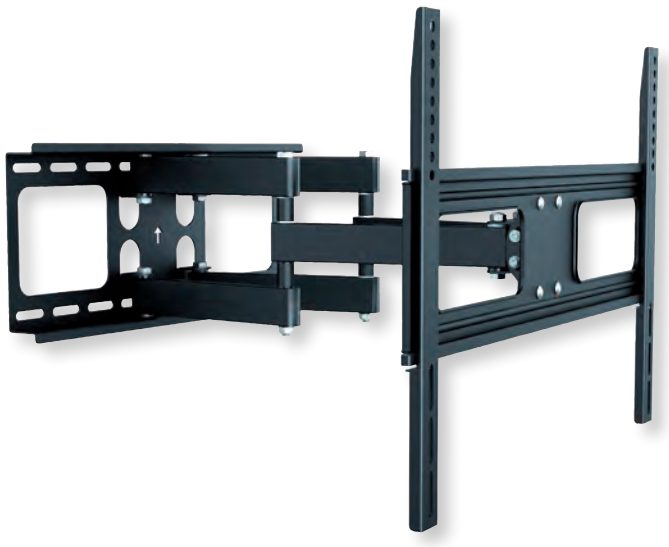

	Order-No. – P.U.
VALUE Solid Articulating Wall Mount TV Holder, up to 177.8cm, black	17.99.1205 – 2

VALUE Solid Articulating Wall Mount TV Holder, up to 228.6cm (50“ – 90“)

- Dual-arm full-motion wall mount for TVs (LED, LCD flat panel TVs) up to 228,6 cm (50‘‘- 90‘‘)
- Max. weight: 75 kg
- This mount extends out 635 mm from wall and allows TVs to turn 60° left or right
- Full motion allows maximum flexibility- tilts and swivel your TV for easy viewing from any seat in a room
- Post-installation level adjustment allows the TV to „roll“ up to 3° clockwise and counterclockwise to ensure it‘s perfect level
- Integrated cable management system keeps cables organized and protected

Technical Data:
- Material: Steel
- Product weight: 12kg
- Recommended Screen Size: 50“- 90“ (127 cm- 228,6 cm)
- Installation: Solid wall, Double Stud
- Max. Load Capacity: 75 kg
- VESA Standard: 200x200, 400x200, 300x300, 400x400, 600x400, 800x400, 800x600
- Max.VESA: 800x600
- Tilt:-15°~+5°
- Swivel:-60°~+60°

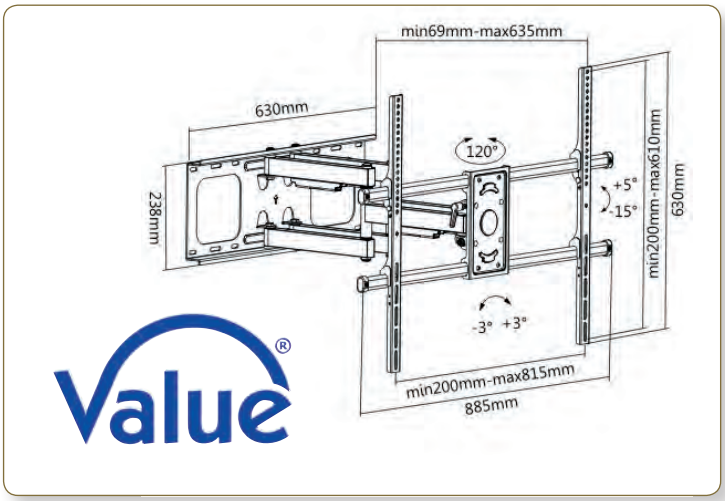



	Order-No.	P.U.
VALUE Solid Articulating Wall Mount TV Holder, up to 75kg	17.99.1207	2

ROLINE Digital Signage Video Wall Solution

MEDICAL ENVIRONMENT

For what types of businesses are these products commonly used?
- Trade Shows & Convention Centers
- Retail Stores- for shoppers to participate in giveaways or learn more about the range of offered products

Highlights:
- Aligning of the the displays very quickly
- Lock screw to set position if desired
- TFT Orientation: Vertical
- Universal mount style fits various sizes of most displays with VESA max.600x400 mm
- Push-out open mount providing easy maintainance access
- Max. Weight load capacity: 50 kg
- **The solution consists of two brackets; so you need as for a small video wall (2x 2 monitors) twice this article**

- Colour: black
- Contents: 2x supports

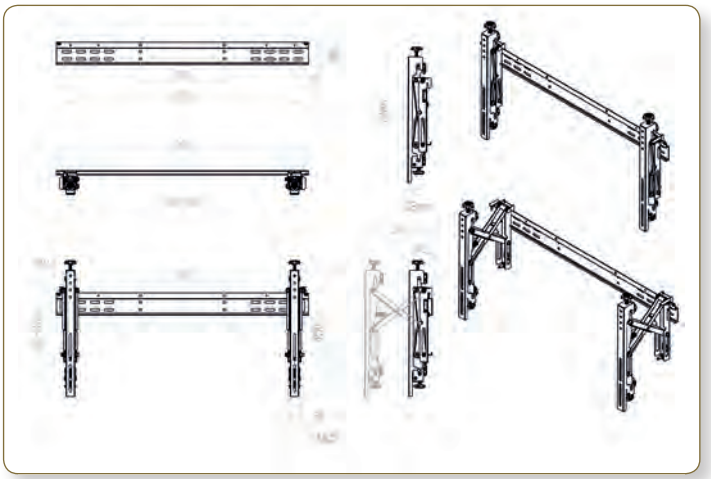





	Order-No.	P.U.
ROLINE Digital Signage Video Wall Solution	17.03.1252	1

ROLINE Digital Signage Stand

- How can an a digital signage stand benefit your business? There are a lot of possibilities, and they can be used across a wide variety of settings including retail stores & trade shows. That enables users to take projects and presentations on the road with ease.
- Digital Signage stands turn a tablet into a versatile workstation or customer information center. Pre-load apps and software for customers to use that is tailored to your business.

For what types of businesses are these products commonly used?
- Hotels- for guests to check in/out or to request room accommodations
- Restaurants & Food Service Locations- reservation of seating or food order
- Trade Shows & Convention Centers
- Retail Stores- for shoppers to participate in giveaways or learn more about the range of offered products
- Car Dealerships- for customers to see individual features on new models, check in for vehicle maintenance services or queue up to meet with a dealer

- Designed with heavy duty extruded alloy
- Lock screw to set position if desired
- TFT Orientation: Vertical or Horizontal
- Suitable for Indoor Use Only
- Universal mount style fits various sizes of most displays with VESA max.100x100 mm (17.03.1250) and max. 100x200 mm (17.03.1251)
- Cables can go through the tube (only 17.03.1250)
- Max. Weight load capacity: 10kgs
- Colour: silver
- Additional advertising area max. 380 x max. 900 mm (height is individually adjustable) only for 17.03.1251

REMARK: Display is NOT included



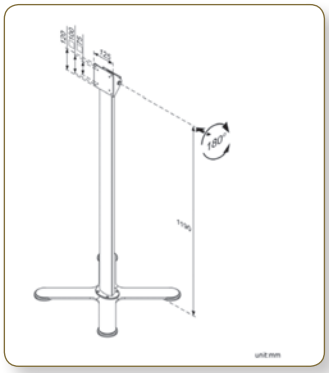



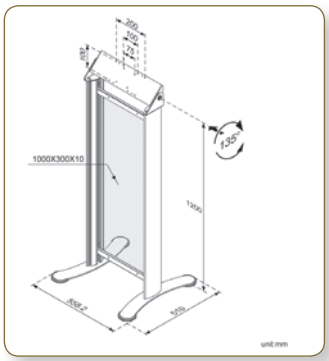

		Order-No.	– P.U.
ROLINE Digital Signage Stand	A	17.03.1250	– 1
ROLINE Digital Signage Stand, Advertising	B	17.03.1251	– 1

VALUE Height Adjustable Multi-Purpose Tripod Stand

This tripod multi-purpose stand is a practical solution that fits for numerous applications. Attached to the top of the quality steel stand is a 90° tiltable VESA plate that holds most any laptop or equipment used to work or for presentations.
You can move from one location to another knowing you'll have the right equipment with you.
- Non-Skid rubber pads: protect the work surface from scratches or scuffs
- Easy-Grip knobs: for quick tilt and lock
- Locking rotary knob: ensures a secure position at any height setting
- Safety ledge stopper: prevents your devices from slipping
- Height Adjustment: satisfies user's different preferences
- Infinitely height-adjustable (min. 1080 mm- max. 1780 mm)
- With a working area of 400 x 300 mm this workstation offers enough space for notebook/laptop or beamer
- VESA compatible (75 x 75 mm / 100 x 100 mm) when using a monitor (max. 81cm diagonal if a monitor is used)
- Maximum load capacity: up to 15 kg
- Rounded corners and edges
- Color: black
- Delivery is made carton-packed, minor self-assembly required

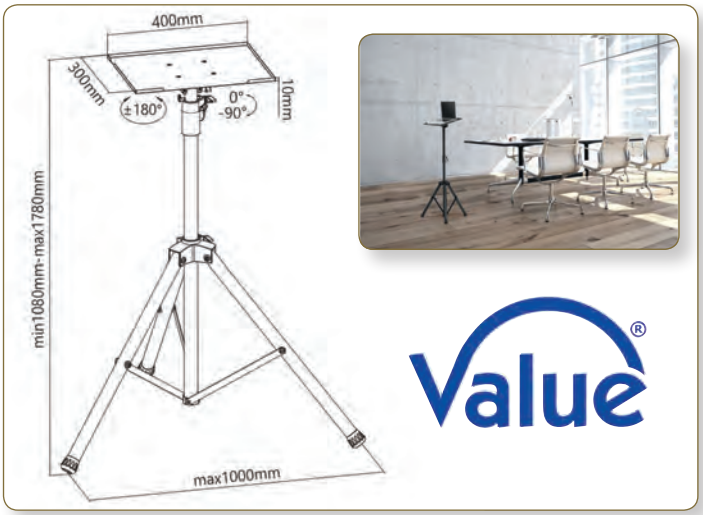



	Order-No.	– P.U.
VALUE Height Adjustable Multi-Purpose Tripod Stand, black	17.99.1168	– 1

VALUE LCD/TV Mobile Cart

Ideal for applications in conference rooms or class rooms!
- For an easy mobile use of a large LCD monitor or TV
- For fixing LCDs with:
- Handy holders for moving the stand
- Platform for a DVD player or notebook
- Cable channel inside vertical carrier

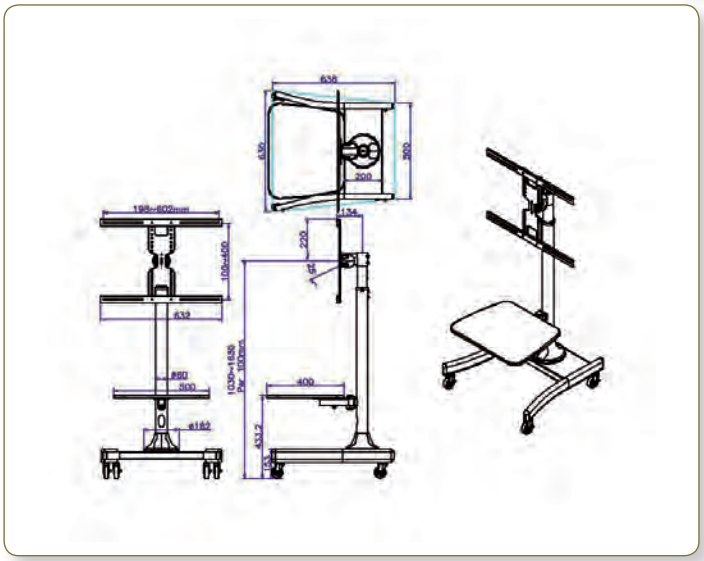



	Order-No. – P.U.
VALUE LCD/TV Mobile Cart	17.99.1164 – 1
VALUE LCD/TV Mobile Cart, heavy weight (up to 125kg)	17.99.1165 – 1

VALUE LCD/TV Mobile Cart, < 50kg (94 - 178cm / 37“ — 70“)

Ideal for applications in conference rooms or class rooms!

- For mounting screens with:
Horizontal mounting: 20 cm to 60 cm
Vertical mounting: 7,5 cm to 40 cm
- For LCD monitors up to 50 kg
- Screen diagonal: 94- 178 cm
- Adjustable height: 129cm / 137cm / 145 cm
- Platform for a DVD player or notebook e.g. a DVD player (surface 293 x485 mm; max. 10kg)
- Cable duct in the vertical carrier



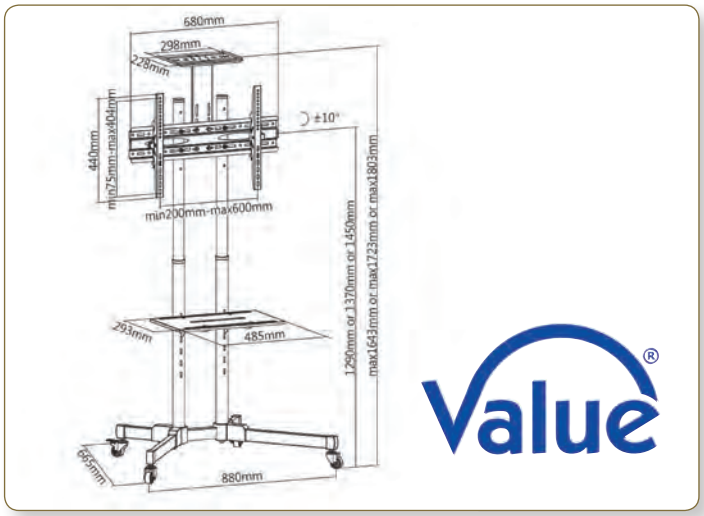



Video



	Order-No. – P.U.
VALUE LCD/TV Mobile Cart, < 50kg (94 - 178cm / 37“ - 70“)	17.99.1167 – 1

VALUE LCD/Plasma TV Cart, silver

Ideal for applications in conference rooms or class rooms!
- For an easy mobile use of a large LCD monitor or flat-screen TV
- For fixing LCDs with screen size: 69- 152 cm (27“- 60“)
- Load capacity: up to 50 kg
- Adjustable hight: 110 up to 180 cm
- TV can be tilted downward up to 15 degrees
- Platform for e. g. holding a DVD player or notebook (WxD): 498 x 400 mm
- Cables can go through the tube
- Four wheels for easy movement whereof two are lockable

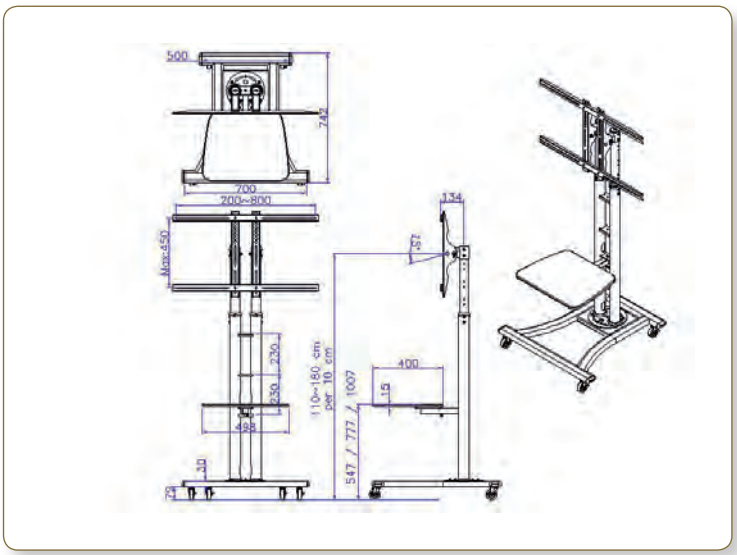





	Order-No. – P.U.
VALUE LCD/Plasma TV Cart, silver	17.99.1320 – 1

ROLINE LCD/TV Floor Stand, up to 40kg

The silver stand made of sturdy, matt aluminium is ideal for a TV that is to be placed and aligned centrally in the room - ideal for presentation and meeting rooms, but also for home use. The shelf offers space for a game console, a BluRay player or a receiver.

- Silver aluminium TV stand
- Height adjustable TV mount between 900-1060mm
- Best possible cable management due to the aluminium body
- Sturdy base plate
- +/- 45° rotation for the best possible room orientation
- Supports max. VESA: 400x400
- Maximum screen size: 32“-55“
- Maximum load capacity: 40kg



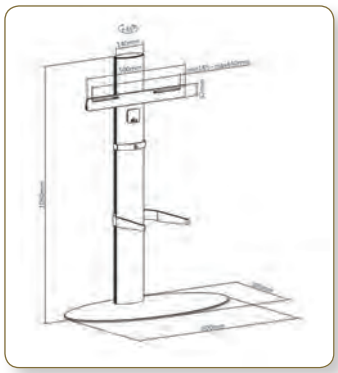



	Order-No. – P.U.
ROLINE LCD/TV Floor Stand, up to 40kg	17.03.1262 – 1

roline®
Designed for Professionals

ROLINE LCD/TV Mobile Cart, up to 50 kg

MEDICAL ENVIRONMENT

Ideal for applications in conference or class rooms, easily suitable for meetings and presentations!

- Telescopic Height Adjustable TV Cart
- Rotating function of 0°-90° to switch between „landscape“ and „portrait“ mode
- Optional Webcam Mount included in the scope of delivery
- Height adjustable TV mount
- Free-tilting design between +5° and-12° for multiple monitor viewing angles
- Quick-release spring lock adjusts height effortlessly
- Quick assembly shelf assures easy post-intallation
- Cable management keeps everything organized
- Sturdy base with heavy-duty casters
- Supports max. VESA: 600x400
- Suggested screen size: up to 94 cm- 177.8 cm (37“-70“)
- Maximum weight capacity: 50kg

Installation Video



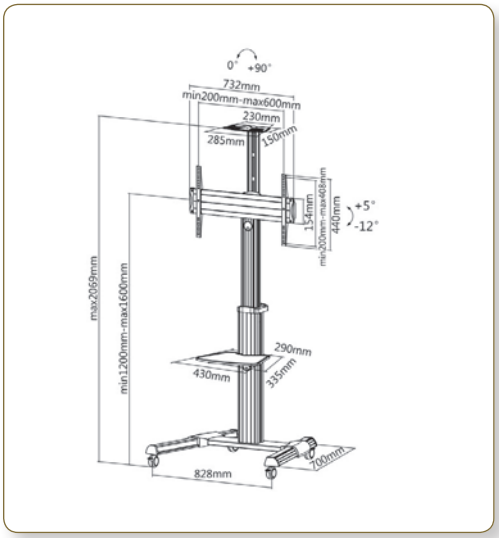



roline®
Designed for Professionals

	Order-No. – P.U.
ROLINE LCD/TV Mobile Cart, up to 50 kg	17.03.1260 – 1

ROLINE LCD/TV Mobile Cart, up to 100 kg

MEDICAL ENVIRONMENT

Ideal for applications in conference or class rooms, easily suitable for meetings and presentations!

- Telescopic Height Adjustable TV Cart
- Height adjustable TV mount
- Optional Webcam Mount included in the scope of delivery
- Free-tilting design between +5° and-10° for multiple monitor viewing angles
- Quick-release spring lock adjusts height effortlessly
- Quick assembly shelf assures easy post-intallation
- Cable management keeps everything organized
- Sturdy base with heavy-duty casters
- Supports max. VESA: 1000x600
- Suggested screen size: up to 152,4 cm - 254 cm (60“-100“)
- Maximum weight capacity: 100kg





roline®
Designed for Professionals

Installation Video

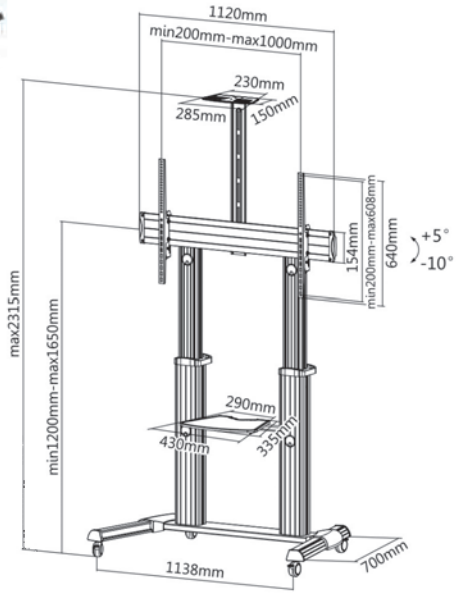

	Order-No. – P.U.
ROLINE LCD/TV Mobile Cart, up to 100 kg	17.03.1261 – 1

VALUE LCD TV Ceiling Mount



- Firm mounting of a LCD monitor on a ceiling
- Arm length: 64.5- 104.5 cm
- Load capacity: up to 20 kg
- Cables can be layed inside the arm
- LCD monitor can be swiveled and tiltled
- Meets VESA 75 x 75 mm,
  VESA 100 x 100 mm,
  VESA 100 x 200 mm,
  VESA 200 x 200 mm
- Contents: Ceiling mount, mounting material, manual

Technical data:	17.99.1107
Fixing:	ceiling mount
Load capacity:	up to 20 kg
Joints:	2
Arm length:	65 - 104 cm

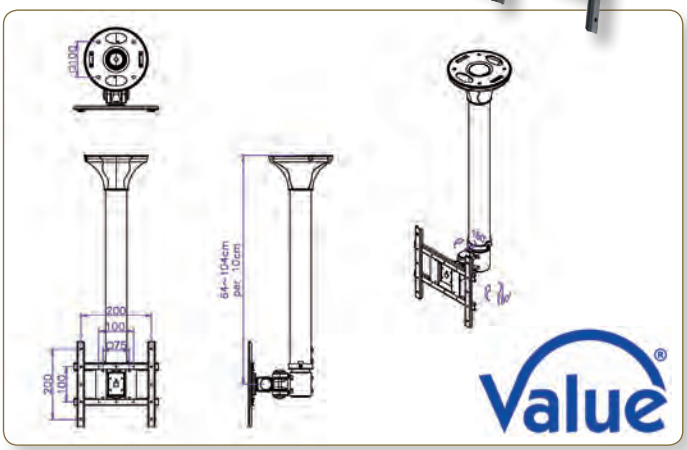

Order-No.	– P.U.
VALUE LCD TV Ceiling Mount, 2 Joints	17.99.1107 – 2

VALUE LCD/TV Ceiling Mount, 50kg



- Ceiling mount for a monitor/TV up to 42“
- Load capacity: up to 50 kg
- Meets VESA 75 x 75, 100 x 100, 100 x 200 ou 200 x 200 mm
- Arm length: 105- 156 cm
- -15° tilt; 360° swivel
- Contents: supporting arm

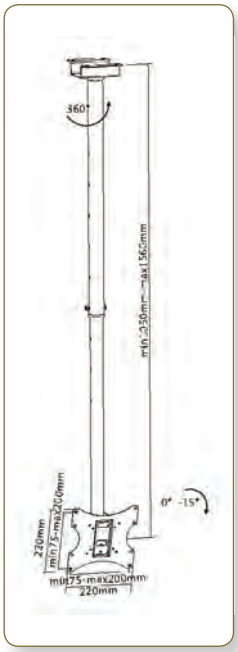

Order-No.	– P.U.
VALUE LCD/TV Ceiling Mount, 50kg	17.99.1217 – 3

VALUE Height-adjustable Monitor/Laptop Stand

Monitor/laptop stand made of wood, 2-step height adjustment and with cable suspension for a clean, tidy workplace

- Large platform footprint (600/900 x 250mm) for up to two monitors or laptop and devices such as speakers or pen holders
- Cable suspension on the rear for space-saving and tidy cable management
- Under the monitor platform there is plenty of space for documents or also for temporary storage of the keyboard
- Loadable up to 20kg
- Dimensions (WxHxD): 600/900 x 90/115 x 250mm
- Colour: black



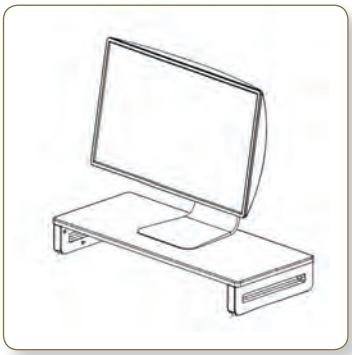





Order-No.	– P.U.
VALUE Height-adjustable Monitor/Laptop Stand, black	17.99.1340 – 6
VALUE Height-adjustable Monitor/Laptop Stand, black, extra-large	17.99.1341 – 6

ROLINE Cable Cover, Aluminium, 33 x 26mm / 50 x 26mm

ROLINE cable bridge made of lightweight, solid aluminium - with a large cable duct and intelligent folding mechanism for quick and easy adaptability.

- Closed rail for cable routing on the wall
- Unobtrusive design, best suited for offices and private users
- Very stable, therefore also suitable as floor rail
- Large opening for power and data cables
- Two-piece construction: Lower part with screw holes and rounded cover panel
- Colour: white
- Material: Aluminium
- Content: 1x cable cover 33 / 50 x 1100 x 26 mm

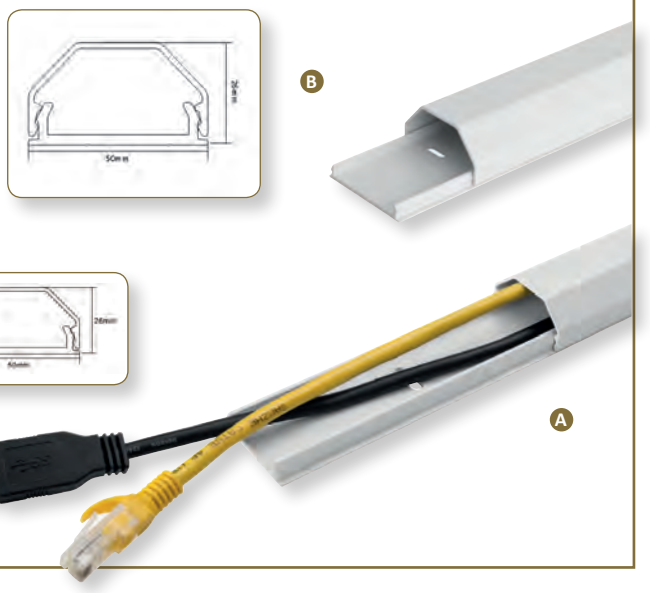

roline®
Designed for Professionals

		Order-No.	P.U.
ROLINE Cable Cover, Aluminium, 33x26mm, white, 1.1 m	A	19.08.3110	10
ROLINE Cable Cover, Aluminium, 50x26mm, white, 1.1 m	B	19.08.3111	10

ROLINE 2-Channel Aluminum Floor Cable Cover, 1104 x 139 / 92 mm

ROLINE cable bridge made of lightweight, solid aluminium - with two large cable ducts and intelligent folding mechanism for quick and easy adaptability.

- For covering loose cables on the floor
- Two large cable ducts for the feed-through and separation of voltage and data cables
- Protects against tripping hazards
- Modern, unobtrusive design that is ideal for everyday office and industrial use
- Folding mechanism for quick and easy cable laying
- Openings with black plastic covers to protect against scratches
- Material: aluminium
- Dimensions (WxDxH): 139mm / 92mm x 1104 x 22mm
- Colour: silver



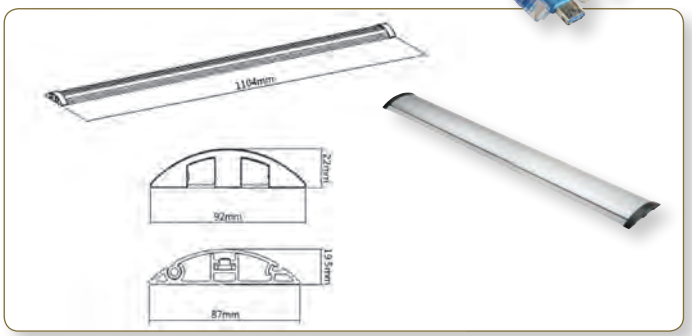

roline®
Designed for Professionals

		Order-No.	P.U.
ROLINE 2-Channel Aluminum Floor Cable Cover, 1104 x 139 mm		19.08.3106	4
ROLINE 2-Channel Aluminum Floor Cable Cover, 1104 x 92 mm		19.08.3107	6

VALUE Cable Box, small/ large

- Suitable next to desktops, TV / multimedia systems, etc.
- For an organized desktop/office
- To hide tangled cables / power sockets
- Opening for cable exit on both sides
- Dustproof
- Easy to store
- White plastic box
- Dimensions:
  235 x 115 x 120 mm (small)
  407 x 157 x 133.5 mm (large)





Value®

		Order-No.	P.U.
VALUE Cable Box, small, white	A	19.99.3236	8
VALUE Cable Box, large, white	B	19.99.3237	4

ROLINE Manual USB 2.0 Printer Switches

- This USB switch offers the possibility for 2 PCs to share a single USB device (e.g. a USB printer or scanner)
- Access to the USB device is via push button on switch or via hot key on keyboard
- Supports USB 2.0
- Two LEDs for port status indicaton
- Bus-powered mode, no external power supply needed
- Remark: Product similar to picture (4-port version)
- Contents: Switch, manual

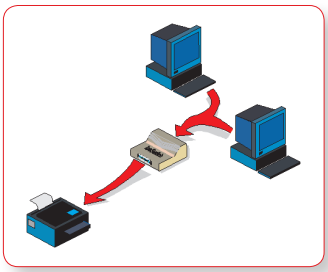



roline®
Designed for Professionals

Technical information	14.01.2332	14.01.2334
Input connections	2x USB Type B	4x USB Type B
Output connections	1x USB Type A	1x USB Type A
Dimensions (HxWxD)	-	-

	Order-No.	P.U.
ROLINE Manual USB 2.0 Printer Switch, 2 Ports	14.01.2332	20
ROLINE Manual USB 2.0 Printer Switch, 4 Ports	14.01.2334	20

ROLINE Dual Head KVM Switch, 1 User - 4 PCs, DVI, Audio

- Supports DVI dual head graphic cards
- Controls two computers with one USB keyboard, USB mouse and four DVI monitors
- Audio function (speaker, microphone)
- Supports DVI-D Single Link
- Max. resolution (nominal): up to 1920 x 1200
- Front panel push buttons, keyboard hot-keys or mouse (optional) for easy computer selection
- Auto scan function with selectable scan time interval
- Auto skip for inactive ports
- Easy to install- no software required
- Hot-pluggable
- Supported Operating Systems: Windows, Mac
- Contents: Switch, power supply, manual

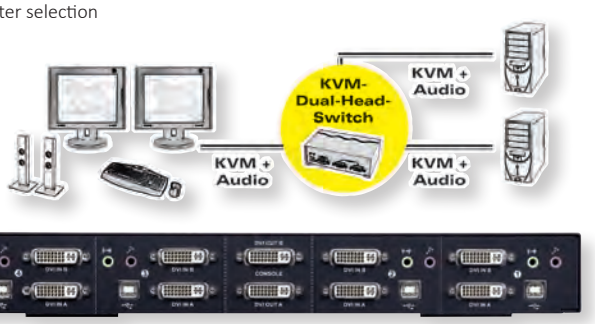

Technical data:	14.01.3362
Monitor connection:	2x DVI F
Keyboard/mouse connection:	2x USB type A F
Audio connection:	2x 3.5 mm F
PC monitor connection:	8x DVI F
PC keyboard/mouse connection:	4x USB type B F
PC audio connection:	8x 3.5 mm F
Max. resolution (nominal):	1920 x 1200
Dimensions (WxDxH):	44 x 340 x 114 mm
Power supply:	9 VDC, 1 A

roline®
Designed for Professionals

	Order-No.	P.U.
ROLINE Dual Head KVM Switch, 1 User - 4 PCs, DVI, Audio	14.01.3362	2

VALUE/ROLINE 8pin + MicroB to USB Charge & Sync Cable

- For the connection of devices like the iPhone on from the iPhone 5 that introduced the Lightning connector, as well as for iPods and iPads on from that generation
- This product is only made for devices with Lightning connector! It is NOT compatible with cables and peripherals designed for its predecessor, unless used with an adapter.
- Lighting and micro USB combo allows the cable to perform 2-in-1 functionality
- Connects to your iPhone, iPad, or iPod with Lightning Connector or Android smartphone and charges/syncs by connecting the USB connector into your wall charger or computer

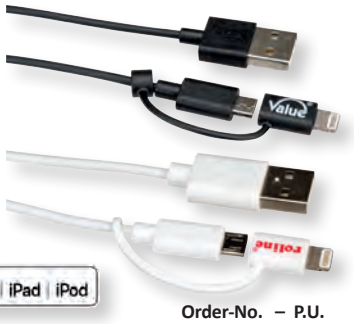

	Order-No.	P.U.
VALUE 8pin + MicroB to USB Charge & Sync Cable, black, 1.0 m	11.99.8325	10
ROLINE 8pin + MicroB to USB Charge & Sync Cable, white, 1.0 m	11.02.8325	10

VALUE USB 2.0 Cables, C - Micro B

To connect smartphones, tablet PCs, external hard drives, MP3 players and other micro B USB devices to your PC, laptop or charger with the new type C connection.

- USB 2.0 connection cable with micro B to type C male/male connector
- Suitable for data transfer rates of up to 480 Mbit/s
- Backwards compatible with USB 1.0
- Connectors: 1x USB Micro B connector, 1x USB type C connector
- Type: C- Micro B
- Colour: white



Value®

	Order-No.	P.U.
VALUE USB 2.0 Cable, C - Micro B, M/M, white, 2.0 m	11.99.9021	10

ROLINE USB Cable Type C + Micro B to USB A, OTG

Multipurpose USB 2.0 cable

- USB Type C and micro B combo allows the cable to perform 2-in-1 functionality
- Connect the cable to your Smartphone or tablet and charge your device by connecting the USB connector into your wall charger or transfer data by connecting it with your computer
- One end of the cable is equipped with a Micro USB B plug, alternatively through an attachment with a type C plug
- The second side of the cable has a type A plug, which can be converted into a type A socket by a side slider- and vice versa
- Supports OTG
- Complies with the standard USB 2.0 (transmission up to 480 Mbit/s)
- Colour: black

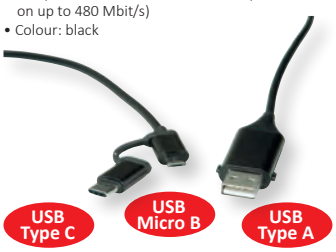

roline®
Designed for Professionals

	Order-No.	P.U.
ROLINE USB Type C (M) + Micro B (M) to USB A (M or F), OTG, black, 1.0 m	11.02.8327	10

ROLINE USB 2.0 Cable, reversible, A - Micro B

High quality USB cable with one Type A and one Micro USB connector (both reversible)

- For the connection of devices with Micro USB connector; e.g. smartphones / mobile phones or digital cameras / DSLR
- Meets standard USB 2.0 (transfer rate up to 480 Mbit/s)
- Colour: black



roline®
Designed for Professionals

	Order-No.	P.U.
ROLINE USB 2.0 Cable, reversible, A - Micro B, M/M, 1.0 m	11.02.8765	10

ROLINE USB 2.0 Cables, C - Micro B (reversible)

USB 2.0 Hi-Speed cable with high quality and improved shielding.
- For the connection of devices with Micro USB connector; e.g. smartphones / mobile phones or digital cameras / DSLR
- Improved shielding
- Supports data transfer rates of up to 480 Mbit/s
- High quality USB cable with one Type C and one reversible Micro USB connector
- Meets standard USB 2.0 (transfer rate up to 480 Mbit/s)
- Colour: black

	Order-No. – P.U.
ROLINE USB 2.0 Cable, C - Micro B (reversible), M/M, black, 1.8 m	11.02.8780 – 10
ROLINE USB 2.0 Cable, C - Micro B (reversible), M/M, black, 3.0 m	11.02.8781 – 10
ROLINE USB 2.0 Cable, C - Micro B (reversible), M/M, black, 4.5 m	11.02.8782 – 5

roline®
Designed for Professionals

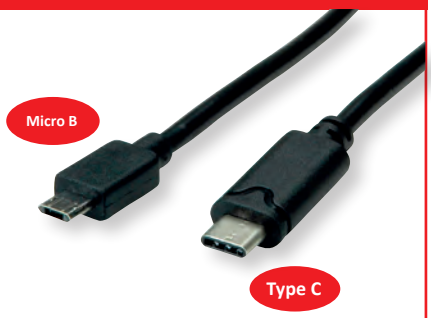

ROLINE USB 3.2 Gen 1 Cables, C - B

To connect smartphones, Tablets, external hard drives (HDD/SSD) and other USB devices to your PC, laptop or charger with the new USB Type C connection.
- USB 3.2 Gen 1 connection cable with Type B to Type C male/male connector
- Suitable for data transfer rates of up to 5 Gbit/s
- Connectors: 1x USB Type B connector, 1x USB type C connector
- Color: black

Note: According to the current specifications of USB.org we have adapted the technical data of our USB 3 products. The new designation for the already known USB specifications has been changed to USB 3.2 Gen 1 (formerly USB 3.0 / USB 3.1 Gen 1) and USB 3.2 Gen 2 (formerly USB 3.1 / USB 3.1 Gen 2).

	Order-No. – P.U.
ROLINE USB 3.2 Gen 1 Cable, C - B, M/M, black, 1.8 m	11.02.8880 – 10
ROLINE USB 3.2 Gen 1 Cable, C - B, M/M, black, 3.0 m	11.02.8881 – 10

roline®
Designed for Professionals



ROLINE Monitor Cables, DVI (24+1), Dual Link

4K 2160p UHD–1

Connect your Macbook, Ultrabook, Notebook/Laptop or PC to a DVI monitor or projector with DVI - with a maximum resolution of 3840x2160 @30Hz!
- DVI-D dual link version with (24+1)-pin assignment, recommended for monitors with bigger screen sizes
- ROLINE cable with gold plated contacts and metal connector housing
- Maximum resolution: 3840x2160 @30Hz
- Nylon-reinforced cable outer material for a better stability
- Thumbscrews

	Order-No. – P.U.
ROLINE Monitor Cable, DVI (24+1), Dual Link, M/M, black /silver, 1 m	11.04.5860 – 25
ROLINE Monitor Cable, DVI (24+1), Dual Link, M/M, black /silver, 2 m	11.04.5861 – 25
ROLINE Monitor Cable, DVI (24+1), Dual Link, M/M, black /silver, 3 m	11.04.5862 – 20
ROLINE Monitor Cable, DVI (24+1), Dual Link, M/M, black /silver, 5 m	11.04.5863 – 10
ROLINE Monitor Cable, DVI (24+1), Dual Link, M/M, black /silver, 7.5 m	11.04.5864 – 10
ROLINE Monitor Cable, DVI (24+1), Dual Link, M/M, black /silver, 10 m	11.04.5865 – 10

roline®
Designed for Professionals



ROLINE USB Type C Docking Station, 4K HDMI, VGA, DP, Fast Ethernet

The docking station is supplied for Macbooks, Ultrabooks or Notebooks/Laptops and provides a quick and easy connection to the workplace peripherals that you use every day, including one HDMI connector, that allows you a maximum resolution of up to 3840x2160 @30Hz!
- Plug & Play
- Aluminium casing
- Small, compact design
- System requirement: Windows 7/8/10 or MacOS X10.2 and higher

Connection to device:
- 1x USB 3.1 Type C M

Connection for peripheral devices
- 1x HDMI Video Output: Mirror or extend your screen to a TV, monitor or projector (max. resolution 2160p)
- 1x VGA (max. resolution 1080p)
- 1x DP (max. resolution 2160p)
- 1x RJ45 for Fast Ethernet
- Contents: Docking Station, manual

roline®
Designed for Professionals





	Order-No. – P.U.
ROLINE USB Type C Docking Station,1x 4K HDMI, 1x VGA, 1x DP, 1x Fast Ethernet	12.02.1116 – 10

ROLINE Type C - HDMI Adapter, M/F, 3x USB 3.2 Gen 1 A F, 1x PD (Power Delivery)

Connect your Macbook, Ultrabook, notebook/ laptop or PC with USB Type C connection quickly and easily to a monitor or TV via HDMI - with a resolution of up to 3840x2160 @30Hz! The additional ports (1x USB Type C with Power Delivery, 1x USB 3.0 / USB 3.2 Gen 1 and 2x USB 2.0) allow you to connect many different peripherals, such as keyboard, mouse, HDD/SSD and a power supply via USB Type C!

- USB 3.1 / USB 3.2 Gen 2 Type C to HDMI cable adapter, e.g. for MacBooks
- Connecting an HDMI Monitor or Projector with HDMI Connection
- Mirror or expand your display to an HDMI-enabled TV or monitor
- Compact aluminium housing
- No power supply required
- Power delivery function (for charging devices via the additional USB type C connector; 14.5V 2A)
- Connections: USB Type C plug, 1x HDMI socket, 3x USB 3.0 / USB 3.2 Gen 1 Type A socket and USB Type C socket (Power Delivery)
- Cable length: approx. 10 cm

Note: According to the current specifications of USB.org we have adapted the technical data of our USB 3 products. The new designation for the already known USB specifications has been changed to USB 3.2 Gen 1 (formerly USB 3.0 / USB 3.1 Gen 1) and USB 3.2 Gen 2 (formerly USB 3.1 / USB 3.1 Gen 2).



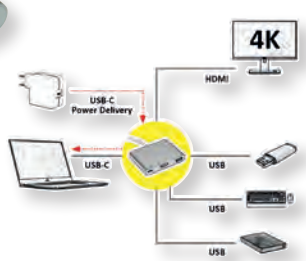

roline®
Designed for Professionals

	Order-No. – P.U.
ROLINE Type C - HDMI Adapter, M/F, 3x USB 3.2 Gen 1 A F, 1x PD (Power Delivery)	12.02.1134 – 10

ROLINE Type C - VGA / HDMI / DVI / DP Adapter

Connect your Macbook, Ultrabook, Notebook/Laptop or PC with USB Type C connector to a VGA, DVI, HDMI or DP monitor, TV or projector - with a maximum resolution of 3840x2160 @60Hz!

- USB 3.1 Type C to VGA / HDMI / DVI / DP cable adapter for Macbooks, Ultrabooks, Notebooks/Laptops or PCs with USB Type C interface
- Connect your device with USB Type C port to any monitor or projector with optional VGA, DVI, HDMI or DisplayPort port
- This adapter allows you to mirror or expand your display to an external display device
- Portable, compact design
- No power supply required
- Connections: VGA, DVI, HDMI and DP jack and Type C connector
- Cable length: approx. 10 cm
- Maximum resolution: 3840x2160 @60Hz





roline®
Designed for Professionals

	Order-No. – P.U.
ROLINE Type C - VGA / DVI / HDMI / DP Adapter (black)	12.03.3138 – 20

ROLINE USB Type C Docking Station, 4K HDMI, 3x USB 3.2 Gen 1, SD/MicroSD Card Reader, Power Delivery

The docking station is supplied for Macbooks, Ultrabooks or Notebooks/Laptops and provides a quick and easy connection to the workplace peripherals that you use every day, including one HDMI connector, that allows you a maximum resolution of up to 3840x2160 @30Hz!

- Plug & Play
- Aluminium casing
- Small, compact design
- System requirement: Windows 7/8/10 or MacOS X10.2 and higher

Connection to device:
- 1x USB 3.1 / USB 3.2 Gen 2 Type C M

Connection for peripheral devices
- 1x HDMI Video Output: Mirror or extend your screen to a TV, monitor or projector.
- 3x USB 3.0 / USB 3.2 Gen 1 ports (data transfer rate up to 5Gbit/s), for connection of wired keyboard/mouse, USB HDD/SSD, etc.
- 1x SD/TF Card Reader
- 1x USB Type C PD (Power Delivery)

Note: According to the current specifications of USB.org we have adapted the technical data of our USB 3 products. The new designation for the already known USB specifications has been changed to USB 3.2 Gen 1 (formerly USB 3.0 / USB 3.1 Gen 1) and USB 3.2 Gen 2 (formerly USB 3.1 / USB 3.1 Gen 2).

- Contents:Docking Station, manual

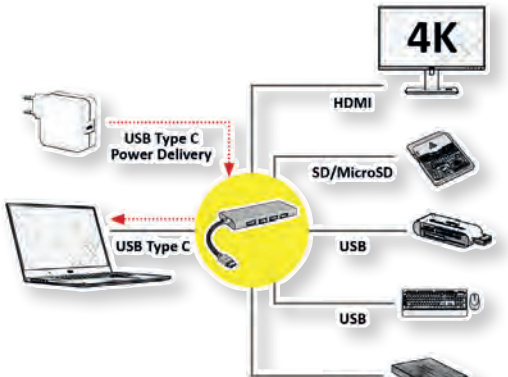



roline®
Designed for Professionals

	Order-No. – P.U.
ROLINE USB Type C Docking Station, 4K HDMI, 3x USB 3.2 Gen 1, SD/MicroSD card reader, 1x USB Type C PD (Power Delivery)	12.02.1115 – 5

ROLINE Device Server 1x RS232, for DIN Rail, black

- Expands RS232 COM ports over Ethernet networking
- Mode: Asynchronous serial communication
- Connectors: 1x DB9 M, 1x RJ-45 (10/100 Mbit/s)
- 10/100 Mbit/s, auto MDI/MDIX
- Gateway, IP address
- Baud rate up to 460.3 Kbit/s
- Operation mode: VSP COM (Virtual Serial Port), TCP Server, TCP Client, UDP, Paired Mode
- Signals: TXD, RXD, RTS, CTS, DTR, DSR, DCD, GND
- Flow Control: RTS/CTS, X-On/X-Off
- Supports HTTP, DHCP, ICMP (PING), Static IP and ARP
- 15 kV ESD protection for RS232 serial port
- For DIN Rail mounting
- Power connectors: 2-pin terminal block, DC socket
- Power Input: 9- 30VDC or main adapter 12 VDC, 1A
- Supported Operating Systems: Windows 2000 / XP / 2008 / Vista/ 7 / 8 (32/64-bit)



DIN rail

roline® Designed for Professionals

	Order-No. – P.U.
ROLINE Device Server 1x RS232, for DIN Rail, black	15.06.0503 – 4

ROLINE PCIe Adapter RAID

- Hardware PCIe Adapter 2x 110mm M.2 NGFF SSD
- Supports 6Gbps, 3Gbps SATA based M.2 NGFF 110mm, 80mm, 60mm, 42mm, 30mm SSD
- 2x M.2 NGFF type 22110-D5-B connector on board
- Movable M.2 NGFF stand-off and multiple plated-holes supports type 22110, 2280, 2260, 2242 and 2230 SSD
- Supports dual-sided SSD module 1.5mm component height on the top and bottom side
- 4pin power connector on board (12V)
- Transparent to the operating system and no driver required
- Supports: Windows 7 / 8 / 10, Vista, Server 2008/2012 (64bit / 32bit), and Mac OS 10.x
- Contents: Adapter, driver CD, manual

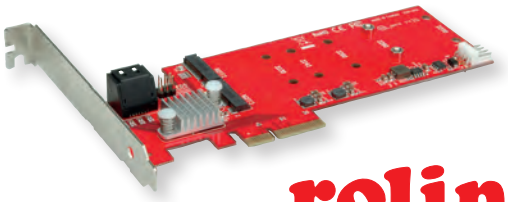

roline® Designed for Professionals

	Order-No. – P.U.
ROLINE PCIe Adapter RAID, 2x M.2+2x SATA	15.06.2119 – 10

ROLINE CardReader Type C + 2x USB 3.2 Gen 1, 1x PD (Power Delivery)

- Suitable for Smartphone+Tablets, DSLR, photo equipment
- Transfer your precious vacation pictures/videos from the memory card of your digital camera on your tablet, Macbook ...
- Supports USB 2.0
- Card Reader works with multiple media, as e.g. SD (Secure Digital) Card, SDHC, MS (Memory Stick), MS Duo, mini/micro SD
- No adapter required for Micro SD/ M2 Cards
- Power Delivery Function (for charging of devices via the additional type-C connection; 20V3A)
- Contents: Card Reader





roline® Designed for Professionals

	Order-No. – P.U.
ROLINE CardReader Type C + 2x USB 3.2 Gen 1, 1x PD (Power Delivery)	15.08.6257 – 10

ROLINE Calculator Keypad, 2x USB 3.0 Hub

Unique combination of commercial calculator, keypad and USB 3.0 Hub with 2 ports.

- Fast switching between commercial calculator and keypad mode
- In keypad mode, you expand your notebook keyboard to the usual numeric keypad- the entering of numbers it's safer, more comfortable and faster
- In calculator mode, you can use the basic arithmetical operations plus square root function and the function of a tax calculation. (the device keep the result via buffer). The result of a calculation can be sent to the PC (eg, for further use in an Excel sheet).
- PC Keypad and commercial calculator
- 2x USB 3.0 Hub
- Plug & Play
- Easily transfer your typo to Excel
- Powered by battery, solar cells or the USB interface
- USB cable length: about 1.40 m
- Contents: Calculator / numeric keypad, USB cable, user manual



roline® Designed for Professionals

	Order-No. – P.U.
ROLINE Calculator Keypad, 2x USB 3.0 Hub	18.02.2900 – 10

ROLINE USB 2.0 CardReader for Smartphone+Tablet

- Suitable for all Android Smartphones/ Tablets with a Micro B USB interface which enables OTG function
- Transfer your precious vacation pictures from the memory card of your digital camera on your Android smartphone / tablet using the ROLINE card reader
- Supports USB 2.0
- Card Reader works with multiple media, as e.g. SD (Secure Digital) Card, SDHC, MS (Memory Stick), MS Duo, mini/micro SD
- No adapter required for Micro SD/ M2 Cards
- Supported Operating Systems: Android
- Contents: Card Reader





roline® Designed for Professionals

	Order-No. – P.U.
ROLINE USB 2.0 CardReader for Android Smartphone+Tablet	15.08.6252 – 10

VALUE Type C - 2x HDMI Adapter, M/F

USB 3.1 Type C to Dual HDMI Cableadapter for Macbook, Ultrabook, Notebook/Laptop or PC - allows you to mirror or extend your existing screen at a resolution of up to 3840x2160 @30Hz!

- USB 3.1 Type C to 2x HDMI cable adapter for e.g. MacBook
- Connect your device with USB Type C connection to an HDMI monitor or projector with HDMI input
- Mirror or extend your image to up to two display devices
- Portable, compact design
- No power supply required
- Connections: 2x HDMI socket and type C plug
- Cable length: approx. 10 cm

Note: According to the current specifications of USB.org we have adapted the technical data of our USB 3 products. The new designation for the already known USB specifications has been changed to USB 3.2 Gen 1 (formerly USB 3.0 / USB 3.1 Gen 1) and USB 3.2 Gen 2 (formerly USB 3.1 / USB 3.1 Gen 2).

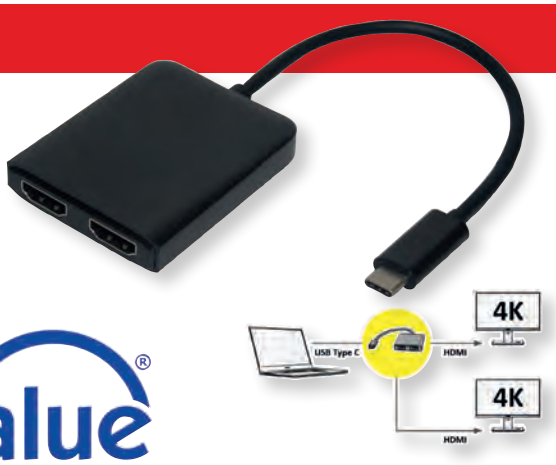

	Order-No. – P.U.
VALUE Type C - 2x HDMI Adapter, M/F	12.99.1132 – 10

VALUE USB 3.2 Gen 1 Hub, 3 Ports, Type C connection Cable + SD/Micro SD Card Reader

Transfer your vacation pictures/videos from the memory card of your DSLR, digital camera or other equipment to your tablet, Macbook or other USB Type C device!

- Ideal for MacBooks and Ultrabooks, but also for mobile devices such as tablets
- Supports major SD and Micro SD card formats
- Plug and Play solution without driver installation or the like
- Power supply via USB Type C interface
- Compact, matt black plastic housing





	Order-No. – P.U.
VALUE CardReader Type C + 3x USB 3.2 Gen 1, SD/Micro SD Card Reader	15.99.6252 – 20

VALUE HDMI Extender over Twisted Pair

1080p FULL HD

HDMI extension via twisted pair cable up to 100 meters - with a resolution of 1920x1080 @60Hz!

- To extend the distance between source and display up to 100 meters
- Max. Resolution from 1920x1080 @60Hz up to 100m using a Cat. 5e Twisted Pair cable
- HDMI cable length max. 2m
- Sturdy metal housing
- HDCP compatible
- Contents: Transmitter, receiver, 1x plug-in power supply (9V DC; 1A) for transceiver, short instructions, 2x infrared cable and remote control



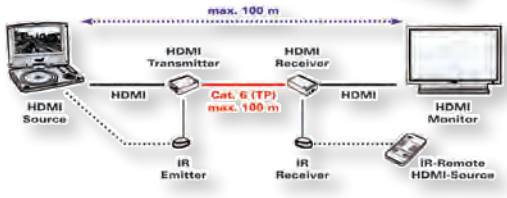

digital signage

	Order-No. – P.U.
VALUE HDMI Extender over Twisted Pair, 100.0 m,	14.99.3463 – 5

ROLINE Active DVI Extender over Twisted Pair

- DVI Extender (one Local and one Remote Unit) in combination with a twisted pair cable extends a DVI-D video signal up to 50 meters
- Max. distance from local unit to remote unit: 50 m
- Supports DVI-D
- EDID Function
- Max. resolution (nominal): 1920 x 1080
- Metal housing
- Contents: Local unit (RJ-45 F, DVI F), remote unit (RJ-45 F, DVI F), 2x power supply, manual

Technical Data:

Max. resolution (nom.):	1920 x 1080
Local Unit:	1x RJ-45 F, 1x DVI F
Remote Unit:	1x RJ-45 F, 1x DVI F

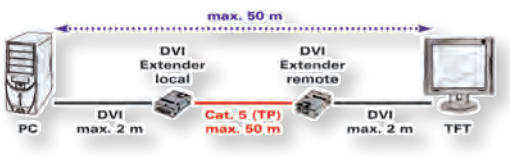

digital signage



	Order-No. – P.U.
ROLINE Active DVI Extender over Twisted Pair, 50 m	14.01.3408 – 5

ROLINE Wireless Audio/Video System, HDMI

1080p FULL HD

The practical ROLINE Wireless HDMI Audio/Video System transmits an HDMI signal wirelessly from a video source such as a DVD player, PC/laptop or console to a TV, beamer/projector or monitor - in a Full HD resolution of 1920x1080 @60Hz and up to 300m range!

The devices are connected via HDMI. The antennas enable wireless transmission of the HDMI signal between transmitter and receiver over a distance of up to 300 meters. The HDMI signal is encrypted for secure transmission.

- Transmits an HDMI signal wirelessly
- Antennas for audio/video transmission up to 300m distance between source and display device
- Suitable for mounting under a tabletop or on the wall, for maximum flexibility
- Sturdy metal housing in black
- Resolution: Supports Full HD (1920x1080 @60Hz)
- 3D support
- HDCP compatible
- Contents: Sender, receiver, 2x power supply, manual





roline® Designed for Professionals

	Order-No. – P.U.
ROLINE Wireless Audio/Video System, HDMI, 300 m	14.01.3414 – 2

VALUE HDMI 4K Matrix Switch, 6 x 2, with Remote Control

4K

Ideal solution for multiple HDMI distribution use in retail product demonstration, training and public display applications

- Six HDMI High Speed input signals can be switched to two HDMI High Speed output devices
- Supports Full HD
- Supports 3D
- PIP- Picture-in-Picture functionality- helps for a quickly overwiew of all the other 5 input sources (synchronously)
- Max. resolution (nominal): 3840 x 2160 @30Hz
- Supports 480i, 480p, 720i, 720p,1080i and 1080p
- Supports Blu-ray 24/50/60fps/HD-DVD/xvYCC
- Supported digital audio formats: DTS-HD/ Dolby-trueHD/LPCM7.1/DTS/Dolby-AC3/DSD
- Supports SPDIF digital audio format: Dolby Digital (AC3)/ DTS/ LPCM 2CH
- Input devices can be switched by IR remote control or by push buttons on the switch
- HDMI input signal /output signal can be transmitted over distances of up to 10m (1080p) / 5m (4K@30Hz)
- Contents: HDMI Matrix Switch, power supply, remote control, QIG

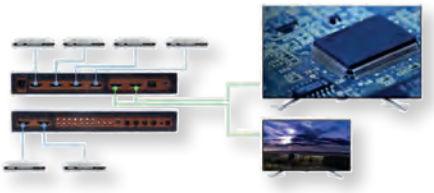



Value®

	Order-No. – P.U.
VALUE HDMI 4K Matrix Switch, 6 x 2, with Remote Control	14.99.3579 – 5

ROLINE DVI Video Splitter

- Applications: multimedia, presentations, demos, etc.
- Duplicates DVI Video signals to two DVI Video outputs
- Max. resolution: 1920x1200
- Supports cascading of splitters
- Contents: Splitter, main adapter, manual

Technical Data:	14.01.3550
Input video:	1x DVI F
Output video:	2x DVI F
Input audio:	1x 3,5mm F
Output audio:	2x 3,5mm F
Max. resolution (nominal):	1920 x 1200
Dimensions (LxWxH):	180 x 85 x 20 mm
Power supply:	9V DC, 0,6A

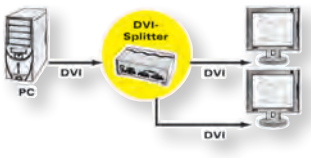



roline® Designed for Professionals

	Order-No. – P.U.
ROLINE DVI Video Splitter, 2-way	14.01.3550 – 6

ROLINE HDMI 4K Audio Extractor LPCM 2.1

4K

The ROLINE HDMI 4K2K Audio Extractor allows you to decouple audio signals from the HDMI signal.

Not all monitors have good speakers. With the extractor you can redirect the audio signals via S/PDIF (optical) or analog via 3.5mm ports on a speaker system, the pure image signal goes to the screen.

- Supports HDMI, HDCP 1.2
- Audio-rate (sampling frequency for S/PDIF as HDMI) to 192kHz
- Supports high bit-rate audio
- Supports video resolution up 4K and 3D
- HBR audio supported
- Supports CEC bypass
- Supports up to 4 x 3.5 mm phone jacks for analog multi-channel audio outputs
- Power supply (5V DC, 3A) included
- Contents: extractor, power adapter, user manual

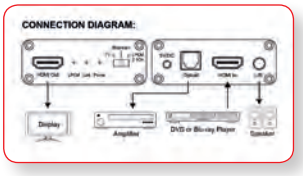



roline® Designed for Professionals

	Order-No. – P.U.
ROLINE HDMI 4K Audio Extractor LPCM 2.1	14.01.3443 – 20

VALUE HDMI / Mini DisplayPort/ HDMI to HDMI Switch

4K | 2160p ULTRA HD

Displays the video output of 2 HDMI or Mini DisplayPort sources on a monitor, TV, or projector.
Allows several HDMI and DisplayPort sources to be connected to one HDMI display like e.g. a monitor, TV, projector.

- Connectors input 3-way: 2x HDMI Type A F, 1x Mini DisplayPort F
- Connector output: 1x HDMI F
- Supports 480p, 720p, 1080i and 1080p, 2160p
- Selects input source via push button
- LED indication for source selection
- Plug & play, no software required
- HDCP 2.2 supported
- Contents: Switch, power supply, manual



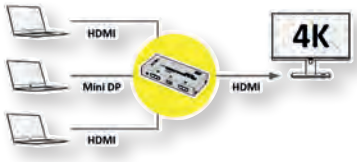

	Order-No.	P.U.
VALUE HDMI / Mini DisplayPort/ HDMI to HDMI Switch	14.99.3540	15

VALUE HDMI / Mini DisplayPort/ DisplayPort to HDMI Switch

4K | 2160p ULTRA HD

Displays the video output of an HDMI, DisplayPort or Mini DisplayPort sources on a monitor, TV, or projector.
Allows several HDMI and DisplayPort sources to be connected to one HDMI display like e.g. a monitor, TV, projector.

- Connectors input 3-way: 1x HDMI Type A F, 1x DisplayPort F , 1x Mini DisplayPort F
- Connector output: 1x HDMI F
- Supports 480p, 720p, 1080i and 1080p, 2160p
- Selects input source via push button
- LED indication for source selection
- Plug & play, no software required
- HDCP 2.2 supported
- Contents: Switch, power supply, manual



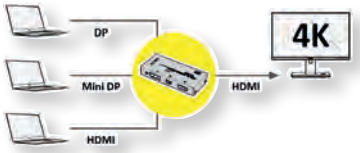

	Order-No.	P.U.
VALUE HDMI / Mini DisplayPort/ DisplayPort to HDMI Switch	14.99.3541	15

VALUE DisplayPort Switch, 2-way

2-Port DisplayPort v1.2 Switch for switching between two sources on one display device - with a resolution of up to 3840x2160 @60Hz!

- Switching between the sources is done by push buttons on the switch or remote control.
- Simple plug and play solution without additional software
- Resolution: max. 3840x2160 @60Hz (at max. 1m input and max. 3m output)
- Black metal housing
- Screwable due to the brackets fastened to the underside
- HDCP 2.2 and DPCP compatible
- Contents:DP Switch, power supply, short manual, remote control



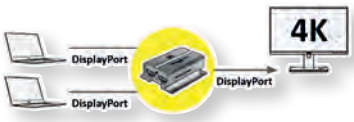

	Order-No.	P.U.
VALUE DisplayPort Switch, 2-way	14.99.3542	6

ROLINE DisplayPort Splitter

4K

- The DisplayPort splitter allows single DP source to be displayed on two/four DP input monitors simultaneously
- Supports video resolution up to 3840 x 2160 (@30Hz) and audio up to PCM 7.1 (32-192 kHz sample rate)
- Supports 1.62/2.7 Gb/s data rate (Low/High bit rate)
- Ideal device for your DP source to applications like multi display, information sharing, advertising program
- Remark: the device supports only DisplayPort mode, it can not connect DP to HDMI level shift convert
- Contents: splitter, power supply, manual

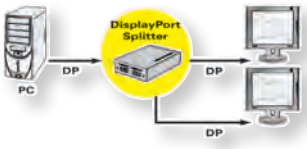



	Order-No.	P.U.
ROLINE DisplayPort Splitter, 2-way	14.01.3590	10

Hook-and-Loop Stripes

- Versatile and reusable design
- User-friendly
- The detachable silicone closure allows easy but secure closure and opening
- Durable and elastic silicone material
- Available in two different lengths (4 gray hook-and-loop stripes)



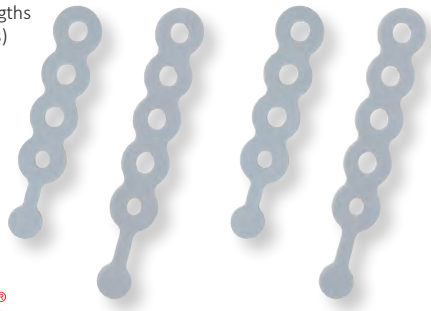

roline®
Designed for Professionals

	Order-No. – P.U.
Hook-and-Loop Stripes, 4 pcs.	19.08.3251 – 25

28-in-1 Screwdriver Set

- Mini screwdriver series
- Plastic etui
- Precasted holder for tools to avoid loss
- Heavy-Duty handle made of plastic for comfortable operation
- Fast turning swivel caps on handle
- Tools made of Chrome Vanadium alloy

- Contents:
- 1 Handle with bit holder
- 5 Philips bits: PH000, PH00, PH0, PH1, PH2
- 5 Slotted bits: SL1.5, SL1.7, SL2, SL3, SL4
- 8 T-bits: T5, T6, T7, T8, T9, T10, T15, T20
- 7 Hex bits: HN3, HN3.5, HN4, HN4.5, HN5, HN5.5, HN6
- 2 U shape antenna remover
- 1 Hex bit extender
- Leather casing



	Order-No. – P.U.
28-in-1 Screwdriver Set	19.06.2085 – 20

VALUE Car Smartphoneholder, Air vent fixing, Magnetic

Practical, magnetic holder for smartphones - suitable for many car types thanks to its attachment to the ventilation grill

17.99.1098
- Extra large, rectangular support surface of approx. 30x50mm for secure, strong hold of your smartphone
- Rubberized surfaces and thus even better protection against scratches and slips
- Also suitable as a holder for mobile navigation devices
- Magnetic metal plate included in scope of delivery
- 360° rotation

17.99.1099
- Extra large, rectangular support surface of approx. 30x50mm for secure, strong hold of your smartphone
- The integrated ball-and-socket joint allows 360° rotation and thus optimum alignment
- No scratches because of rubberized surfaces (soft touch finish to protect your smartphone)



Value®

	Order-No. – P.U.
VALUE Car Smartphoneholder, Air vent fixing, Magnetic, rotatable	17.99.1098 – 10
VALUE Car Smartphoneholder, Air vent fixing, Magnetic, black	17.99.1099 – 10

USB Type C Measurement Instrument with Display

This meter allows you to determine the power quality between your USB Type C sockets.
Voltage and current are measured simultaneously.
Simply connect the meter between your Macbook/notebook and the power supply and read off the charging current - ideal for quick testing of power supplies, sockets and cables!
- The optimal solution for monitoring the power supply of your USB Type C ports
- With the USB Type C meter you can measure voltage and current of the compatible USB Type C ports.
- Also for measuring USB Type C laptops or smartphones.
- Compact design, with bright, clear display for easy reading of the measured values
- Display of the values in volts, amps and mAh
- Indication of the current direction during charging process
- Passthrough charging functionality: the meter monitors power consumption and simultaneously charges your USB Type C device.
- Bypass of all USB data (Version 1.1 to 3.1 Gen 2): data running over the cable route is not disturbed.
- Without affecting the normal USB operation, also with USB Type C alternate mode-Video and USB Type C charging process
- Maximum voltage and current range: 20V 5A
- voltage and current measurement accuracy +/- 5%.
- Power consumption 5V / 30mA



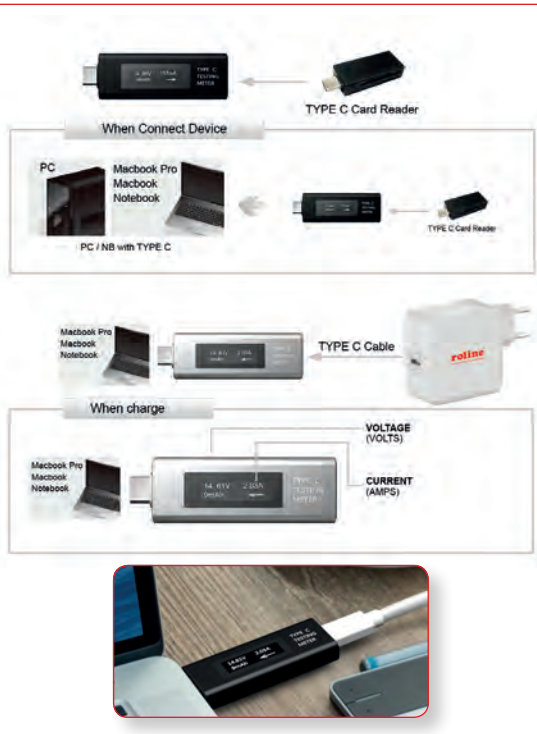

	Order-No. – P.U.
USB Type C Measurement Instrument with Display	13.01.3331 – 10

ROLINE Wireless Charging Stand for Mobile Devices, 10W

Wireless Charging Stand for matching smartphones or tablets - the two integrated coils with up to 10W in the charger allow a smartphone to be charged in „portrait“ or „landscape“ mode, for example.

- Charges a Qi-compatible smartphone or other suitable Qi device
- Two charging coils for up to 10W power: for charging in „Portrait“ or „Landscape“ mode of your smartphone
- Plug & Play- No driver required
- Ideal for e.g. office or bedroom
- Integrated LED display
- Colour: black
- Contents: Qi charging station, USB charging cable, operating instructions



roline®
Designed for Professionals

	Order-No. – P.U.
ROLINE Wireless Charging Stand for Mobile Devices, 10W	19.11.1010 – 10

ROLINE Wireless Charging Mouse Pad for Smartphones and Mice, 10W

Wireless Charging Mouse Pad for wireless charging of smartphones and mice - the integrated coil in the mouse pad with up to 10W, the device can be charged very quickly and efficiently.

- Charges a compatible smartphone or other matching Qi devices, such as mice that support wireless charging
- One charging coil for up to 10W of power
- Plug & Play, no additional software installation necessary
- Perfect for the office, home office or mobile workplace
- Integrated LED display
- Black mouse pad with leather-like surface
- Contents: Wireless Charging Mouse Pad, USB Charging Cable, User Manual

REMARK: The smartphone is not included



roline®
Designed for Professionals

	Order-No. – P.U.
ROLINE Wireless Charging Mouse Pad for Smartphones and Mice, 10W, black	19.11.1014 – 10

ROLINE Multiport USB Charger + Wireless Charging Pad for Mobile Devices, 10W

5-Port Charging Station with 1x Quick Charge 3.0, 1x Type C and an additional wireless charging pad for QI-enabled devices - the integrated coil with up to 10W allows the device to be charged very quickly and efficiently!

- Power and charge up to 5 devices (smart phones, tablet PCs, MP3 players, or other matching Qi devices) at once in one convenient location on your desktop, counter top, lobby, or waiting room... or anywhere else, where tablets or smartphones need to be highly available
- Most cell phones and tablets fit in station's slots without removing protective cases
- 5 Powered USB Ports (4x USB type A- one of them compliant with Quick Charge QC3.0) + 1x C (Power Delivery, max. 30W)
- Wireless Charging- one charging coil for up to 10W power
- Over voltage/current, output short circuit protection, over load protection on each port
- Built-in smart charging chipset provides and determines the charge needed for your device, delivering a steady and safe charge
- Plug & Play- No driver required
- Integrated LED display
- Input: 100-240V 50/60Hz
- Output:
  - Type C PD Output: 5V/3A;9V/3A;12V/2.5A/15V/2A (PD max. 30W);
  - Wireless Output: 10W Fast charge;
  - QC 3.0 Output: 3.6V-6V, 3A, 6.5V-9V, 2A; 9V-12V, 1.5A;
  - Smart Output: 3x 5V, 2.4A(max);
- Total Output: max. 55W
- Contents: Charging station, connection cable, manual

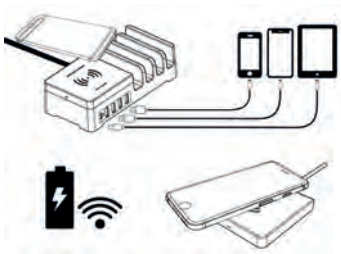



roline®
Designed for Professionals

	Order-No. – P.U.
ROLINE Multiport USB Charger + Wireless Charging Pad for Mobile Devices	19.11.1012 – 5

VALUE USB Charging Station, 7 Port, with Storage Box

Charges up to 7 devices simultaneously via USB, such as smartphones, tablets, eReader and many other devices.

- Provides 7 USB sockets (5x type A, 1x QC3.0, 1x type C)
- Easy to use at home or on the go; most smartphones and tablets fit (even with a case) into the holders on the device.
- Detachable connection cable (1.2m). (IEC320 C7 on Euro flat plug)
- Overvoltage protection on each port
- Smart charging function: Determines the charging demand of each connected device and charges- controlled- according to
- The power supply unit, cables and the corresponding holding rails can be stowed in the housing in a space-saving and safe manner

Technical Specifications

- Charger with mains input and seven USB outputs, 5x type A socket, 1x QC3.0, 1x type C
- Input voltage: 100- 240V AC, 50- 60Hz
- Output voltage: 5x type A DC 5V 1.5A/2.4A; 1x QC3.0 DC 3.6V- 5V / 2A, 5.2V- 9V / 2A, 9.2V- 12V /1.5A; 1x type C 5V 3A

- Contents: 1x USB 7-Port Smart Charging Hub, 1x main adaptor 15VDC/4A + AC Power Cable, 1x Storage Box, 8x Removable Brackets

REMARK:
Please see for additional charging stations page 7.08







	Order-No. – P.U.
VALUE USB Charging Station, 7 Port, with Storage Box	19.99.1069 – 4

VALUE Wireless Charging Pad for Mobile Devices, 10W

Wireless Charging Pad for wireless charging of QI-enabled smartphones - the integrated coil with up to 10W in the charger allows the device to be charged very quickly and efficiently.

- Charges a compatible smartphone or other matching Qi devices
- One charging coil for up to 10W of power
- Plug & Play- No driver required
- For use, for example, at the workplace in the office or at home
- Integrated LED display
- Colour: black
- Contents: Wireless charging pad, manual





	Order-No. – P.U.
VALUE Wireless Charging Pad for Mobile Devices, 10W	19.99.1011 – 10

ROLINE USB QC Car Charger, 2 Port, (A + C), 12W

Now you can easily charge your tablet PC, iPad, smart phone, iPhone, MP3 player and other USB devices in your car!

- Connector: 1x USB Type A F, 1x Type C F
- Input voltage: DC 12 V- 24 V
- Output voltage:3.6V – 6V 3A / 6.1V – 9V 2A / 9.1V – 12V 1.5A
- Power output: 18W
- Supports Quick Charging to QC 3.0
- Dimensions: 33 x 68 mm



roline®
Designed for Professionals

	Order-No. – P.U.
ROLINE USB QC Car Charger, 2 Port, (A + C), 12W	19.07.1053 – 20

ROLINE USB Power Car Charger

- Car charger with 2 USB type A F connectors
- For power supply and charging of devices with external power supply over USB
- E.g. for MP3 players, mobile phones, smart phones etc.



Technical data:	19.07.1055
Input:	12-24 V DC
Output:	2x USB A F
Power:	15,5W (5VDC;3,1A)
Dimensions:	38 x 75 mm

roline®
Designed for Professionals

	Order-No. – P.U.
ROLINE LED USB Car Charger, 2 Port, 15W	19.07.1055 – 10

VALUE PoE / PoE+ - Tester/Detector

With the increase of connecting PoE equipment over data lines you can damage sensitive equipment (like e.g. IP-telephony, access points, routers, network cameras, etc.) with a simple misconnection, therefore you may protect your investment in expensive network equipment by testing the lines before you plug in anything.

The new useful PoE Finder allows the network administrator to find out in one second if a network cable is supplied with current. Protect old devices and quickly and easily find wires supplied with current. The use of the PoE Finder is very easy. Just plug in the network cable that has to be tested. The LED of the PoE finder will shine if the cable is supplied with power.

- Compact designed PoE tester ideal for testing of PoE installations
- Compliant with 802.3af / 802.3at PoE standard and passive PoE at 10/100/1000 data rates
- Test mode A PoE (pins 12, 36) (Endspan)
- Test mode B PoE (pins 45, 78) (Midspan)



B



A

		Order-No.	– P.U.
VALUE PoE - Tester/Detector	A	13.99.3009	– 20
VALUE PoE/PoE+ - Tester/Detector	B	13.99.3010	– 20

VALUE LCD/Plasma TV Wall Holder, Low Profile

This wall mount allows a very discreet installation of a LCD/Plasma TV, perfect for e.g. a wooden wall.

- Weight capacity: up to 40 kg
- Screen Size: 81 cm up to 139,7 cm
- Low profile- very small distance to wall, 33 mm
- Max. VESA 400 x 400 mm
- Integrated bubble level assures alignment and provides installation instructions
- Innovative quick-release mechanism allows for a quick and easy installation

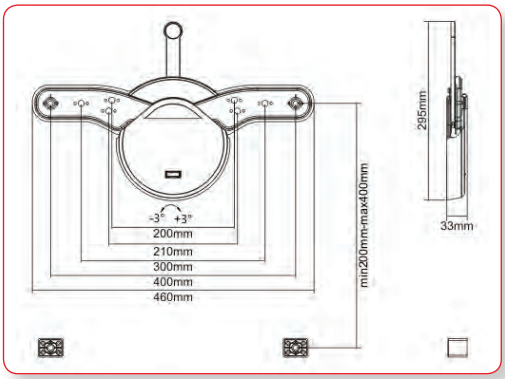



Installation Video

	Order-No.	– P.U.
VALUE LCD/Plasma TV Wall Holder, Low Profile, black /silver	17.99.1154	– 10

VALUE LCD/TV Wall Mount, 6 Joints

- The built-in gas spring ensures freely positioning of your screen and it can be easily adjusted to fit varied weights
- Mounts a monitor onto a wall
- Integrated cable management system
- Swiveling arm offer maximum viewing flexibility (+90° –-90°)
- Freely tilting allows easy TV angle adjustment (+5° – 15°)
- Level adjustment (-3°- +3°)
- Load capacity: up to 30 kg
- Meets max. VESA 200 x 200 mm
- Arm length: 56,3 cm



A

B

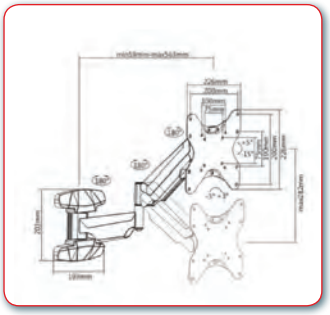

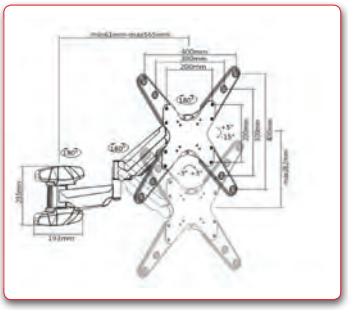

Installation Video

		Order-No.	– P.U.
VALUE LCD/TV Wall Mount, < 107 cm (23‘‘- 42‘‘), 6 Joints, black	A	17.99.1156	– 2
VALUE LCD/TV Wall Mount, < 139 cm (23‘‘- 55‘‘), 6 Joints, black	B	17.99.1157	– 2

INDEX

A

Adapters
• Display (VGA, DVI, HDMI, DP) ... 3.34 - 3.40, 3.42, 5.07 - 5.13, 6.02
• Fiber Optic ... 1.59
• HDD/SSD/Storage ... 3.47, 4.03 - 4.04
• Keyboard/Mouse ... 3.55
• PCI, PCI-Express ... 4.02
• RS232/RS485 ... 3.57 - 3.60, 4.02
• USB ... 3.04 - 3.13, 3.28 - 3.29
AOC Fibre cables (USB, HDMI, DisplayPort) ... 6.06 - 6.07
AT Modem/Printer Cables ... 3.14
Audio Converters / Extractors ... 6.13
A/V Audio Video Modules ... 6.14

B

Batteries for UPS ... 7.02
Blank Panels ... 1.47 - 1.51
Boxes for wall mount/flush mount ... 1.36 - 1.37

C

Cabinets 19'' ... 1.62
Cables
• 9-pole / 25-pole ... 3.14
• Cinch ... 3.44 - 3.45
• Cover/Tunnel ... 8.12, 10.12
• DisplayPort ... 3.22 - 3.27, 3.34 - 3.41, 6.07
• DVI ... 3.16 - 3.17, 3.30, 3.31
• Fibre Optic ... 1.52 - 1.57
• Fibre Optic (USB, HDMI, DisplayPort) ... 6.06 - 6.07
• FTP ... 1.16, 1.21, 1.24, 1.27 - 1.28
• HDMI (HD/UHD) ... 3.17 - 3.21, 3.31 - 3.33, 6.05 - 6.07
• Keyboard/Mouse ... 3.15
• Modem/Printer ... 3.14
• Power Connection/Extension/Supply ... 3.48 - 3.53, 7.10 - 7.14
• RJ-12 ... 3.54
• RS232 ... 3.15, 3.57 - 3.58
• SATA ... 3.46 - 3.48
• S/FTP ... 1.17 - 1.19, 1.22, 1.25 - 1.33
• Toslink ... 3.45
• USB ... 3.04 - 3.13, 3.28 - 3.29, 3.37 - 3.38
• UTP ... 1.16 - 1.20, 1.23 - 1.24, 1.26 - 1.28, 1.30 - 1.31
• VGA ... 3.15 - 3.16
Cable Cover ... 8.12, 10.12
Cable Entry / Management ... New.6, 1.47 - 1.51, 9.16
Cable Testers ... 8.02 - 8.04
Cable Ties/Clips ... 8.12, 10.12
Cards (Serial/Parallel, PCIe, USB) ... 4.02
Card Readers ... 4.03, 5.10, 5.12 - 5.13
Cases (SSD/HDD, Rack-Mounts) ... 4.03 - 4.06
Ceiling Mounts ... 9.17, 10.11
Centronics Cables ... 3.14
Cleaning Products/Sets ... 1.58, 8.03, 9.22
COMPUTER CABLES, CONNECTORS, ADAPTERS ... 3.02 - 3.60
Connector Casings ... 3.54 - 3.55
Connectors (D-Sub, Modular) ... 3.54 - 3.55
Converters
• Fast- / Gigabit Ethernet ... 1.02, 5.02
• Parallel/Serial ... 3.55 - 3.60
• RJ-45/Fibre ... 1.04 - 1.05
• RS232/RS485 ... 1.13, 3.55 - 3.60
• USB - Audio ... 3.42 - 3.44, 5.14 - 5.15
• USB - VGA/DVI/HDMI/DP ... 3.39 - 3.42, 5.06 - 5.13, 6.02
• USB - SATA ... 3.56 - 3.57
• USB - Serial ... 3.57 - 3.60
Crimping Pliers/Tools ... 8.05 - 8.06
Crossover Cables, Adapter ... 1.21

D

Design Secure UPS ... 7.03
Docking Station (SSD/HDD) ... 4.03
Docking Station Notebook ... 3.38, 5.06 - 5.13
Display Adapters / Cables ... 3.16 - 3.42, 3.34 - 3.41, 5.06 - 5.13
DisplayPort
• Cables ... 3.22 - 3.27, 3.34 - 3.41, 6.06 - 6.07
• Extender ... 6.03
• KVM ... 2.06
• Switch ... 6.10 - 6.11
Display Stands / Digital Signage ... 10.07
DVI
• Cables ... 3.16 - 3.17, 3.30, 3.31
• Splitter ... 6.09

E

Earphones / Headsets ... 6.14
EMC Ferrite Cores ... 3.54
Enclosures SSD/HDD ... 4.03 - 4.04
Ethernet
• Patch Cords ... 1.20 - 1.33
• Converters ... 1.04 - 1.05
• Switches ... 1.03 - 1.07, 1.09 - 1.12
Extensions (USB) ... 3.08 - 3.10

F

Ferrite Cores ... 3.54
Field plugs ... 1.44
Flat/Slim Patch Cables ... 1.24, 1.27 - 1.28
FTP Cables ... 1.16, 1.21, 1.24, 1.27, 1.28
Fiber Optic Adapters ... 1.59
Fiber Optic Jumper Cables ... 1.52 - 1.57
Fiber Optic Accessories ... 1.58 - 1.59, 8.04

G

Gender Changers ... 3.13, 3.54 - 3.55
Gigabit Ethernet Switches ... 1.03 - 1.04, 1.06 - 1.07, 1.10 - 1.12

H

Hard Disk ...
• Enclosures / Housings for SSD/HDD ... 4.03 - 4.04
• Mounting Adapters ... 4.05
Headphones / Headsets ... 6.14
HDMI
• Audio Extractor ... 6.13
• Cables ... 3.17 - 3.21, 3.31 - 3.33, 6.05 - 6.07
• Extender ... 6.03 - 6.07
• KVM ... 2.06 - 2.07
• Switch/Splitter ... 6.09 - 6.12
Holder for Tablets/Smartphones ... 5.16
Hubs USB ... 1.02, 2.10 - 2.14, 3.08 - 3.09, 5.02

I

I/O Cards ... 4.02
Industrial products ... 1.08 - 1.13, 4.05 - 4.06

J

Jumper Cables ... 1.52 - 1.57
Junction Boxes ... 1.45

K

Keyboard Adapters / Cables ... 3.15, 3.55
Keypad ... A.04
KVM
• Consoles ... 1.61, 2.04 - 2.05
• Extender ... 2.07 - 2.09
• Switch ... 2.02 - 2.09
Keystone Jacks / Couplers ... 1.38 - 1.40, 1.42 - 1.46

L

LAN Cables ... 1.16 - 1.19
LCD Monitor Arms ... 9.04 - 9.13
LCD Consoles, KVM ... 1.61, 2.04 - 2.05
Line Secure ... 7.02
Line Interactive ... 7.02 - 7.03
Link Cables, Serial ... 3.14

M

Measuring Instruments ... 8.02 - 8.04
MOBILE COMPUTING ... 5.02 - 5.18
Mobile Racks HDD ... 4.05 - 4.06

Modem Cables 3.14
Modular
• Connectors 1.45
• Couplers ..... 1.38 - 1.40, 1.42 - 1.46
Monitor .....
• Adapter Plates 9.03
• Arms ..... 9.04 - 9.13
• Connection Cables ..... 3.15 - 3.27, 3.30 - 3.33, 3.41 - 3.42, 6.05 - 6.07
• Power Cables ..... 3.48 - 3.53, 7.10 - 7.14
• Stands ..... 9.17 - 9.18, 9.20
Module Frames 1.41
Mouse / Mouse Pads 4.04, 9.02
MPO Cabling System 1.60
MULTIMEDIA ..... 6.02 - 6.14

N

NETWORK COMPONENTS/CABLES ..... 1.02 - 1.62
NewsShop ..... New.2 - New6
Network
• Blank Panels ..... 1.47 - 1.51
• Cabinets 1.62
• Cable Entry / Management ..... 1.47 - 1.51
• Cable Testers ..... 8.02 - 8.05
• Switches ..... 1.03 - 1.07, 1.09 - 1.12
• Tools ..... 8.02 - 8.05, 8.08 - 8.11

O

OFFICE EQUIPMENT / CONSUMABLES ..... 9.02 - 9.22
Optical Fiber Patch Cables ..... 1.52 - 1.57
Organizer Under Desk New.6, 9.16

P

Parallel
• Cables 3.14
• I/O Cards 4.02
Patch
• Panels ..... 1.34 - 1.36
• Cables / Cords ..... New.2, 1.20 - 1.33
PC
• Carts ..... 9.12 - 9.13
• Stands / Holders ..... 9.14 - 9.15
PDU's 7.09
PERIPHERAL DEVICES ..... 4.02 - 4.06
PoE
• Injectors ..... 1.07 - 1.09
• Splitters 1.09
• Switches ..... 1.05 - 1.07, 1.09
Port Blocker USB 3.07
Power
• Cables ..... 3.48 - 3.53, 7.10 - 7.14
• Chargers ..... 7.05 - 7.06, A.09 - A.10
• Cables Accessories 9.16
Printer
• Cables 3.14
• Switches ..... 2.09 - 2.10
• Tables 9.21
Projector Mounts 9.17, 10.11
Pro Secure UPS 7.03

R

RS232
• Adapters/Converters ..... 3.57 - 3.60, 4.02
• Cables ..... 3.14, 3.57 - 3.60

S

SATA Cables ..... 3.46 - 3.48
Security Locks 5.16
Serial Cables 3.14
Serial Cards 4.02
Service Kits ..... 8.02 - 8.05, 8.08 - 8.11
S/FTP Cables ..... 1.17 - 1.19, 1.22, 1.25 - 1.33
Splitter (Video) ..... 6.08 - 6.10
SWITCHBOXES / HUBS ..... 2.02 - 2.14
Switches
• Fast Ethernet/Gigabit Ethernet ..... 1.03 - 1.07, 1.09 - 1.12
• HDMI/DisplayPort ..... 6.10 - 6.12
SellOff ..... A.01 - A.11

T

Tablet Stand 5.16
TEST, MEASUREMENT, TOOLS ..... 8.02 - 8.12
• Thunderbolt 3 ..... 3.24
• Twisted Pair Cables - Overview ..... 1.14 - 1.15
• Tool Kits ..... 8.02 - 8.05, 8.08 - 8.11
TV HOLDERS / FURNITURES ..... 10.02 - 10.12

U

Universal Power Adapter 7.07
UPS SYSTEMS / POWER DISTRIBUTION ..... 7.02 - 7.14
UPS ..... 7.02 - 7.03
USB
• Adapters (Audio, Ethernet, Serial) ..... 1.02, 3.13, 3.37 - 3.38, 3.40, 3.42 - 3.44
• Adapters (Audio, Ethernet, Serial) ..... 5.02 - 5.03, 5.14 - 5.15
• Cables ..... New.2 - New.3, 3.04 - 3.12, 3.28 - 3.29, 5.04 - 5.05
• Card Reader 2.13, 4.03, 5.08, 5.10, 5.12, 5.13, A.04
• Data Blocker 3.07
• Display Adapter / Dock ..... 3.37 - 3.38, 5.06 - 5.13
• Display Cables ..... 3.41 - 3.42
• Extender ..... 3.08 - 3.10
• Gender Changer 3.13, 3.55, 5.03
• Hubs ..... 1.02, 2.11 - 2.14, 3.09, 5.02, 5.06
• Charger ..... 5.16 - 5.18, 7.05 - 7.07
• Switches ..... 2.09 - 2.10
Under Desk Mount Thin Clients ..... New. 6, 9.16
UTP ..... 1.16 - 1.18, 1.20, 1.23 - 1.24, 1.26 - 1.28, 1.30 - 1.31

V

VGA
• Cables ..... 3.15 - 3.16
• Extender 6.02
• Switch/Splitter 6.08
Video
• Extender ..... 6.02 - 6.08
• A/V Modules 6.14
• Splitters ..... 6.08 - 6.10
• Switches ..... 6.10 - 6.12
VESA Adapter 9.03

W

Wall Mounts ..... 9.03 - 9.08, 9.12, 10.02 - 10.07
Wall Mount Boxes 1.37
Wall Mount Cabinets 1.62
Wrist Rests 9.02
Wireless HDMI Audio/Video System 6.04, A.06
Wireless Charger ..... 5.18, A.09 - A.10
Workstation ..... 9.12 - 9.13, 9.20 - 9.21
Workstation Monitor Arm 9.19

Y

Y- Power Cables 3.48, 3.51, 7.12

Cross Reference ▲ Order-No. ⇧ Page

11.01.1xxx	03.14	11.04.557x	03.17	11.99.5537	03.17	12.03.3138	03.38	12.99.3214	03.44	14.99.5034	02.09	17.99.134x	09.18	19.99.153x	03.49	21.15.178x	01.17	21.99.305x	01.45
11.01.3xxx	03.14	11.04.5580	03.19	11.99.554x	03.18	12.03.3139	03.40	12.99.3215	03.37	14.99.5038	02.13	17.99.1500	09.15	19.99.155x	07.13	21.15.185x	01.33	21.99.306x	01.43
11.01.4xxx	03.14	11.04.5581	03.19	11.99.5552	03.17	12.03.3140	03.36	12.99.322x	03.37	14.99.5039	02.13	17.99.1501	09.14	19.99.201x	03.51	21.15.186x	01.33	21.99.870x	01.52
11.01.56xx	03.15	11.04.5584	03.19	11.99.5553	03.17	12.03.3142	03.36	12.99.323x	03.37	14.99.5040	02.13	17.99.1502	09.14	19.99.204x	08.08	21.15.188x	01.18	21.99.871x	01.52
11.01.58xx	03.15	11.04.5586	03.19	11.99.5555	03.16	12.03.3144	03.36	12.99.9xxx	03.13	14.99.5047	02.12	18.01.1xxx	04.04	19.99.207x	03.51	21.15.25xx	01.30	21.99.872x	01.52
11.01.59xx	03.14	11.04.5587	03.18	11.99.5556	03.16	12.03.3146	03.36	13.01.1xxx	08.03	15.06.0xxx	A.04	18.01.202x	09.02	19.99.208x	03.50	21.15.26xx	01.30	21.99.875x	01.53
11.01.60xx	03.14	11.04.5588	03.18	11.99.5557	03.17	12.03.3147	N.05	13.01.3262	08.03	15.06.211x	A.04	18.01.2040	09.02	19.99.2090	03.50	21.15.27xx	01.31	21.99.876x	01.53
11.01.62xx	03.14	11.04.5591	03.19	11.99.5558	03.17	12.03.3151	03.36	13.01.3263	08.04	15.06.219x	04.02	18.01.2041	09.02	19.99.2091	03.50	21.15.28xx	01.31	21.99.877x	01.53
11.01.65xx	03.15	11.04.5592	03.19	11.99.556x	03.16	12.03.3152	03.36	13.01.3264	08.04	15.08.624x	04.03	18.01.2042	09.02	19.99.2092	03.50	21.15.294x	01.30	21.99.882x	01.52
11.01.66xx	03.15	11.04.5593	03.19	11.99.5571	03.18	12.03.3158	03.39	13.01.3266	08.04	15.08.625x	A.04	18.01.2047	04.04	19.99.2094	03.50	21.15.295x	01.30	21.99.883x	01.53
11.01.9xxx	03.14	11.04.5594	03.19	11.99.5574	03.18	12.03.3160	03.36	13.01.3267	08.03	15.99.1xxx	06.14	18.01.2048	09.02	19.99.2095	03.50	21.15.297x	01.31	25.16.8392	01.37
11.02.830x	03.06	11.04.5595	03.16	11.99.5575	03.18	12.03.3161	03.36	13.01.3270	08.03	15.99.2xxx	04.02	18.02.20xx	09.02	19.99.2096	03.50	21.15.298x	01.31	25.16.8398	01.36
11.02.8310	03.04	11.04.5596	03.19	11.99.5576	03.18	12.03.3162	03.36	13.01.3271	08.03	15.99.6xxx	A.05	18.02.29xx	A.04	19.99.2097	07.11	21.15.3xxx	01.28	25.16.848x	01.37
11.02.8311	03.06	11.04.5598	03.16	11.99.5577	03.18	12.03.3163	03.36	13.01.3272	08.03	16.01.3xxx	04.05	18.02.3xxx	09.02	19.99.30xx	05.16	21.15.870x	01.52	25.16.849x	01.36
11.02.8317	03.05	11.04.5599	03.16	11.99.5578	03.19	12.03.3164	03.39	13.01.3273	08.03	16.01.412x	04.03	19.03.xxxx	09.22	19.99.3230	07.05	21.15.871x	01.52	25.16.85xx	01.37
11.02.8318	03.06	11.04.560x	03.22	11.99.558x	03.19	12.03.317x	03.31	13.01.3274	08.03	16.01.4145	03.47	19.06.1000	08.12	19.99.3235	08.12	21.15.872x	01.52	25.99.5xxx	08.12
11.02.8321	03.05	11.04.561x	03.26	11.99.559x	03.16	12.03.3200	03.38	13.01.3275	08.03	16.01.4146	04.04	19.06.1008	08.07	19.99.3236	10.12	21.15.875x	01.53	25.99.8200	06.14
11.02.8322	03.05	11.04.562x	03.22	11.99.5601	03.22	12.03.3205	03.38	13.01.3276	08.04	16.01.4147	04.04	19.06.1020	08.05	19.99.3237	10.12	21.15.876x	01.53	25.99.8201	06.14
11.02.8325	03.12	11.04.5634	03.25	11.99.5602	03.22	12.03.3209	03.43	13.01.3277	08.04	16.99.41xx	04.04	19.06.1021	08.06	19.99.3420	07.08	21.15.877x	01.53	25.99.8202	06.14
11.02.8326	03.05	11.04.5635	03.25	11.99.5603	03.22	12.03.3210	03.38	13.01.3278	08.04	16.99.42xx	04.03	19.06.1029	08.06	19.99.3424	07.02	21.15.878x	01.55	25.99.8203	06.14
11.02.8327	A.01	11.04.5636	03.25	11.99.5604	03.22	12.03.3211	03.38	13.01.3282	08.04	17.01.1085	09.21	19.06.103x	08.06	19.99.3426	07.02	21.15.879x	01.55	25.99.8204	06.14
11.02.8328	03.07	11.04.5637	03.25	11.99.5605	03.22	12.03.3212	03.42	13.01.3283	08.04	17.01.1086	09.19	19.06.104x	08.06	19.99.3428	07.02	21.15.882x	01.53	25.99.8205	06.14
11.02.8329	03.05	11.04.5638	03.25	11.99.5608	03.26	12.03.3213	03.43	13.01.3284	08.04	17.01.1087	09.21	19.06.202x	08.10	19.99.5xxx	08.02	21.15.883x	01.53	25.99.8206	06.14
11.02.833x	03.07	11.04.5639	03.30	11.99.5609	03.22	12.03.3214	03.43	13.01.3287	08.03	17.01.1089	09.21	19.06.2031	08.11	21.13.10xx	01.05	21.15.884x	01.56	25.99.8207	01.42
11.02.870x	03.04	11.04.5640	03.25	11.99.561x	03.26	12.03.3215	03.38	13.01.3288	08.04	17.02.1545	09.20	19.06.2032	08.08	21.13.1136	01.12	21.15.885x	01.54	25.99.8208	01.42
11.02.871x	03.04	11.04.5641	03.25	11.99.562x	03.22	12.03.3216	03.42	13.01.3290	08.04	17.02.1547	09.21	19.06.2033	08.09	21.13.1137	01.12	21.15.886x	01.54	25.99.8209	01.42
11.02.872x	03.06	11.04.5644	03.30	11.99.563x	03.25	12.03.3217	03.42	13.01.3291	08.03	17.02.1548	N.06	19.06.2034	08.05	21.13.1138	01.13	21.15.887x	01.54	25.99.84xx	01.37
11.02.873x	03.04	11.04.5645	03.30	11.99.568x	03.20	12.03.3218	03.42	13.01.333x	A.08	17.02.1549	N.06	19.06.2040	08.11	21.13.1140	01.11	21.15.888x	01.54	25.99.8790	08.05
11.02.875x	03.04	11.04.5646	03.30	11.99.569x	03.21	12.03.3220	03.38	13.01.334x	08.03	17.02.3370	09.17	19.06.2045	08.10	21.13.1141	01.11	21.15.889x	01.54	25.99.8791	08.05
11.02.8760	03.04	11.04.5647	03.30	11.99.570x	03.18	12.03.3221	03.38	13.01.335x	08.03	17.02.3375	09.17	19.06.2047	08.10	21.13.1142	01.11	21.15.926x	01.54	25.99.8792	08.06
11.02.8761	03.04	11.04.5648	03.30	11.99.571x	03.18	12.03.3222	03.43	13.01.3371	08.03	17.02.3376	09.18	19.06.2049	08.11	21.13.1143	01.11	21.15.927x	01.55	25.99.8793	08.06
11.02.8765	A.01	11.04.5649	03.30	11.99.572x	03.18	12.03.3223	03.33	13.01.3372	08.04	17.03.00xx	09.07	19.06.208x	A.08	21.13.1147	01.11	21.15.947x	01.56	25.99.8799	08.06
11.02.877x	03.06	11.04.565x	03.15	11.99.573x	03.18	12.03.3224	03.38	13.01.3377	08.04	17.03.01xx	09.16	19.07.1051	05.17	21.13.1149	01.12	21.15.948x	01.57	26.11.030x	01.36
11.02.878x	A.02	11.04.566x	03.15	11.99.574x	03.18	12.03.3225	03.38	13.01.3379	08.03	17.03.110x	09.03	19.07.1053	A.10	21.13.115x	01.10	21.15.949x	01.56	26.11.031x	01.36
11.02.879x	03.28	11.04.567x	03.15	11.99.576x	03.22	12.03.3226	03.38	13.01.338x	08.02	17.03.111x	09.11	19.07.1054	05.18	21.13.1161	01.10	21.15.95xx	01.57	26.11.032x	01.34
11.02.8802	03.28	11.04.568x	03.20	11.99.577x	03.27	12.03.3227	03.38	13.03.xxxx	08.04	17.03.1122	09.08	19.07.1055	A.10	21.13.1162	01.11	21.17.00xx	01.59	26.11.0337	01.39
11.02.8803	03.28	11.04.569x	03.33	11.99.578x	03.27	12.03.3228	03.38	13.99.3001	08.02	17.03.1123	09.05	19.07.106x	07.04	21.13.1172	01.09	21.17.01xx	01.59	26.11.0339	01.42
11.02.8805	03.28	11.04.570x	03.18	11.99.5790	03.27	12.03.3230	03.38	13.99.3002	08.02	17.03.1124	09.05	19.07.107x	07.04	21.13.1173	01.09	21.17.0320	01.40	26.11.0342	01.37
11.02.8808	03.04	11.04.571x	03.18	11.99.5791	03.27	12.03.3231	03.40	13.99.3003	08.02	17.03.1125	09.05	19.07.160x	07.05	21.13.1174	01.05	21.17.0321	01.40	26.11.0343	01.37
11.02.8818	03.04	11.04.573x	03.18	11.99.5792	03.27	12.03.3232	03.40	13.99.3005	01.58	17.03.1126	09.05	19.07.1620	07.09	21.13.1181	01.09	21.17.0323	01.44	26.11.0347	01.34
11.02.8819	03.28	11.04.574x	03.18	11.99.5793	03.27	12.03.3233	03.40	13.99.3006	01.58	17.03.1127	09.15	19.07.1621	07.09	21.13.1188	01.08	21.17.035x	01.58	26.11.0349	01.34
11.02.882x	03.28	11.04.576x	03.22	11.99.5795	03.27	12.03.7xxx	03.54	13.99.3007	01.58	17.03.1128	09.15	19.07.1622	07.09	21.13.1191	01.07	21.17.3001	01.45	26.11.0351	01.35
11.02.883x	03.04	11.04.5771	03.26	11.99.5796	03.27	12.04.107x	03.10	13.99.3008	08.09	17.03.1129	09.15	19.07.1623	07.09	21.13.1198	01.08	21.17.3002	01.45	26.11.0352	01.38
11.02.8845	03.04	11.04.5772	03.26	11.99.5797	03.27	12.04.1085	02.10	13.99.3009	A.11	17.03.1130	09.15	19.07.1624	07.09	21.13.1199	01.08	21.17.3003	01.43	26.11.0353	01.37
11.02.8849	02.11	11.04.5773	03.26	11.99.5798	03.23	12.04.1086	02.10	13.99.3010	A.11	17.03.1131	09.15	19.07.1625	07.08	21.13.12xx	01.07	21.17.3004	01.43	26.11.0355	01.35
11.02.8867	03.04	11.04.5774	03.26	11.99.580x	03.26	12.04.1088	03.08	13.99.3011	01.58	17.03.1132	09.09	19.07.1626	07.09	21.13.13xx	01.42	21.17.3006	01.43	26.11.0356	01.37
11.02.8868	03.04	11.04.5775	03.26	11.99.581x	03.23	12.04.1089	03.08	13.99.3013	01.58	17.03.1133	09.09	19.07.1627	07.09	21.14.31xx	01.03	21.17.303x	01.45	26.11.0357	01.37
11.02.8869	03.11	11.04.5776	03.27	11.99.582x	03.41	12.04.1091	03.08	14.01.231x	02.10	17.03.1134	09.09	19.07.1628	07.09	21.14.34xx	01.12	21.17.304x	01.45	26.11.0358	01.37
11.02.8870	03.11	11.04.5777	03.27	11.99.583x	03.41	12.04.1096	03.09	14.01.233x	A.01	17.03.1136	09.15	19.07.1629	07.09	21.14.350x	01.04	21.17.3060	01.43	26.11.0359	01.38
11.02.8871	03.11	11.04.5779	03.27	11.99.584x	03.41	12.04.1097	02.12	14.01.30xx	02.08	17.03.1137	09.15	19.07.207x	03.50	21.14.351x	01.03	21.17.3061	01.43	26.11.0360	01.38
11.02.8872	03.11	11.04.578x	03.27	11.99.59xx	03.21	12.04.11xx	03.09	14.01.323x	02.02	17.03.1145	09.14	19.07.2093	03.50	21.14.3521	01.03	21.17.3062	01.43	26.11.0361	01.35
11.02.8873	03.11	11.04.5790	03.27	11.99.6xxx	03.14	12.99.0xxx	01.43	14.01.324x	02.07	17.03.1147	09.08	19.07.2096	03.50	21.14.3522	01.03	21.17.3063	01.43	26.11.0362	01.35
11.02.8874	03.11	11.04.5791	03.27	11.99.830x	03.06	12.99.101x	03.60	14.01.332x	02.06	17.03.1148	09.08	19.07.2097	07.11	21.14.3523	01.04	21.17.3065	01.45	26.11.0367	01.39
11.02.8875	03.11	11.04.5792	03.27	11.99.831x	03.06	12.99.103x	06.02	14.01.333x	02.06	17.03.1149	09.08	19.08.1010	03.50	21.14.353x	01.03	21.17.3066	01.45	26.11.037x	01.40
11.02.8876	03.11	11.04.5793	03.27	11.99.8321	03.05	12.99.1041	05.06	14.01.336x	A.01	17.03.115x	09.14	19.08.1011	03.50	21.15.0001	01.19	21.17.3067	01.32	26.11.038x	01.33
11.02.8877	03.11	11.04.5795	03.27	11.99.8322	03.05	12.99.1042	05.09	14.01.340x	A.05	17.03.1162	09.06	19.08.1012	03.50	21.15.0002	01.19	21.17.308x	01.33	26.30.0000	01.49
11.02.8878	03.29	11.04.5796	03.27	11.99.8325	03.12	12.99.1043	05.08	14.01.3414	A.06	17.03.1163	09.06	19.08.1013	03.50	21.15.0003	01.19	21.44.xxxx	N.02	26.30.0001	01.49
11.02.8879	03.29	11.04.5797	03.27	11.99.8326	03.05	12.99.1049	03.56	14.01.3416	06.14	17.03.1165	09.06	19.08.1018	03.49	21.15.0004	01.19	21.99.010x	01.21	26.30.0009	01.47
11.02.888x	A.02	11.04.5798	03.23	11.99.87xx	03.04	12.99.1051	03.57	14.01.3417	06.03	17.03.1166	09.06	19.08.1022	03.51	21.15.0005	01.33	21.99.011x	01.21	26.50.0xxx	01.61
11.02.8900	03.29	11.04.580x	03.20	11.99.880x	03.04	12.99.1052	03.56	14.01.3441	03.45	17.03.1169	10.03	19.08.1023	03.51	21.15.0007	01.28	21.99.012x	01.21	26.50.5xxx	01.51
11.02.8902	03.29	11.04.5810	03.23	11.99.881x	03.04	12.99.1072	03.55	14.01.3442	06.13	17.03.1174	09.13	19.08.1028	03.49	21.15.0009	01.16	21.99.019x	01.16	26.99.00xx	01.51
11.02.8903	03.29	11.04.5811	03.23	11.99.883x	03.04	12.99.1073	03.55	14.01.3443	A.06	17.03.1175	09.13	19.08.103x	03.49	21.15.001x	01.16	21.99.02xx	01.23	26.99.012x	01.61
11.02.8908	03.04	11.04.5812	03.23	11.99.884x	03.04	12.99.1074	03.56	14.01.3451	06.06	17.03.1178	09.08	19.08.1110	03.51	21.15.002x	01.16	21.99.03xx	01.22	26.99.013x	01.61
11.02.8911	03.28	11.04.5813	03.23	11.99.886x	03.11	12.99.1075	03.55	14.01.3452	06.06	17.03.1180	09.03	19.08.1111	03.51	21.15.010x	01.21	21.99.050x	01.20	26.99.014x	01.62
11.02.8912	03.28	11.04.5814	03.25	11.99.887x	03.11	12.99.108x	03.08	14.01.3453	06.06	17.03.1181	09.03	19.08.1118	03.49	21.15.0110	01.21	21.99.051x	01.20	26.99.015x	01.62
11.02.8913	03.28	11.04.5815	03.25	11.99.890x	03.04	12.99.1100	03.08	14.01.3454	06.06	17.03.1185	09.15	19.08.150x	03.49	21.15.0115	01.21	21.99.052x	01.20	26.99.016x	02.04
11.02.8918	03.04	11.04.5817	03.25	11.99.891x	03.04	12.99.1105	01.02	14.01.3458	06.05	17.03.119x	09.05	19.08.151x	03.49	21.15.0119	01.16	21.99.059x	01.16	26.99.019x	02.04
11.02.892x	03.28	11.04.5818	03.25	11.99.893x	03.04	12.99.1107	01.02	14.01.3459	06.08	17.03.123x	09.09	19.08.152x	03.49	21.15.0120	01.21	21.99.06xx	01.59	26.99.02xx	01.50
11.02.893x	03.04	11.04.582x	03.41	11.99.894x	03.04	12.99.1109	02.14	14.01.3461	06.04	17.03.1250	10.07	19.08.153x	03.49	21.15.0121	01.16	21.99.07xx	01.25	26.99.0300	01.50
11.02.894x	03.04	11.04.583x	03.41	11.99.896x	03.04	12.99.1110	03.08	14.01.3462	06.04	17.03.1251	10.07	19.08.155x	07.13	21.15.013x	01.21	21.99.080x	01.25	26.99.0301	01.47
11.02.896x	03.04	11.04.5840	03.41	11.99.897x	03.11	12.99.1111	03.08	14.01.3464	06.05	17.03.1252	10.06	19.08.156x	07.13	21.15.014x	01.21	21.99.081x	01.25	26.99.0302	01.47
11.02.897x	03.11	11.04.5841	03.41	11.99.899x	03.10	12.99.1112	03.08	14.01.3465	06.05	17.03.1260	10.10	19.08.310x	10.12	21.15.015x	01.21	21.99.082x	01.27	26.99.0303	01.47
11.02.900x	03.13	11.04.5842	03.41	11.99.901x	03.11	12.99.1113	03.08	14.01.3468	06.04	17.03.1261	10.10	19.08.311x	10.12	21.15.016x	01.21	21.99.083x	01.27	26.99.0304	01.47
11.02.9010	03.11	11.04.5843	03.41	11.99.903x	03.13	12.99.1114	03.08	14.01.3469	06.04	17.03.1262	10.09	19.08.316x	08.12	21.15.018x	01.21	21.99.084x	01.29	26.99.0305	01.47
11.02.9011	03.11	11.04.5844	03.33	11.99.905x	03.11	12.99.1115	01.02	14.01.3473	06.03	17.03.1302	09.16	19.08.325x	A.08	21.15.02xx	01.21	21.99.085x	01.32	26.99.0306	01.47
11.02.9012	03.29	11.04.5845	03.41	11.99.908x	03.12	12.99.1116	01.02	14.01.3474	06.07	17.03.1303	09.16	19.08.327x	08.12	21.15.030x	01.22	21.99.086x	01.27	26.99.0308	01.49
11.02.9013	03.29	11.04.5846	03.41	12.01.1xxx	03.54	12.99.1117	05.12	14.01.348x	06.07	17.03.1304	09.16	19.11.1010	A.09	21.15.0310	01.22	21.99.087x	01.26	26.99.0310	01.49
11.02.9014	03.10	11.04.5847	03.33	12.01.4xxx	03.55	12.99.112x	03.09	14.01.349x	06.07	17.03.1305	N.06	19.11.1011	05.18	21.15.0315	01.22	21.99.088x	01.19	26.99.0311	01.48
11.02.9015	03.13	11.04.5848	03.33	12.02.1001	03.59	12.99.1131	03.37	14.01.353x	06.08	17.05.xxxx	09.15	19.11.1012	A.09	21.15.0319	01.16	21.99.089x	01.17	26.99.0312	01.48
11.02.902x	03.06	11.04.5849	03.33	12.02.1003	03.59	12.99.1132	A.05	14.01.3550	A.06	17.99.10xx	A.08	19.11.1014	A.09	21.15.0320	01.22	21.99.090x	01.23	26.99.0313	01.50
11.02.9030	03.13	11.04.585x	03.19	12.02.1004	03.59	12.99.1133	03.37	14.01.3553	06.09	17.99.1100	09.17	19.11.1018	05.17	21.15.0321	01.16	21.99.091x	01.23	26.99.0314	01.50
11.02.9031	03.13	11.04.5860	A.02	12.02.1005	03.60	12.99.115x	03.55	14.01.3555	06.09	17.99.1102	09.17	19.11.102x	05.17	21.15.033x	01.22	21.99.095x	01.23	26.99.0315	01.50
11.02.9035	03.06	11.04.5866	03.24	12.02.1008	03.60	12.99.116x	03.58	14.01.3568	06.10	17.99.1107	10.11	19.11.1032	05.17	21.15.034x	01.22	21.99.096x	01.24	26.99.0316	01.50
11.02.9036	03.06	11.04.5867	03.24	12.02.101x	03.59	12.99.2xxx	03.13	14.01.3569	06.12	17.99.1120	09.04	19.11.1034	05.18	21.15.035x	01.22	21.99.097x	01.24	26.99.0317	01.51
11.02.9037	03.06	11.04.5868	03.24	12.02.1020	05.09	12.99.3113	03.34	14.01.3572	06.11	17.99.1121	09.04	19.11.106x	07.06	21.15.036x	01.22	21.99.099x	01.17	26.99.0318	01.47
11.02.904x	03.24	11.04.587x	03.17	12.02.1022	05.12	12.99.3114	03.34	14.01.3574	06.11	17.99.1123	09.09	19.11.109x	07.07	21.15.038x	01.22	21.99.102x	01.23	26.99.0319	01.51
11.02.9052	03.11	11.04.588x	03.22	12.02.1028	03.60	12.99.3115	03.34	14.01.3575	06.11	17.99.1125	09.04	19.40.10xx	07.03	21.15.050x	01.20	21.99.103x	01.23	26.99.0320	01.51
11.02.9053	03.11	11.04.589x	03.31	12.02.1029	03.60	12.99.3116	03.34	14.01.3579	06.12	17.99.1126	09.04	19.40.11xx	07.02	21.15.0510	01.20	21.99.104x	01.23	26.99.0321	01.48
11.02.9054	03.10	11.04.590x	03.21	12.02.103x	05.10	12.99.3117	03.39	14.01.358x	06.10	17.99.1129	09.04	19.40.12xx	07.03	21.15.0511	01.16	21.99.105x	01.23	26.99.0328	01.34
11.02.906x	03.28	11.04.591x	03.20	12.02.1041	05.12	12.99.3119	03.39	14.01.359x	A.07	17.99.1132	09.09	19.40.2xxx	07.02	21.15.0512	01.16	21.99.1061	01.23	26.99.0329	01.34
11.02.907x	03.12	11.04.592x	03.30	12.02.1042	05.08	12.99.3120	03.34	14.02.5011	02.11	17.99.1133	09.09	19.49.xxxx	07.02	21.15.0515	01.20	21.99.1062	01.23	26.99.033x	01.41
11.02.908x	03.12	11.04.594x	03.21	12.02.1043	03.56	12.99.3123	03.34	14.02.5013	02.11	17.99.1134	09.11	19.99.010x	04.06	21.15.0518	01.16	21.99.1063	01.23	26.99.0345	01.48
11.03.10xx	03.48	11.04.595x	03.41	12.02.1049	03.58	12.99.3125	03.35	14.02.5015	02.12	17.99.1136	09.09	19.99.0114	04.06	21.15.0519	01.20	21.99.1064	01.23	26.99.0346	01.48
11.03.154x	03.47	11.04.596x	03.24	12.02.107x	03.56	12.99.3126	03.35	14.02.502x	02.11	17.99.1139	09.12	19.99.0115	04.05	21.15.0520	01.16	21.99.1065	01.23	26.99.0349	01.34
11.03.155x	03.46	11.04.597x	03.26	12.02.109x	03.58	12.99.3128	03.35	14.02.5035	02.14	17.99.1140	09.14	19.99.0116	04.06	21.15.0521	01.20	21.99.1066	01.23	26.99.0353	01.35
11.03.156x	03.47	11.04.598x	03.23	12.02.110x	01.02	12.99.3129	03.35	14.02.5036	02.14	17.99.1141	09.04	19.99.0117	04.06	21.15.0522	01.20	21.99.1069	01.04	26.99.0354	01.35
11.04.1xxx	03.54	11.04.599x	03.27	12.02.1110	05.02	12.99.3130	03.35	14.02.5037	02.12	17.99.1143	10.03	19.99.100x	08.08	21.15.0523	01.20	21.99.1070	01.04	26.99.0355	01.34
11.04.51xx	03.16	11.05.xxxx	03.54	12.02.1111	05.02	12.99.3133	03.34	14.02.5038	02.14	17.99.1144	10.03	19.99.1011	A.10	21.15.0524	01.20	21.99.1071	01.23	26.99.0357	01.35
11.04.52xx	03.15	11.09.42xx	03.44	12.02.1115	A.03	12.99.3134	03.34	14.02.5039	02.14	17.99.1145	09.10	19.99.1016	03.49	21.15.0525	01.20	21.99.1072	01.23	26.99.0360	01.35
11.04.53xx	03.15	11.09.43xx	03.45	12.02.1116	A.02	12.99.3135	03.34	14.02.504x	02.14	17.99.1147	09.10	19.99.1017	03.49	21.15.053x	01.20	21.99.1073	01.23	26.99.0361	01.35
11.04.54xx	03.16	11.09.443x	06.13	12.02.1117	05.13	12.99.3136	03.34	14.02.505x	02.13	17.99.1148	10.03	19.99.1018	03.49	21.15.054x	01.20	21.99.1074	01.23	26.99.0362	01.34
11.04.550x	03.32	11.09.444x	03.45	12.02.1118	05.10	12.99.3137	03.34	14.99.2xxx	02.09	17.99.1150	05.16	19.99.1019	03.49	21.15.055x	01.20	21.99.1075	01.23	26.99.0363	01.38
11.04.5510	03.32	11.09.45xx	03.45	12.02.1119	05.11	12.99.3138	03.34	14.99.30xx	02.09	17.99.1151	05.16	19.99.1022	03.51	21.15.056x	01.20	21.99.1076	01.23	26.99.0366	01.39
11.04.5511	03.30	11.09.47xx	03.44	12.02.112x	03.33	12.99.3139	03.34	14.99.322x	02.03	17.99.1154	A.11	19.99.1028	03.49	21.15.059x	01.20	21.99.108x	01.23	26.99.0370	01.44
11.04.5512	03.30	11.44.55xx	N.03	12.02.113x	03.38	12.99.3142	03.35	14.99.325x	02.03	17.99.1155	09.09	19.99.1030	07.04	21.15.082x	01.26	21.99.110x	01.60	26.99.0371	01.44
11.04.5513	03.30	11.44.56xx	N.04	12.02.1160	03.58	12.99.3143	03.35	14.99.326x	02.02	17.99.1156	A.11	19.99.1038	05.16	21.15.083x	01.26	21.99.119x	01.06	26.99.0372	01.44
11.04.5514	03.30	11.44.573x	N.03	12.02.1161	03.57	12.99.3144	03.34	14.99.332x	02.07	17.99.1157	A.11	19.99.1039

General Conditions of Sale and Supply

1. General

1.1 A contract is considered to be concluded with a written quotation, an order confirmation or when the goods are despatched and invoiced by SECOMP International AG. By accepting the delivery, the customer agrees to the conditions of SECOMP International AG. Divergent conditions have to be stipulated in writing.

1.2 Orders shall only become binding upon SECOMP International AG after it has issued a written confirmation of order.

1.3 SECOMP International AG - reserves the right to amend typing errors/mistakes to price lists and technical data at any time.

2. Prices

Prices shall be deemed net plus V.A.T., transportation and packaging charges, provided that alternative conditions have not already been agreed. SECOMP International AG however hereby reserves the right to make price adjustments to cover definite increases in costs for example Goods and Material.

3. Delivery period

The delivery period shall be the date in the contract of sale and will be extended should difficulties arise that may have been caused by an act of god such as war, epidemics and among other things storm and tempest.

4. Despatch

All deliveries shall be effected for the account and the risk of the customer. Any complaints concerning damage, loss or delay are to be reported to SECOMP International AG within 8 days of the receipt of the consignment. But complaints concerning any faulty packaging shall be rendered on the same day as the receipt of the consignment.

5. Works deliveries

Should the consignment and invoicing be directly affected by the suppliers of SECOMP International AG, the conditions of sale and supply of that particular supplier shall be valid for customers in respect of that particular contract. In such cases, these present conditions of sale and supply shall have no validity and damage indemnity claims or claims of any other nature cannot be made enforceable against SECOMP International AG hereunder.

6. Return of goods and materials

The return of goods and materials shall require the written permission of SECOMP International AG and may only be effected if the goods and materials are in re-sellable condition and still in their original packaging, and only then if such are usually maintained in stock by SECOMP International AG. A copy of the delivery note or the invoice must be enclosed. Returns without either a copy of the delivery note or the invoice will not be accepted. An appropriate surcharge will be applied by SECOMP International AG on the purchaser to defray the cost of any inconvenience caused.

7. Settlement

Invoices are to be settled within 30 days net without any deductions. Purchasers will be charged the usual bank overdraft rate of interest in respect of overdue payments.

8. Retention of ownership rights

All goods and materials supplied shall remain the property of SECOMP International AG until full payment of the debited invoice amount has been received.

9. Warranty

SECOMP International AG will grant a warranty for products for a period of 24 months for the ROLINE brand and 12 months for all others products from the date of delivery in respect of any evidenced faulty workmanship and materials. Should a delivered consignment prove to be contrary to contract upon inspection, the customer shall grant SECOMP International AG the opportunity hereunder of removing the fault or else the customer may demand replacement. Should the supply or delivery of any improvement or replacement not prove possible, the customer may choose between having the purchase price reduced or in demanding the contract of sale to be rescinded (conversion).

Damage resulting from natural wear and tear, an act of God or non compliance with the operating instructions shall be excluded from the warranty as well as mechanical interference by the customer or by third parties with products of SECOMP International AG without its written permission. No liability will be accepted for defects, damage or injury caused due to installation not carried out in accordance with the manufacturer's installation instructions.

10. Data Protection

10.1 For a fast and correct handling of your order there will be saved data in our IT – system. The processing of the delivered data is done following the EU-GDPR and the tele-media law.

10.2 In the scope of the credit check and the credit monitoring we are exchanging data with a credit agency.

11. Cancellation

Cancellation of orders shall only be possible hereunder with the written approval of SECOMP International AG. Any costs which have already been incurred or price increases as a result of reduction in amounts ordered shall be for the account of the purchaser. Partial supplies of an order contracted upon call shall be claimed within the agreed supply and delivery periods otherwise SECOMP International AG may cause the relative consignment and invoice billing therefore to be made.

12. Place of jurisdiction

The place of jurisdiction shall be Zürich. Legal relationship hereunder shall be subject to Swiss Law.

August 2020

SECOMP



SECOMP International AG
Grindelstrasse 6
8303 Bassersdorf
Switzerland

PHONE +41 44 511 87 62
FAX +41 44 511 87 07
E-MAIL info@secomp-international.com

www.secomp-international.com



WAREHOUSE
SECOMP International
Einsteinstrasse 17 - 23
76275 Ettlingen
Germany



SECOMP Germany
Einsteinstrasse 17 - 23
76275 Ettlingen
Germany

PHONE +49 7243 383 111
FAX +49 7243 383 222
E-MAIL info@secomp.de

www.secomp.de



SECOMP Switzerland
Grindelstrasse 6
8303 Bassersdorf
Switzerland

PHONE +41 44 511 87 00
FAX +41 44 511 87 05
E-MAIL info@secomp.ch

www.secomp.ch



SECOMP France
10, avenue Graham Bell, Bâtiment H Lot B4
77600 Bussy-Saint-Georges
France

PHONE +33 164 80 92 30
FAX +33 164 80 92 40
E-MAIL info@secomp.fr

www.secomp.fr



SECOMP Netherlands
Christiaan Huygensweg 38 H
3225 LD Hellevoetsluis
Netherlands

PHONE +31 181 390 030

E-MAIL info@secomp.nl

www.secomp.nl



SECOMP Czechia
U Vinných sklepů 7
190 00 Praha 9 - Vysočany
Czech Republic

PHONE +420 281 861 849
FAX +420 281 862 729
E-MAIL info@secomp.cz

www.secomp.cz